PUBLIC DOCUMENT

112(g) Case-by-Case MACT Analysis for the Lithium Ion Battery Plant

BASF Corporation – Elyria, Ohio

April 9, 2014

www.erm.com

BASF
The Chemical Company

ERM

The world's leading sustainability consultancy

TABLE OF CONTENTS

EXECUTIVE SUMMARY *E-1*

1 INTRODUCTION *1*

1.1 FACILITY BACKGROUND *1*

1.2 PROCEDURAL REQUIREMENTS FOR A CASE-BY-CASE MACT DETERMINATION *2*

1.3 OVERVIEW OF BASF CASE-BY-CASE MACT ANALYSIS METHODOLOGY *3*

2 LITHIUM ION BATTERY CASE-BY-CASE MACT CONSIDERATIONS *5*

2.1 LIB PLANT PROCESS OVERVIEW *5*

2.2 LIB PLANT AIR CAPTURE AND FLOW SCHEMES *8*

2.3 LIB PLANT EMISSION CALCULATIONS *10*

3 EVALUATION OF AVAILABLE CONTROL TECHNOLOGIES *14*

3.1 SUMMARY OF AVAILABLE CONTROL TECHNOLOGIES *15*

3.1.1 Baghouse/Fabric Filter *16*

3.1.2 Electrostatic Precipitator *17*

3.1.3 Cyclone *18*

3.1.4 Extended Media *18*

3.2 DATA AVAILABLE FROM THE USEPA CONTROL TECHNOLOGY CENTER *19*

4 EVALUATION OF SIMILAR SOURCES *21*

4.1 SIMILAR SOURCES WITHIN THE LIB INDUSTRY *22*

4.2 SUMMARY OF CONTROL TECHNOLOGY DETERMINATIONS DOCUMENTED IN USEPA'S RACT/BACT/LAER CLEARINGHOUSE FOR SIMILAR SOURCES *24*

4.3 REGULATIONS FOR SIMILAR SOURCES *26*

PUBLIC DOCUMENT

5 CASE-BY-CASE MACT DETERMINATION 29

5.1 IDENTIFIED CONTROL TECHNOLOGY THAT ACHIEVES THE MAXIMUM DEGREE OF HAP EMISSION REDUCTION 29

5.2 PROPOSED EMISSION LIMITATION 29

5.3 DISCUSSION OF OTHER ASPECTS OF CASE-BY-CASE MACT 30

5.3.1 Identification of Fabric Filter as MACT 30

5.3.2 Form of the Proposed Emission Limitation 30

5.4 PROPOSED OPERATIONAL/MONITORING STANDARDS 32

6 CONCLUSIONS 34

APPENDIX A – CASE-BY-CASE MACT REGULATIONS A-1

APPENDIX B – SIMILAR SOURCE SEARCH RESULTS B-1

APPENDIX C – RBLC SEARCH RESULTS C-1

APPENDIX D – CONTROL EQUIPMENT DESIGN DOCUMENTATION D-1

PUBLIC DOCUMENT

LIST OF FIGURES

Figure 1. Process flow diagram for the BASF Lithium Ion Battery Plant. 7

LIST OF TABLES

Table 1. Information Requirements to Support a Case-by-Case MACT Determination as Described in 40 CFR §63.43(e) 3

Table 2. Summary of Emission Points..... 6

Table 3. PM Capture and Filter Design Parameters for HAP-containing Process Equipment..... 9

Table 4. Summary of LIB Plant Potential Uncontrolled and Controlled Emissions..... 12

Table 5. Summary of PM and PM-HAP Control Technologies and Control Efficiencies..... 15

Table 6. Gas-to-Cloth Design Ratios for Pulse-jet Fabric Filters 17

Table 7. Similar Sources at Permitted Battery Material Manufacturers and Battery Assembly Facilities..... 23

Table 8. Summary of Control Technology Determinations Found in RBLC for Similar Sources 26

Table 9. Summary of PM and PM-HAP Emission Standards 28

PUBLIC DOCUMENT

EXECUTIVE SUMMARY

This document serves as the BASF Corporation's (BASF) 112(g) case-by-case maximum achievable control technology (MACT) analysis and application for its lithium ion battery (LIB) plant at the Elyria, Ohio, facility. The Ohio Environmental Protection Agency (OEPA) requested that BASF conduct a case-by-case analysis to propose a MACT emission limit or standard because the LIB plant is a new major source of hazardous air pollutants (HAP) and not specifically regulated or exempted from regulation under another subpart of 40 CFR Part 63.

The analysis was conducted in accordance with the requirements specified in 40 CFR Part 63, §63.40 through §63.44. Various sources of information were investigated to ensure that all possible control strategies were identified that could feasibly be applied to the LIB plant operations to achieve the maximum degree of emissions reduction. The relevant information sources used in this analysis included sources recommended by OEPA and other industry resources.

Review of the available information with respect to control technologies concludes that a new baghouse/fabric filter will operate with a higher control efficiency than a wet scrubber or cyclone, and as good, if not better, than a new electrostatic precipitator (ESP). Further consideration of control technology for this case-by-case MACT could then be limited to either a fabric filter or ESP.

To evaluate the control technologies employed by similar sources, a nationwide control technology search was conducted. The nationwide control technology search included review of available air permits for facilities identified to have manufacturing operations similar to the LIB plant (i.e., battery material manufacturers and battery assemblers in the electric drive vehicle and hybrid-electric vehicle industry). As part of this search, the RACT/BACT/LAER Clearinghouse (RBLC) database also was queried for all PM determinations made within the past 5 years. These two searches both lead to the conclusion that the best controlled similar source employs a fabric filter. A detailed review of the promulgated MACT standards in 40 CFR Part 63 revealed that no similar source must achieve a greater degree of HAP emission reduction than identified in the nationwide control technology review.

In accordance with 40 CFR 63.43(e), BASF proposes to use fabric filters for particulate matter (PM) and PM-HAP emission control on all LIB plant process operations except the kilns. PM emissions from the kilns are

PUBLIC DOCUMENT

inherently low and therefore, no additional control is proposed for the kilns. The proposed emission limitation for the LIB plant takes the form of an equipment/operational standard. This approach to a proposed emission limitation is consistent with, and supported by, both the regulatory history of case-by-case MACT and specific instructions from the OEPA. Several specific operational/monitoring standards also are proposed to demonstrate continuous compliance with the proposed equipment/operational standard.

PUBLIC DOCUMENT

1 INTRODUCTION

This document serves as the BASF Corporation's (BASF) 112(g) case-by-case maximum achievable control technology (MACT) analysis and application for its lithium ion battery (LIB) plant at the Elyria, Ohio, facility. This analysis is being submitted in conjunction with the permit to install (PTI) applications (initial application A0045081 and two subsequent applications A0046796 and A0047014), previously submitted for the LIB plant to the Ohio Environmental Protection Agency (OEPA). Standards promulgated pursuant to Section 112(g) of the Clean Air Act Amendments of 1990 (CAAA) regulate constructed (i.e., new) and reconstructed major sources of HAPs and consist of five standards under 40 CFR Part 63, §63.40 through §63.44. Appendix A contains the text of these standards. Section 63.43 requires that an application for a case-by-case MACT determination be submitted to the permitting authority as part of the construction permitting process.

1.1 FACILITY BACKGROUND

BASF began construction on the new Elyria, Ohio, cathode material manufacturing operations on November 28, 2011. The new operations were designed to produce nickel/manganese/cobalt (NMC) cathode material for lithium ion batteries. Construction of the new operations, i.e., the LIB plant, was accomplished through a cooperative agreement between BASF Catalysts LLC and the United States Department of Energy (US DOE) established to support the anticipated growth in the LIB industry and, more specifically, the electric drive vehicle and hybrid-electric vehicle industry. Construction of the LIB plant, which included a single kiln unit, was completed on June 11, 2012. In June 2013, construction of a second kiln unit began. The expected completion date for construction of the second kiln unit is December 2014, and the anticipated startup date of operation of the second kiln is January 2015.

The cathode materials manufacturing process consists of state-of-the-art operations, including: metal carbonate process operations, metal hydroxide process operations, mixed materials process operations, and cleanup operations. Collectively, the operations are equipped with 13 fabric filtration systems that were designed and are operated to achieve the highest degree of control affordable for particulate matter (PM) and hazardous air pollutants (HAPs) (nickel, manganese, and cobalt compounds). Although these filters operate to produce very low air

PUBLIC DOCUMENT

pollutant emissions, emission reductions achieved through use of the control devices installed as part of the LIB plant construction are not considered federally enforceable, and therefore, potential emissions must be based on uncontrolled emissions from the operations. The resulting potential HAP emission rate for the LIB plant is above the HAP major source threshold of 25 ton/year of any combination of HAPs. As such, the LIB plant is considered a new major source of HAP.

1.2 PROCEDURAL REQUIREMENTS FOR A CASE-BY-CASE MACT DETERMINATION

The OEPA requested that BASF conduct a case-by-case analysis to propose a MACT emission limit or standard because the LIB plant is a new major source of HAP and not specifically regulated or exempted from regulation under a standard issued pursuant to Sections 112(d), 112(h), or 112(j) of the CAAA that has been incorporated in another subpart of Part 63.

The requirements for a 112(g) case-by-case MACT analysis are described in 40 CFR § 63.43(e). Under that section, an application for a MACT determination must specify a control technology selected by the owner or operator that, if properly operated and maintained, will meet the MACT emission limit or standard as proposed by the applicant and approved by OEPA according to the principles set forth in 40 CFR § 63.43(d).

For a new source, MACT is defined as the emission limitation which is not less stringent than that achieved in practice by the best controlled similar source and which reflects the maximum degree of deduction in emissions that is achievable by the constructed or reconstructed major source. In accordance with § 63.43(d)(3), the MACT standard may be determined to be a specific design, equipment, work practice, or operational standard, or a combination thereof, if it is not feasible to prescribe or enforce an emission limitation.

Table 1 lists the information that is required to be submitted in a case-by-case MACT analysis, to the extent needed to support a proposed MACT emission limit or standard. Table 1 also shows the location that such information is provided in BASF documents.

In addition to the 112(g) case-by-case MACT requirements, §63.43(c)(4) specifies that BASF must comply with all applicable requirements of Subpart A of 40 CFR Part 63 with respect to operation of the LIB plant.

PUBLIC DOCUMENT

These requirements, which are known as the MACT general provisions, are found in §§ 63.1 through 63.16. As an example, BASF will prepare a startup, shutdown, and malfunction plan for the LIB plant in accordance with § 63.6(e)(3).

Table 1. Information Requirements to Support a Case-by-Case MACT Determination as Described in 40 CFR §63.43(e)

Application Requirement	Location of Requirement Content
(i) The name and address of the major source	PTI Applications
(ii) A brief description of the major source and identification of any listed source category or categories in which it is included	PTI Applications
(iii) The expected commencement date for the construction	PTI Applications and this MACT Analysis
(iv) The expected completion date for construction	PTI Applications and this MACT Analysis
(v) The anticipated date of start-up	PTI Applications and this MACT Analysis
(vi) The HAP(s) emitted by the source and the estimated emission rate for each such HAP	PTI Applications and this MACT Analysis
(vii) Any federally enforceable emission limitations applicable to the constructed major source	PTI Applications
(viii) The maximum and expected utilization of the source and the associated uncontrolled emission rates for that source	PTI Applications
(ix) The controlled emissions for the source in tons per year at expected and maximum utilization	PTI Applications and this MACT Analysis
(x) A recommended emission limitation for the constructed or reconstructed major source consistent with the principles set forth in §63.43(d)	This MACT Analysis
(xi) The selected control technology to meet the recommended MACT emission limitation	This MACT Analysis
(xii) Supporting documentation, including identification of alternative control technologies considered by the applicant to meet the emission limitation	This MACT Analysis
(xiii) Any other relevant information required pursuant to 40 CFR 63 Subpart A	This MACT Analysis

1.3 OVERVIEW OF BASF CASE-BY-CASE MACT ANALYSIS METHODOLOGY

Defining MACT is generally a two-step process: 1) identify a control technology that represents the highest control achieved in practice by the best-controlled similar source, and 2) determine whether stricter controls are achievable in light of costs, non-air quality health and environmental

PUBLIC DOCUMENT

impacts, and energy requirements. BASF's case-by-case MACT analysis is based on this process and entails first identifying the emission control which is achievable in theory at the LIB plant and achieved in practice by the best controlled similar source and then using the information to determine MACT (i.e., the maximum degree of reduction in emissions of HAP that is achieved in practice).

Section 2 of this report describes the LIB plant and the operations within the plant. This information is presented to assist the reader in understanding the MACT concept of "similar source" and to assist in determining technically feasible control technologies. Section 3 presents an evaluation of control technologies used in practice for similar sources, and Section 4 identifies sources similar to the LIB plant and the emission control technologies utilized by those similar sources. Section 5 presents the proposed MACT control technology and operational standards of the control technology in order to demonstrate continued compliance.

PUBLIC DOCUMENT

2 LITHIUM ION BATTERY CASE-BY-CASE MACT CONSIDERATIONS

2.1 LIB PLANT PROCESS OVERVIEW

The BASF LIB plant (cathode material manufacturing process) consists of 15 process operations identified as Cathode-1 through Cathode-15. These operations have the potential to emit PM, including inorganic solid phase metal HAPs. Raw materials consist of mixed metal powders, and the end product is a dry powder material that is packaged in drums or bags. The manufacturing process begins with receipt of raw materials (non-HAP metal carbonate and HAP metal hydroxide). The raw materials are milled, mixed, and then chemically combined in one of two kilns. The resulting chemical is a HAP compound (cobalt compound/manganese compound/nickel compound) that is again milled and blended before packaging. Once the raw materials are introduced, the entire manufacturing process takes place in a closed system.

Process equipment within the LIB plant were designed and constructed to achieve maximum recovery of valuable raw materials and products from all operations. The mills and blenders are specifically designed to minimized dust generation and maximize material recovery. Except for the two kilns, all process equipment are served by a dust filter (the LIB plant includes 13 such filters).

Table 2 lists the process operations, the identification numbers of the associated primary and secondary control devices, and the associated stacks. (Process descriptions in this table are considered trade secret information). A total of 7 stacks are used to discharge emissions from the 15 processes. As identified in Table 2, air streams from Cathode-1 through Cathode-7 are combined after control and prior to being discharged to the atmosphere through Stack A1, air streams from Cathode-9 and Cathode-13 are combined after control and prior to being discharged through Stack A2, and air streams from Cathode–11 and Cathode-12 are combined after control and prior to being discharged through Stack A9. All other stacks serve individual processes.

PUBLIC DOCUMENT

Table 2. Summary of Emission Points

Process Operation	Description[a]	Dust Collector	After Filter	Stack
Cathode-1	[redacted]	DF-1		A1
Cathode-5		DF-5	AF-2	
Cathode-3		DF-3	AF-1	
Cathode-2		DF-2	AF-3	
Cathode-4		DF-4		
Cathode-6		DF-6		
Cathode-7		DF-7		
Cathode-9		DF-12, DF-8	AF-4	A2
Cathode-13		DF-8		
		DF-11	AF-7	
Cathode-10		DF-9	AF-5	A3
Cathode-8				A4
Cathode-14				A6
Cathode-11		DF-10	AF-6	A9
Cathode-12				
Cathode-15		DF-13	AF-8	A10

a. The process descriptions are considered trade secret information.

Figure 1 presents a schematic of the process flow through the LIB plant. (The process descriptions in Figure 1 are considered trade secret information). Raw materials (the non-HAP material and the precursor material) enter the process on the left side of the schematic and are processed from left to right. The numerous low-flow dust filters, as well as the after filters, are shown connected to process operations identified in Table 2. As illustrated in Figure 1, the LIB plant consists of a large number of enclosed and intricately-connected processes.

PUBLIC DOCUMENT

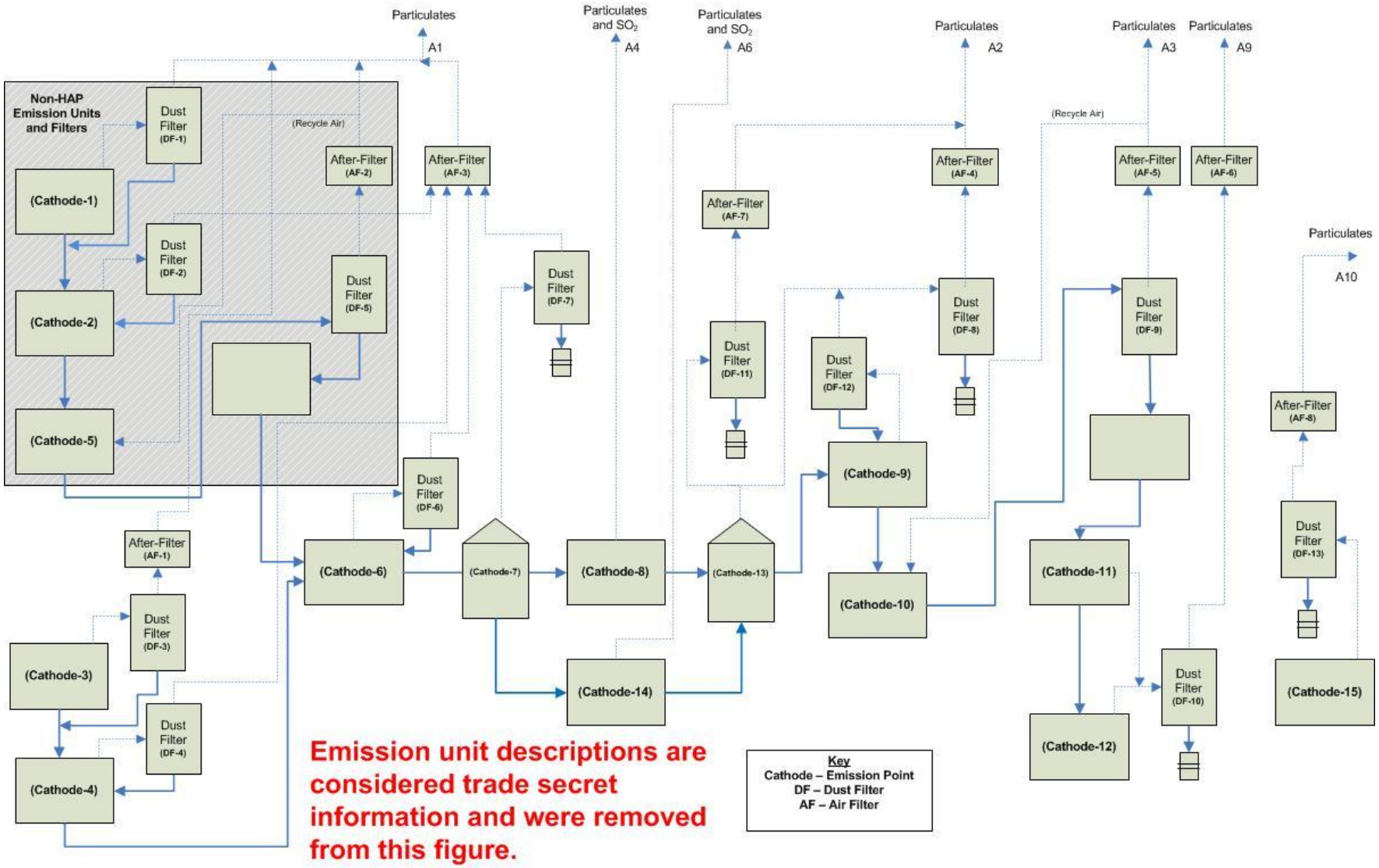

Figure 1. Process flow diagram for the BASF Lithium Ion Battery Plant.

PUBLIC DOCUMENT

2.2 *LIB PLANT AIR CAPTURE AND FLOW SCHEMES*

Process equipment are constructed as fully-enclosed units to completely eliminate fugitive loss of raw or process materials. Material transfer between equipment units takes place through enclosed pipe or conveyors. Table 3 describes the properties of the capture systems that have been incorporated into the LIB plant operations. A large portion of the LIB plant is occupied by the sagger conveyor system that receives raw material for delivery to the two kilns and transports processed material to the unloading station after the kilns. The sagger conveyor system is located within a three-story housing that operates under negative pressure and functions as a permanent total enclosure (PTE) to capture all escaping air for delivery to various fabric filtration systems. The two kilns are isolated from the PTE by kiln entry and exit point airlocks that prevent the air in the housing from entering the either kiln.

The two mills are the largest individual processes from an air volume standpoint. These mills (Cathode-5 and Cathode-10) incorporate state-of-the-art high-efficiency cyclones/collection vessels as intermediate product capture devices to separate most of the material from the air stream prior to passing through the filters. A majority of the air stream exiting the mill filters is recycled back to the mills to maintain sufficient flow of dry air through the mills to avoid moisture uptake by the process material. The only air added to the recycle loop is fresh dry air used to flush seal gaps around rotating parts of the mill and a small amount as entrained air with the process material. The balance of added air and recycle air results in less than 10 percent of the air stream exiting the mill filters that must be vented to the atmosphere to maintain the required recycle air flow rate.

Minimum air flows are maintained from all other process equipment to all filters (air flow rates through individual filters range from 30 cubic feet per minute [cfm] to 2,350 cfm), so as to minimize dust entrainment in the airstream and minimize the air-to-cloth ratios (as shown in Table 3), ultimately maximizing the degree of control. All of the separated material is either returned directly to the process from which it originated or collected in a plastic-lined drum for reuse in subsequent processing. To further prevent potential material loss, all process equipment equipped with a dust filter, except the non-HAP metal carbonate unloading operation, are exhausted through a subsequent in-line after filter prior to being discharged to the atmosphere. These after filters, some of which are high efficiency particle air (HEPA) filters, were added to the HAP-containing processes to provide a continuous secondary layer of control should a malfunction of a primary control/recovery device occur.

PUBLIC DOCUMENT

Table 3. PM Capture and Filter Design Parameters for HAP-containing Process Equipment

Process Operation	Equipment Description	Equipment Discharge/Transfer Mechanism	Source of Exhaust Air	Filter Design Air-to-Cloth ratio
Cathode-1	Not in HAP service			
Cathode-5	Not in HAP service			
Cathode-3	Standard fully-enclosed Supersack handling bin (off-the-shelf)	Attached via hard pipe to Cathode-4	Induced draft acting as an inductor to assist in material transfer	4.0
Cathode-2	Not in HAP service			
Cathode-4	Standard fully enclosed hopper with rotary discharge valve (off-the-shelf)	Hard pipe/short screw conveyor to Cathode-6	Displaced air during Cathode-3 operation	1.8
Cathode-6	Standard fully-enclosed mixer (off-the-shelf)	Hard pipe to Cathode-7 feed hopper/short screw conveyor	Small induced draft to clear mixer	1.8
Cathode-7	Three-story PTE for containing sagger conveyor (loading, unloading, cleaning) and kiln airlock (field constructed)	Dropped via hard pipe to Cathode-9	Induced draft to maintain negative pressure in housing; multiple pick-up points	1.9
Cathode-9	Standard fully-enclosed crusher (off-the-shelf)	Hard pipe to enclosed feed bin equipped with short screw conveyor; rotary valve discharge to Cathode-10.	Displaced air when transferring material to Cathode-10	1.9
Cathode-13	Three-story PTE for containing sagger conveyor (loading, unloading, cleaning) and kiln airlock (field constructed)	Dropped via hard pipe to Cathode-9	Induced draft to maintain negative pressure in housing; multiple pick-up points	1.9
Cathode-10	Standard, fully-enclosed mill (off-the-shelf)	Air conveyed to product collector for transfer via hard pipe to Cathode-11	Intermediate product conveying air	3.6
Cathode-8	Fully-enclosed indirect-heated dryer with airlock (field constructed)	Inlet and outlet airlocks to accommodate sagger conveyor	Airlock exhaust and small induced draft to maintain negative pressure in kiln	none
Cathode-14	Fully-enclosed indirect-heated dryer with airlock (field constructed)	Inlet and outlet airlocks to accommodate sagger conveyor	Airlock exhaust and small induced draft to maintain negative pressure in kiln	none
Cathode-11	Standard fully enclosed hopper with screw discharge (off-the-shelf)	Hard pipe to Cathode-12	None	1.8
Cathode-12	Fully-enclosed packaging station (off-the-shelf)	Material is completely packaged prior to transfer	Small induced draft to clear enclosure	1.8
Cathode-15	Central Vacuum Unit (off-the-shelf)	Dust is collected in receiver bin	Vacuum unit	2.2

PUBLIC DOCUMENT

2.3 *LIB PLANT EMISSION CALCULATIONS*

Table 4 presents a summary of uncontrolled and controlled potential PM and HAP emissions for each LIB plant processes as well as each stack after air streams are combined. (Process descriptions in this table are considered trade secret information). These emission rates were originally presented in the LIB plant PTI applications cited in Section 1 of this report. Potential uncontrolled emissions are based on uncontrolled AP-42 emission factors for metallic mineral processing, while annual controlled mass emissions (ton/yr) are calculated after applying an assumed control efficiency of 99%, taking into account only the control achieved by the primary dust filters (pulse-jet fabric filters).[i]

As noted above, the calculated values presented in Table 4 are to allow comparison to the values originally presented in the LIB plant PTI. These values are for illustration only, and caution is warranted when attempting to extrapolate the calculated results for other uses. The primary reason for this caution is that the calculated values present an indication of the outlet conditions from the controlled processes, but the values themselves are not completely accurate. The algebraic relationship between hourly mass inlet and outlet loadings inherently produce higher calculated control efficiencies with higher inlet mass rates. Additionally, consistency of results between this calculated efficiency and a calculated outlet concentration cannot be maintained between identical fabric filtration systems. This is because for a given combination of filter design and dust loading, the overall efficiency of a fabric filter is more likely to vary with inlet particulate mass loading (i.e., pounds per hour) whereas the outlet particle concentration (i.e., grains per cubic foot) from a fabric filter is nearly constant.[ii]

The algebraic anomaly around control efficiency calculations can be demonstrated by comparing the controlled emission rates for Cathode-5 and Cathode-10 in Table 4. The fabric filters associated with these two processes (DF-5 and DF-9, respectively) are identical in all ways (i.e., manufacturer, design, fabric filter bag model), and the inlet concentrations

---

[i] Compilation of Air Pollutant Emission Factors, AP-42, Fifth Edition (8/82). Volume I, Section 11.24: Metallic Minerals Processing

[ii] *Stationary Source Control Techniques Document for Fine Particulate Matter*, Air Quality Strategies and Standards Division, U.S. EPA, October 1998. http://www.epa.gov/ttncatc1/dir1/finepmtech.pdf

PUBLIC DOCUMENT

are nearly the same. Because DF-5 and DF-9 are based on the exact same design criteria (air-to-cloth ratio), the outlet PM concentrations for the units should be the same. However, using the controlled PM emission rates (based on 99% control) and air flow rates provided in Table 4 for DF-5 and DF-9 results in a calculated PM concentration of 0.0043 gr/dscf for DF-5 and 0.0054 gr/dscf for DF-9. As per the USEPA document cited above, the outlet concentration of DF-9 should be the same as that for DF-5 (because the filter designs are the same), and the control efficiency of DF-9 should be higher than that of DF-5 (because the inlet mass loading is twice as high in DF-9 as in DF-5).

Controlled concentrations (grains per dry standard cubic foot [gr/dscf] of gas) are calculated based on the annual controlled mass emissions and the outlet gas flow rates reported in Table 4. Due to the conservative nature of the emission factors and assumed control efficiency, both the uncontrolled and controlled emissions are higher than would actually be expected. This is especially true for the mills that employ specially-designed high-efficiency cyclones/collection vessels for material separation prior to the dust collector (PM separation in these high-efficiency cyclones is likely not accounted for in the AP-42 emission factor that was established in 1982.) In addition, no additional control has been applied to account for performance of the after filters.

As seen in Table 4, the total uncontrolled HAP emission rate is 46.6 ton/year. The individual HAP component of the uncontrolled emission rate varies depending on the product formulation. The largest individual HAP metal component in the precursor material for any product is nickel, and the largest fraction of nickel in any product is 50 percent. The precursor material is added to the lithium carbonate at a ratio of approximately 7 to 3 (i.e., 70 % precursor). The calcination process that occurs within the kilns chemically combines the raw materials into a single compound. Although the new compound is less than 100 percent element HAP, the Clean Air Act of 1990 defines the metal-bearing HAP as the HAP compound. Thus, the entire quantity of material leaving the kiln is considered the HAP compound (i.e., a compound of nickel, cobalt, and manganese). Therefore, the largest single HAP uncontrolled emission rate is 46.3 ton/year of nickel compound, assuming continuous manufacturing of the product containing the largest ratio of nickel. This emission rate was calculated assuming the material HAP fraction in emissions from Cathode-3 and Cathode-4 are 50 percent nickel, emissions from Cathode-6 and Cathode-7 are 35 percent nickel, and emissions from the kilns and all subsequent process operations (i.e., Cathodes-8 through 14) are 100 percent nickel compounds.

PUBLIC DOCUMENT

Table 4. Summary of LIB Plant Potential Uncontrolled and Controlled Emissions

Process Operation	Description[a]	Potential Uncontrolled Emissions ton/yr		Dust Collector ID	Controlled Emissions[b] ton/yr		Outlet Gas Flow Rate (acfm)	Stack ID	Controlled Emissions at Outlet of Stack[b] ton/yr		Controlled Emissions at Outlet of Stack[b] gr/dscf[c]	
		PM	HAP[d]		PM	HAP			PM	HAP	PM	HAP
Cathode-1	[redacted]	0.10	0	DF-1	0.0010	0	300	A1	0.24[f]	0.0071	0.0019	0.0001
Cathode-5	[redacted]	22.9	0	DF-5	0.23	0	1,423[e]					
Cathode-3	[redacted]	0.17	0.17[g]	DF-3	0.0017	0.0017	300					
Cathode-2	[redacted]	0.32	0	DF-2	0.0032	0	1,300[i]					
Cathode-4	[redacted]	0.17	0.17[g]	DF-4	0.0017	0.0017						
Cathode-6	[redacted]	0.26	0.18[h]	DF-6	0.0026	0.0018						
Cathode-7	[redacted]	0.26	0.18[h]	DF-7	0.0026	0.0018						
Cathode-9	[redacted]	0.62	0.62	DF-12 /DF-8	0.0062	0.0062	1,300	A2	0.0080	0.0080	0.0001	0.0001
Cathode-13	[redacted]	0.19	0.19	DF-8	0.0018	0.0018						
				DF-11			116					
Cathode-10	[redacted]	44.5	44.5	DF-9	0.44	0.44	2,213[e]	A3	0.44[f]	0.44	0.0054	0.0054
Cathode-8	[redacted]	0.13	0.13[j]	none	0.13	0.13	3,500	A4	0.13	0.13	0.0010	0.0010
Cathode-14	[redacted]	0.13	0.13[j]	none	0.13	0.13	3,500	A6	0.13	0.13	0.0010	0.0010
Cathode-11	[redacted]	0.19	0.19	DF-10	0.0037	0.0037	2,350	A9	0.0037	0.0037	0.0042	0.0042
Cathode-12	[redacted]	0.19	0.19									
Cathode-15	[redacted]	0.002	0.002	DF-13	0.0015	0.0015	208	A10	0.0015	0.0015	0.0049	0.0049
	TOTAL	**70.2**	**46.6**		**0.96**	**0.73**			**0.96**	**0.73**		

Footnotes for Table 4 are defined on the following page.

PUBLIC DOCUMENT

Footnotes for Table 4:

a. The process descriptions are considered trade secret information.
b. Controlled emissions account for dust filter control efficiency (99% was assumed), but do not account for additional reductions achieved in the after filters.
c. The outlet grain loadings identified for each process operation do not represent the design loading for the associated control device; the outlet grain loadings were calculated based on the controlled emission rate, which was conservatively assumed to be 99% control, and the maximum air flow rate (see Subsection 2.3 for more detail.)
d. Total HAP emissions include nickel/manganese/cobalt compounds.
e. The majority of the air flow must be returned to the process (see Subsection 2.2 for more detail).
f. Assuming 90% of the air flow is recycled to the mills, the controlled PM emission rate for stack A1 is 0.036 ton/yr and for stack A3 is 0.044 ton/yr.
g. The precursor material loaded to the system in Cathode-3 is 100% total HAP with a maximum individual HAP content of 50% (nickel – see Subsection 2.3 on pg. 11 for more detail).
h. The material processed in Cathode-6 and -7 has a maximum precursor content of 70% which results in a total HAP content of 70% and maximum individual HAP content of 35% (nickel – see Subsection 2.3 on pg. 11 for more detail).
i. The air flow rate through the fabric filters associated with Cathodes-2, -4, -6, and -7 are regulated by individual pressure control loops that control the blower output to maintain the pressure set-point. The pressure set-points for Cathodes-2, -4, and -6 maintain maximum air flow rates of 30 acfm with the balance air flow through Cathode-7.
j. The calcination process that occurs in the kilns chemically combines the raw materials into a single compound; as such, the material exiting the kiln is considered a single metal HAP compound based on the definition of metal-bearing HAP in the Clean Air Act of 1990 (see Subsection 2.3 on pg. 11 for more detail).

PUBLIC DOCUMENT

In accordance with 40 CFR 63.43(d)(1) and (2) (reproduced in Appendix A), MACT requirements recommended by an applicant must not be less stringent than the emission control which is achieved in practice by the best controlled similar source. A case-by-case MACT analysis must define a control strategy, based upon available information, that can achieve the maximum degree of reduction in emissions of HAP. In the hierarchy of air pollution control strategies, therefore, a MACT control strategy would represent the ultimate degree of control achievable. An applicant must also determine whether stricter controls are achievable. This determination can be facilitated by reviewing emission control concepts established for similar sources by other regulatory programs such as New Source Review and New Source Performance Standards.

The following sections describe the various information sources investigated, as recommended by OEPA, to ensure that all possible control strategies were identified that could feasibly be applied to the LIB plant operations to achieve the maximum degree of emissions reduction. When reviewing information in this section, as well as Section 4 that follows, the reader should be cognizant of the original intention of U.S. Environmental Protection Agency (USEPA) with respect to data collection for a case-by-case MACT evaluation. While every effort was made to collect complete and relevant information, the use of the information is guided by USEPA's intention, as stated in the preamble to the final case-by-case MACT rule:

> The EPA wishes to clarify that the requirement in §63.43(e)(2)(vi) to list emission rates is intended as background information to enable the permitting authority to identify the pollutants requiring MACT controls. The EPA recognizes that there is often a significant effort required to obtain precise estimates of HAP emission rates and speciations. The EPA does not intend in this paragraph to require a greater level of detail than is necessary for evaluating applicability and emission control issues. (61 FR 68393, December 27, 1996)

PUBLIC DOCUMENT

3.1 *SUMMARY OF AVAILABLE CONTROL TECHNOLOGIES*

The USEPA Clean Air Technology Center (CATC) website maintains Technical Bulletins and Air Pollution Technology Fact Sheets for a variety of control technologies. A review of the Technical Bulletins and Fact Sheets identified several technologies capable of controlling PM, PM with an aerodynamic diameter less than 10 microns (µm) (PM10), PM with an aerodynamic diameter less than 2.5 microns (PM2.5), and particle-phase HAP (PM-HAP) emissions.

Table 5 presents a summary of CATC-identified PM control technologies and the expected control efficiencies. Table 5 shows that a new baghouse/fabric filter will commonly operate with a control efficiency of 99% and greater. The same is shown for a new electrostatic precipitator (ESP). Table 5 also shows that a wet scrubber or cyclone will operate with a maximum control efficiency equal to the low range of control achieved by a fabric filter or ESP. Thus, one can conclude that further consideration of technology for this case-by-case MACT can be limited to either a fabric filter or ESP. (As concluded in Section 4, however, similar sources employ fabric filtration.) The following subsections provide additional discussion of fabric filters and, to a lesser extent, ESPs. A brief description of a cyclone is also included because the mills incorporate a high-efficiency cyclone as an integral part of the process. Finally, a description of extended media is included to describe the HEPA after filters.

Table 5. Summary of PM and PM-HAP Control Technologies and Control Efficiencies

Control Category	Control Type	Pollutant Removal Efficiency (%)		
		PM	PM10	PM2.5
Baghouse/Fabric Filter	Mechanical Shaker	Older existing equipment: 95 to 99.9 New equipment: 99 to 99.9		
	Pulse-Jet			
	Reverse-Air/Reverse-Jet			
Dry Electrostatic Precipitator (ESP)	Wire-Pipe	Older existing equipment: 90 to 99.9 New equipment: 99 to 99.9		
	Wire-Plate			
Wet ESP	Wire-Pipe	Older existing equipment: 90 to 99.9 New equipment: 99 to 99.9		
	Wire-Plate			
Wet Scrubber	Condensation			99+
	Impingement-Plate/Tray-Tower	50 to 99		
	Mechanically-Aided	80 to 99		
	Orifice	80 to 99		
	Packed-Bed/ Packed-Tower		50 to 95	
	Spray-Chamber/Spray-Tower	70 to 99		
	Venturi	70 to 99		
Cyclone	Conventional	70 to 90	30 to 90	0 to 40
	High Efficiency	80 to 99	60 to 95	20 to 70
	High Throughput	80 to 99	10 to 40	0 to 10

PUBLIC DOCUMENT

3.1.1 *Baghouse/Fabric Filter*[iii]

A fabric filter unit consists of one or more isolated compartments containing rows of fabric bags or cartridges. PM-laden gas passes through the fabric where the particles are retained on the upstream face of the bags, and the cleaned gas stream is vented to the atmosphere. The filter operates by cycling between long periods of filtering and short periods of cleaning. During cleaning (either mechanical or with air), dust that has accumulated on the bags is removed from the fabric surface and deposited in a hopper. (In the LIB plant, this dust is recovered for reintroduction back into the process.)

Fabric filters collect PM with sizes ranging from submicron to several hundred microns in diameter at efficiencies generally in excess of 99 or 99.9 percent. The layer of dust, or dust cake, collected on the fabric is primarily responsible for such high efficiency, as it serves as a barrier that traps PM as they travel through the cake. Fabric filters are used where high-efficiency PM collection is required.

The major operating feature of fabric filters that distinguishes them from other gas filters, such as HEPA filters, is the ability to renew the filtering surface periodically by cleaning. Fabric filters are usually made of woven or (more commonly) needle-punched felts sewn to the desired shape, mounted in a plenum with special hardware, and used across a wide range of dust concentrations.

Pulse-jet cleaning of fabric filters can treat high dust loadings, operate at constant pressure drop, and occupy less space than other types of fabric filters. Because bags cleaned by pulse-jet do not need to be isolated for cleaning, pulse-jet cleaning fabric filters do not need extra compartments to maintain adequate filtration during cleaning. Also, because of the intense and frequent nature of the cleaning, they can treat higher gas flow rates with higher dust loadings. Consequently, fabric filters cleaned by pulse jet can be smaller than other types of fabric filters in the treatment of the same amount of gas and dust, making higher gas-to-cloth ratios achievable.[iv]

[iii] *EPA Air Pollution Control Cost Manual, Sixth Edition*, EPA/452/B-02-001, January 2002, http://www.epa.gov/ttncatc1/dir1/c_allchs.pdf

[iv] *Stationary Source Control Techniques Document for Fine Particulate Matter*, Air Quality Strategies and Standards Division, U.S. EPA, October 1998. http://www.epa.gov/ttncatc1/dir1/finepmtech.pdf

PUBLIC DOCUMENT

Important process variables include particle characteristics, gas characteristics, and fabric properties. The most important design parameter is the air- or gas-to-cloth ratio and the usual operating parameter of interest is pressure drop across the filter system[v]. The gas-to-cloth ratio has a major effect on particle collection mechanisms. This is a ratio of the volumetric flow rate of gas per unit of filtering area, and is usually expressed in the units of cubic feet per minute of gas per square foot of fabric [(ft^3/min)/ft^2]. Higher gas-to-cloth ratios allow for smaller fabric filters, but as the gas-to-cloth ratio increases, there is increased pressure drop, increased particle penetration, blinding of fabric, more frequent cleaning, and reduced bag life. Table 6 presents recommended gas-to-cloth design conditions for various industrial dusts.

Table 6. Gas-to-Cloth Design Ratios for Pulse-jet Fabric Filters

Dust	Gas-to-Cloth Ratio for Pulse-jet Felt Fabric ($acfm/ft^2$ of net cloth area)
carbon black, graphite, fly ash, iron sulfate, lead oxide, soap, detergents, talc	5 to 6
alumina, bauxite, coal, cement, fertilizer, iron oxide, limestone, paint pigments, plastics, silica, starch	7 to 8
asbestos, clay, cosmetics, enamel frit, feldspar, gypsum, iron ore, lime, mica, paper, quartz, rock dust, sand, spices	9 to 11
cocoa, chocolate, feeds, grain, flour, leather dust, sawdust, slate, sugar	12 to 14

Source: Table 1.1, EPA Air Pollution Control Cost Manual, Sixth Edition, January 2002

3.1.2 *Electrostatic Precipitator*

An ESP is a PM control device that uses electrical forces to move the PM out of the flowing gas stream and onto collector plates. The PM is given an electrical charge by forcing them to pass through a corona, a region in which gaseous ions flow. The electrical field that forces the charged PM to move comes from electrodes maintained at high voltage in the center of the flow lane. Resistivity of the PM is a key factor influencing the successful use of an ESP, because the PM collected on the ESP plates or wires must be removed without re-entraining it into the gas stream. PM can become reentrained when the electrical charge is retained by the particle such as occurs when handling high-resistivity materials. This

[v] *EPA Air Pollution Control Cost Manual, Sixth Edition*, EPA/452/B-02-001, January 2002, http://www.epa.gov/ttncatc1/dir1/c_allchs.pdf

PUBLIC DOCUMENT

difficulty can be lessened by conditioning the gas stream with water and through the use of a wet ESP, but these mitigations make the collected PM less amenable to re-introduction into the production process than particles collected from a dry control system.

3.1.3 Cyclone

Cyclones operate to separate PM from a gaseous stream through the use of centrifugal forces. Particle-laden gas is made to rotate in a decreasing diameter pathway forcing solids to the outer edge of the gas stream for deposition into the bottom of the cyclone. Because different-sized particles display differing inertial properties, cyclones can also be used to classify materials by particle size. Higher efficiency cyclones are designed to achieve high control of smaller particles, but come with higher pressure drops, which require higher energy costs to move the exhaust gas through the cyclone.

3.1.4 Extended Media

In addition to the PM control devices discussed above, extended media filters, such as HEPA and ultra-low penetration air (ULPA) filters, are utilized in situations where high collection efficiency of submicron PM is required, where toxic or hazardous PM cannot be cleaned from the filter, or where the PM is difficult to clean from the filter. HEPA and ULPA filters are installed as the final component in a PM collection system, downstream from other PM collection devices such as ESPs or baghouses.

HEPA filters are composed of a mat of randomly arranged fibers. The fibers are typically composed of fiberglass and possess diameters between 0.5 and 2.0 μm. The small fiber diameter and high packing density of the filter media allow for the efficient collection of submicron PM. HEPA and ULPA filters are generally not cleaned, because a dynamic cleaning system would likely prohibit the filter from maintaining its rated efficiency. The dust cake that forms on the filter media from the collected PM will increase its collection efficiency. After sufficient dust cake forms on the filter, however, the air flow rate will decrease to the point that prevents adequate air flow, and the filter must be replaced and properly disposed.

PUBLIC DOCUMENT

HEPA filters, as defined by the DOE standard adopted by most American industries, remove at least 99.97% of airborne particles 0.3 µm in diameter.[vi]

3.2 *DATA AVAILABLE FROM THE USEPA CONTROL TECHNOLOGY CENTER*

The USEPA's Air Pollution Control Technology Center (APCTC) conducts third party verification of commercial-ready technologies that control stationary and mobile air pollution sources and mitigate the effects of indoor air pollutants. The APCTC has verified technologies in a range of categories, including:

- Baghouse filtration products
- Dust suppression and soil stabilization products
- Emulsified fuels
- Indoor air quality products
- Mobile sources devices
- Mobile sources fuels
- Mobile sources selective catalytic reduction
- Nitrogen oxide (NOx) control technologies for stationary sources
- Outdoor wood-fired hydronic heaters
- Paint overspray arrestors
- Volatile organic compounds (VOCs) emission control technologies

The baghouse filtration products category is the only technology category tested that is relevant to the type of emissions (particle-phase) generated by the LIB plant operations. This program area was designed to evaluate the performance of particulate filters for fine-particle emission control. Performance testing of filtration performance was conducted by the APCTC during four separate rounds of testing: initial verifications conducted in 2000, a second round of verifications conducted in 2001, a third round in 2005 through 2007, and a final round in 2011 through 2012.

During each performance test, a small swatch of the fabric filter was tested in a test apparatus (i.e., not an actual baghouse in operation at an industrial facility). While the performance testing conducted on the fabric filter swatches do not directly translate to the efficiency of a particular

[vi] http://www.iaqsource.com/article.php/what-is-a-hepa-filter-and-what-is-not-a-hepa-filter/?id=20

PUBLIC DOCUMENT

baghouse in practice, the results demonstrate continuous improvement in the performance of the verified fabrics over the past decade.[vii] As such, fabric filters equipped with newer filter media will have a greater control efficiency than fabric filters equipped with older filter models.

The dust collectors at the LIB plant employ the latest in fabric filtration technology. As an example, the dust filters used for the mills (i.e., the largest contributors to the uncontrolled emission estimate at the LIB plant) are equipped with latest generation of filter media manufactured by the Donaldson Company, Inc. (Donaldson), Tetratex Extreme PTFE-Membrane (ePTFE). Donaldson actively participated in each round of the baghouse filtration products verification studies by the APCTC. In fact, three of the nine filter samples tested during the final round of verification studies were samples of Donaldson's Tetratex ePTFE filter technology. Each of these three filter samples resulted in measured concentrations below the detection limit of the study.

[vii] The Evolution of Improved Baghouse Filter Media as Observed in the Environmental Technology Verification Program, Paper #176, presented at the Air & Waste Management Association 101st Annual Conference. June 2008. http://www.epa.gov/etv/pubs/600etv08023.pdf

PUBLIC DOCUMENT

4 EVALUATION OF SIMILAR SOURCES

In accordance with the principles of MACT determinations specified in 40 CFR 63.43(d), the MACT requirements shall not be less stringent than the emission control which is achieved in practice by the best controlled similar source. Similar source, as defined in §63.43, means a stationary source or process that has comparable emissions and is structurally similar in design and capacity to a constructed or reconstructed major source such that the source could be controlled using the same control technology.

The preamble to the 112(g) case-by-case MACT rule provides two criteria that should be used when determining if a source is considered similar: 1) whether the two sources have similar emissions, and 2) whether the source can be controlled with the same type of control technology. The preamble goes on to classify emission sources as one of five different types: 1) process vent or stack discharges, 2) equipment leaks, 3) evaporation and breathing losses, 4) transfer losses, and 5) operational losses. These five types of emission sources can serve as a general guide in identifying available control options while also considering the concentration and the type of constituents of a gas stream. USEPA also states that while two pieces of apparatus can be classified within the same emission source type, this does not automatically mean that the emission points can be controlled using the same type of control technology. In fact, the preamble explicitly states that "the EPA recognizes that control efficiencies across similar sources may be different. The permitting authority is expected to use its judgment in determining when operating conditions are comparable across emission units."[viii]

The following subsections summarize the evaluation of available information on emission controls that are achieved in practice by similar sources. Per USEPA guidance, this evaluation considered the following factors: the volume and concentration of emissions, the type of emissions, the similarity of emission points, and the effectiveness of controls relative to the effectiveness of those controls at the LIB plant, as well as other operating conditions.[v]

[viii] Federal Register, Volume 61, No. 250. Hazardous Air Pollutants: Regulations Governing Constructed or Reconstructed Major Sources, Final Rule. pgs. 68394 and 68395. December 27, 1996.

PUBLIC DOCUMENT

4.1 *SIMILAR SOURCES WITHIN THE LIB INDUSTRY*

Of the similar source evaluation factors identified by USEPA and listed above, BASF considers the type of emissions and the similarity of emission points as the most relevant factors. As noted earlier in this report, the US DOE is supporting growth in the LIB industry and tracks current process development. Because this development represents the activity of the most relevant similar sources to the LIB plant, a nationwide search was conducted to identify facilities with manufacturing operations similar to the LIB plant. Such facilities would potentially be considered in the same MACT source category as the LIB plant if one was listed by USEPA. Using the US DOE activity as a starting point, two general types of potentially similar facilities were identified: battery material manufacturers and battery assemblers. Appendix B presents a summary of the facilities identified in this search. The types of operations present at these facilities (i.e., raw material handling and processing/conditioning) were determined to represent the most valid comparison to the LIB plant operations. Table 7 lists the permitted battery material manufacturers and battery assembly facilities identified in the search and summarizes the types of operations present at each facility as well as the permitted control requirements, if available.

In all cases except one, the similar sources listed in Table 7 achieve PM control through the use of a fabric filter or HEPA filter or combination of both. Table 7 shows that sources within the LIB industry using a fabric filtration system achieve the highest degree of control.

PUBLIC DOCUMENT

Table 7. Similar Sources at Permitted Battery Material Manufacturers and Battery Assembly Facilities

Company	HAP Major or Minor Source?	Activity	Operations	Control Device	Emission Limit[a] (gr/dscf)
A123 Systems - Romulus, MI	minor	manufacture nano-iron phosphate cathode powder	receiving, handling, milling, mixing, and weighing	fabric filter	0.01
DOW-Kokam – Midland Battery Park, MI	minor	manganese oxide cathode / graphite LIB assembly	dry ingredient material handling and mixing	dust collectors and HEPA filters	0.001
EnerDel – Indianapolis, IN	synthetic minor	LIB assembly	mixers	fabric filter	0.03
EnerG2, Inc. – Albany, OR	minor	manufacture high energy density nano-carbon	milling	fabric filter	See footnote below. [b]
			product bagging	HEPA filter	
ERACHEM Comilog, Inc. – Riviera Beach, MD	minor	manufacture manganese carbonates	milling, classifier, material handling and transfer, and roaster/calciner,	fabric filter	0.03
LG Chem Michigan Incorporated – Holland, MI	minor	manganese-based cathode material LIB assembly	material metering and mixing	fabric filter	0.001 to 0.003
BASF Corporation – Troy, MI	minor	manufacture nickel metal hydride battery material	bulk bag unloading, mixing	fabric filter and HEPA filter	0.005
Rockwood Lithium – Kings Mountain, NC	synthetic minor	manufacture Li2CO3 and LiOH	material handling	fabric filter	not applicable (subject only to state PM emission limits based on process weight rate)
Toda America – Battle Creek, MI	minor	manufacture NMC cathode material	raw material handling and mixing, intermediate handling and mixing, and calcination mixing	fabric filter	0.001 to 0.03
			calcination process	wet scrubber	0.001

a. The Michigan PM emission limits are provided in units of lb PM/1,000 lb exhaust. Emission limits were converted to units of gr/dscf using the conversion provided by the Michigan Department of Environmental Quality.

b. The activated carbon process is subject to an overall annual emission limit of 2.6 ton PM/yr. PM emissions from any air contaminant source (other than fuel burning and fugitive emission sources) may not exceed 0.1 gr/scf.

PUBLIC DOCUMENT

4.2 *SUMMARY OF CONTROL TECHNOLOGY DETERMINATIONS DOCUMENTED IN USEPA'S RACT/BACT/LAER CLEARINGHOUSE FOR SIMILAR SOURCES*

The case-by-case MACT definition of similar source encompasses sources that may exist in other source categories, and, therefore, this evaluation of similar sources must look beyond the LIB industry itself. The USEPA CATC was consulted to aide in this endeavor.

The USEPA maintains a database of control technology determinations made throughout the United States. This database represents the largest compendium available in the field of air pollutant source requirements and control capabilities, and is a useful resource when conducting a nationwide case-by-case MACT analysis. As part of this nationwide control technology search, therefore, the RACT/BACT/LAER Clearinghouse (RBLC) database was queried for all PM determinations from January 1, 2008 to present (longer than a 5-year period). The query returns information for any process that has a PM determination. Each process could include several records for other pollutants as well; therefore, the number of records returned in any query may not all be related to PM. A total of 5,918 records were obtained from the query, downloaded into an Access database, and filtered to list only PM records (approximately 48% of the total records) and exclude records for operations that are not similar to the LIB plant.

Two separate screening methods were employed to evaluate the RBLC records for operations that are similar to the LIB plant. For both of these methods, all records for fuel combustion sources, such as coal, oil, or natural gas-fired boilers, were excluded from further consideration. There are no fuel combustion sources associated with the LIB plant; therefore, these records were removed because they failed the "similar design" criteria. Fuel combustion sources would produce larger volumes of air (i.e., combustion gases) than produced in the LIB plant, and the particulate will be much smaller than found in the LIB plant operations. This initial filtering removed approximately two thirds of the records. The remaining 1,050 PM records were evaluated using both of the following two methods:

1. Filter the PM records by industrial source category (i.e., SIC code) and use engineering judgment and general knowledge of the processes to exclude those not similar to the LIB plant. These records were removed because they failed the "similar design" and/or "similar capacity" criteria. Records excluded using this

PUBLIC DOCUMENT

method were related to sources such as large material processing and handling sources (e.g., cement and lime kilns), because they are much larger, both in gas volumes and particulate mass loadings, than the types of sources at the LIB plant.

2. Identify the records that report throughput capacity data and exclude all records that have reported hourly or annual throughputs more than 10 times greater than the hourly or annual LIB plant throughput rates. These records were removed because they failed the "similar capacity" criteria.

Appendix C provides additional documentation on the RBLC records review and the two separate methods employed to screen the records that are not similar. The review identified 58 records (sources) that are potentially similar to the LIB plant. The review was unable to fully assess whether these 58 records would be considered similar sources to the BASF LIB plant operations because the RBLC does not contain all of the information needed to assess the previously-stated USEPA evaluation factors (i.e., the volume and concentration of emissions, the type of emissions, the similarity of emission points, and the effectiveness of controls). Nonetheless, the records were evaluated in this assessment because they primarily include material handling processes and other operations with capacities that would be expected to be similar to the LIB plant capacities. Records were obtained from the following Standard Industrial Classification (SIC) groups:

- 2816 - Inorganic Pigments
- 2819 - Industrial Inorganic Chemicals, Not Elsewhere Classified
- 2895 - Carbon Black
- 2899 - Chemicals and Chemical Preparations, Not Elsewhere Classified
- 3211 – Flat Glass
- 3274 - Lime
- 3295 - Minerals and Earths, Ground or Otherwise Treated
- 3312 - Steel Works, Blast Furnaces (Including Coke Ovens), and Rolling Mills
- 3321 - Gray and Ductile Iron Foundries
- 3325 - Steel Foundries, Not Elsewhere Classified
- 3624 - Carbon and Graphite Products

Table 8 presents a summary of these 58 RBLC control technology determinations. Every similar RBLC record that identifies a control technology specifies a baghouse (fabric filter) as the control device

PUBLIC DOCUMENT

employed by the source. This leads one to conclude that the best controlled similar source employs a fabric filter. Therefore, evaluation of these similar sources yields the same conclusion as derived by review of the LIB industry sources, i.e., the best controlled similar source employs a fabric filter.

Table 8. Summary of Control Technology Determinations Found in RBLC for Similar Sources

Control Type	Total Number of Records	Type of Limit				
		gr/dscf		lb/hr	lb/ton	ton/yr
		0.005	0.01			
No additional control	1			1		
Operating practice	2			2		
Baghouse	55	29	6	13	7	3
TOTAL	**58**	**29**	**6**	**13**	**7**	**3**

4.3 REGULATIONS FOR SIMILAR SOURCES

USEPA has promulgated a variety of control technology standards in recent years for area sources (facilities emitting less than 10 tons per year of any one HAP and less than 25 tons per year total HAP) and major sources (facilities emitting 10 tons per year or more of any one HAP and 25 tons per year or more total HAP). The LIB plant is a major source of HAP based on the uncontrolled emissions of PM-HAP metals; however, the LIB plant does not meet the applicability requirements for any source category that has currently been selected by USEPA for regulation.

The control technology standards promulgated in 40 CFR Part 63 were reviewed to determine whether any promulgated standard is relevant to the LIB plant. Of the 133 NESHAPs promulgated in Part 63 (Subparts F through 7H), only 25 are major source MACT standards that include a standard for PM emissions or a specific metal HAP. The majority of these 25 standards relate to the metallurgical industry or fuel burning sources, which are not similar to the emission units at the LIB plant based on the volume and concentration of emissions and the dissimilarity of emission points. Excluding these source categories, the following list identifies the remaining major source categories with PM standards:

- Lime Manufacturing
- Mineral Wool Production
- Brick and Structural Clay Products Manufacturing
- Clay Ceramics Manufacturing

PUBLIC DOCUMENT

- Portland Cement Manufacturing
- Asphalt Processing and Asphalt Roofing Manufacturing
- Wool Fiberglass Manufacturing
- Taconite Iron Ore Processing
- Phosphoric Acid

Table 9 presents a summary of the PM emission standards for new units with numeric emission standards for PM under these potentially similar major source categories. Table 9 shows PM grain loading standards ranging from 0.02 to 0.04 gr/dscf and PM emission rates ranging from 0.02 to 0.42 lb/ton product. While the emission units identified in these remaining source categories are not necessarily similar to the LIB plant (e.g., lime and cement manufacturing operations will have much larger design capacities than the LIB plant processes), they aide in understanding USEPA's MACT determinations for source categories involving PM-HAPs.

PM or specific metal HAP standards also exist for 15 area (i.e., non-major) sources. While the LIB plant is defined as a major source of HAP based on uncontrolled emissions, the similar sources identified above in Section 4.2 are minor sources of HAP. Those similar sources that use as feedstock, generate as a byproduct, or produce as a product any one of the urban metal HAP (i.e., arsenic, cadmium, chromium, lead, manganese, or nickel) are subject to the Chemical Manufacturing Area Source (CMAS) rule in Subpart VVVVVV (6V).

PUBLIC DOCUMENT

Table 9. Summary of PM and PM-HAP Emission Standards

Source Category	40 CFR 63 Subpart	Emission Rate (lb/ton product)	Grain Loading (gr/dscf)
Lime Manufacturing	AAAAA	0.10 (kilns/lime coolers)	0.02 (material handling)
Mineral Wool Production	DDD	0.10 (cupola)	--
Brick and Structural Clay Products Manufacturing	JJJJJ	0.12 (tunnel kiln)	--
Clay Ceramics Manufacturing	KKKKK	0.42 (< 10 ton/hr) or 0.12 (>10 ton/hr) (tunnel kiln)	--
Portland Cement Manufacturing	LLL	0.02	--
Asphalt Processing/Asphalt Roofing Manufacturing	LLLLL	0.08 (mineral-surfaced) or 0.8 (smooth-surfaced)	--
Wool Fiberglass Manufacturing	NNN	0.5 (furnace)	--
Taconite Iron Ore Processing	RRRRR	--	0.005 (crushing/handling) 0.006 (furnace)
Phosphoric Acid	AA	0.060 (dryer)	0.040 (calciner)

Under the CMAS rule, the affected source is the facility-wide collection of chemical manufacturing production units (CMPU) and applies to all process vents within a CMPU. If metal HAP emissions from all process vents within a CMPU are greater than or equal to 400 pounds per year, the facility must reduce collective uncontrolled emissions of total metal HAP by at least 95 percent by weight by routing emissions from a sufficient number of the metal process vents through a closed-vent system to any combination of control devices. This required degree of control is less stringent than is achievable through the LIB plant design.

In conclusion, none of the identified rules promulgated under 40 CFR 63 present an emission limit that is more stringent than the degree of control achieved by the best controlled similar source.

PUBLIC DOCUMENT

5 CASE-BY-CASE MACT DETERMINATION

5.1 IDENTIFIED CONTROL TECHNOLOGY THAT ACHIEVES THE MAXIMUM DEGREE OF HAP EMISSION REDUCTION

As stated throughout this document, 40 CFR 63.43(d) specifies the manner in which a case-by-case MACT analysis must be conducted. In adhering to those specifications, two separate nationwide reviews were conducted to identify the maximum degree of HAP emissions reduction that is achieved at a similar source. While recognizing the limitations noted by USEPA in attempting to identify similar sources, as well as the maximum degree of HAP emission reduction that is achieved in practice, the results of this case-by-case MACT analysis are irrefutable and consistent between the two nationwide searches performed—the best controlled source similar to the LIB plant employs a fabric filter. This conclusion is corroborated by review of data available from the USEPA APCTC.

5.2 PROPOSED EMISSION LIMITATION

Pursuant to 40 CFR 63.43(e), an application for a MACT determination must specify a control technology that, if properly operated and maintained, will meet the MACT emission limitation or standard as determined according to the principles set forth in paragraph (d) of that section.

As demonstrated in various sections of this report, a properly designed (appropriate gas-to-cloth ratio) and operated (within the manufacturer's specified pressure drop across the filter system) fabric filter will have an extremely high PM collection efficiency and is considered MACT for the LIB plant. In accordance with 40 CFR 63.43(e), therefore, BASF proposes to use fabric filters for PM and PM-HAP emission control on all LIB plant process operations except the kilns. PM emissions from the kilns are inherently low (0.13 ton/yr and 0.0010 gr/dscf) and control is unnecessary; therefore, no additional control is proposed for the kilns.

Appendix D provides supporting documentation of the manufacturer's equipment specifications for the control equipment and associated blowers at the LIB plant.

PUBLIC DOCUMENT

5.3 DISCUSSION OF OTHER ASPECTS OF CASE-BY-CASE MACT

5.3.1 Identification of Fabric Filter as MACT

The data presented in Table 5 demonstrate that fabric filters and ESPs can achieve comparable levels of control. Data presented in Table 7 and Table 8 (i.e., other battery material production permits and the RBLC determinations), however, demonstrate that in practice fabric filters are used at similar sources to achieve the highest degree of HAP emission control. These evaluations of similar sources clearly dictate that fabric filters be considered the MACT control technology.

5.3.2 Form of the Proposed Emission Limitation

The proposed emission limitation for the LIB plant takes the form of an equipment design and operational standard. An appropriately designed and operated fabric filter will achieve the highest degree of HAP emission control. Specifications for fabric filters employed at the LIB plant have/will include the appropriate air-to-cloth ratio needed to achieve this HAP emission control. The actual form of the propose equipment design and operational standard may be specified as follows:

- Process equipment shall be designed, installed, and operated to minimize HAP emissions through the use of closed-pipe conveyance, equipment enclosures, and/or permanent total enclosures with all HAP-laden air from bins and enclosures routed to a fabric filter control device.
- HAP-laden air from all process operations, except for the kilns (Cathode-8 and Cathode-14), shall be routed to a pulse-jet fabric filter control device designed with an air-to-cloth ratio of no more than 5 acfm/ft^2 of cloth area.
- Fabric filters shall be operated and maintained in accordance with the manufacturer's recommendations, instructions, and operating manual(s).
- Equipment to continuously monitor the pressure drop across each fabric filter shall be properly installed and maintained; this equipment shall be operated when the associated process equipment is in operation, including periods of startup and shutdown. The acceptable pressure drop shall be based upon the manufacturer's specifications.

This approach to a proposed emission limitation is consistent with, and supported by, both the regulatory history of case-by-case MACT and

PUBLIC DOCUMENT

specific instructions from the OEPA. As stated in OEPA's letter to BASF's Site Director, dated September 30, 2013:

> [T]he proposed standard may be an emissions limitation, or if it is not feasible to prescribe or enforce an *(numeric)* emission limitation, the proposed standard may be the employment of a specific design, a work practice, an operational standard, or a combination. (italic text added)

This concept is mirrored in both the 112(g) and 112(j) procedures promulgated at 40 CFR 63.43(d)(3) and 40 CFR 63.53(b)(3), respectively. Several important factors must be considered when determining whether a numeric emission limitation can be prescribed or is enforceable. The first of these considerations is USEPA's expressed recognition that direct transfer of control equipment performance from one source to another is not always possible. As declared in the case-by-case MACT preamble:

> [t]he EPA recognizes that control efficiencies across similar sources may be different. The permitting authority is expected to use its judgment in determining when operating conditions are comparable across emission units. (61 FR page 68395, Dec 27, 1996)

A second factor to be considered is the inherently low emission rates produced by the process operations in the LIB plant. The high degree of control, coupled with the enclosed processes and low air flow rates will yield very low mass emission rates for processes equipped with control devices. These low rates were previously presented in Table 4 of this report. Generation of these low emission rates will represent an extreme challenge to source testing efforts, making such tests potentially meaningless. This is somewhat witnessed by the observation by the USEPA's APCTC verification test on filter fabrics during which the fabric used by the two LIB plant mills produced results that were below the detectable limit of the test equipment. (This observation was presented previously in Section 3.2 of this report.) USEPA's observation, coupled with the need to perform up to 15 separate emission tests at the LIB plant, makes enforcement of a numeric emission limitation a technical challenge and economically-costly venture. Although not equipped with control devices, the kilns operate with inherently low emissions as well, producing similar compliance demonstration challenges.

Finally, several of the processes in the LIB plant are intermittent operations. For example, the Central Vacuum Unit (Cathode-15) is only

PUBLIC DOCUMENT

operated during periods of maintenance or after an upset of process equipment. As such, the operation of this process is not regular or predictable, and a numeric emission limit for this process operation is likewise not feasible.

5.4 *PROPOSED OPERATIONAL/MONITORING STANDARDS*

The following operational standards are proposed to demonstrate continuous compliance with the equipment/operational emission limitation identified above. These proposed MACT standards include operation, monitoring, and recordkeeping requirements for the LIB plant.

1. HAP-laden air from the process operations listed above shall be vented to their respective fabric filter when the process equipment is in operation.

2. Discharges from the fabric filters listed above shall be vented to an after filter whenever the process equipment is in operation.
3. Equipment to continuously monitor the pressure drop across each fabric filter shall be properly installed, operated, and maintained when the controlled process equipment are in operation, including periods of startup and shutdown. The pressure drop across each fabric filter shall be recorded on a daily basis.
4. The monitoring equipment shall be installed, calibrated, operated, and maintained in accordance with the manufacturer's recommendations, instructions, and operating manual(s), unless any modifications are deemed necessary. The acceptable pressure drop shall be based upon the manufacturer's specifications.
5. Whenever the monitored value for the pressure drop deviates from the limit or range established in accordance with this permit, an investigation of the cause of the deviation shall be promptly conducted, and records of the following information for each investigation shall be maintained:
    a. the date and time the deviation began;
    b. the magnitude of the deviation at that time;
    c. the date the investigation was conducted;
    d. the name(s) of the personnel who conducted the investigation; and
    e. the findings and recommendations.

PUBLIC DOCUMENT

6. In response to each required investigation to determine the cause of a deviation, prompt corrective actions shall be conducted to bring the operation of the control equipment within the acceptable range specified in this permit, unless it is determined that corrective action is not necessary and the reasons for that determination and the date and time the deviation ended are documented. Records of the following information for each corrective action taken shall be maintained:

    a. a description of the corrective action;

    b. the date corrective action was completed;

    c. the date and time the deviation ended;

    d. the total period of time (in minutes) during which there was a deviation;

    e. the pressure drop readings immediately after the corrective action was implemented; and

    f. the name(s) of the personnel who performed the work.

    Investigation and records required by this paragraph do not eliminate the need to comply with the requirements of OAC rule 3745-15-06 if it is determined that a malfunction has occurred.

PUBLIC DOCUMENT

6 CONCLUSIONS

The BASF LIB plant sited at the Elyria, Ohio, facility has been designed to satisfy a growing demand for new energy technology. The plant incorporates state-of-the-art equipment and environmental control strategies that maximize material usage and recovery.

In part because this industry represents a relatively new source category, USEPA has not developed standards specific to the source category, and a new major source of HAP in the industry must apply for a case-by-case MACT determination. This analysis satisfies this case-by-case MACT requirement. BASF will comply with the proposed case-by-case MACT by implementing the equipment/operational emission limitations specified in this analysis. The HAP emission limitation at the BASF LIB plant is the use of fabric filters with design specifications that will achieve the highest degree of HAP emission control. A nationwide search of similar facilities, including other known cathode material manufacturing facilities, yielded results demonstrating that no more stringent emission limitation is achieved at any similar source.

Establishing numeric emission limitations on the operations at the LIB plant is not technically feasible from an enforcement standpoint, nor is it economically feasible to incur the costs associated with testing the large number of process operations in order to demonstrate compliance with an emission limit while yielding undetectable amounts of HAPs. The LIB plant in Elyria, therefore, will operate under equipment design and operational conditions that produce the maximum degree of HAP emission control achievable in practice.

PUBLIC DOCUMENT

APPENDIX A – CASE-BY-CASE MACT REGULATIONS

PUBLIC DOCUMENT

40 CFR Part 63--National Emission Standards for Hazardous Air Pollutants for Affected Source Categories

Subpart B--Requirements for Control Technology Determinations for Major Sources

§63.40 Applicability of §§63.40 through 63.44.

(a) Applicability. The requirements of §§63.40 through 63.44 of this subpart carry out section 112(g)(2)(B) of the 1990 Amendments.

(b) Overall requirements. The requirements of §§63.40 through 63.44 of this subpart apply to any owner or operator who constructs or reconstructs a major source of hazardous air pollutants after the effective date of section 112(g)(2)(B) (as defined in §63.41) and the effective date of a title V permit program in the State or local jurisdiction in which the major source is (or would be) located unless the major source in question has been specifically regulated or exempted from regulation under a standard issued pursuant to section 112(d), section 112(h), or section 112(j) and incorporated in another subpart of part 63, or the owner or operator of such major source has received all necessary air quality permits for such construction or reconstruction project before the effective date of section 112(g)(2)(B).

(c) Exclusion for electric utility steam generating units. The requirements of this subpart do not apply to electric utility steam generating units unless and until such time as these units are added to the source category list pursuant to section 112(c)(5) of the Act.

(d) Relationship to State and local requirements. Nothing in this subpart shall prevent a State or local agency from imposing more stringent requirements than those contained in this subpart.

(e) Exclusion for stationary sources in deleted source categories. The requirements of this subpart do not apply to stationary sources that are within a source category that has been deleted from the source category list pursuant to section 112(c)(9) of the Act.

(f) Exclusion for research and development activities. The requirements of this subpart do not apply to research and development activities, as defined in §63.41.

§63.41 Definitions.

Terms used in this subpart that are not defined in this section have the meaning given to them in the Act and in subpart A.

Affected source means the stationary source or group of stationary sources which, when fabricated (on site), erected, or installed meets the definition of "construct a

PUBLIC DOCUMENT

major source" or the definition of "reconstruct a major source" contained in this section.

Affected States are all States:

(1) Whose air quality may be affected and that are contiguous to the State in which a MACT determination is made in accordance with this subpart; or

(2) Whose air quality may be affected and that are within 50 miles of the major source for which a MACT determination is made in accordance with this subpart.

Available information means, for purposes of identifying control technology options for the affected source, information contained in the following information sources as of the date of approval of the MACT determination by the permitting authority:

(1) A relevant proposed regulation, including all supporting information;

(2) Background information documents for a draft or proposed regulation;

(3) Data and information available for the Control Technology Center developed pursuant to section 113 of the Act;

(4) Data and information contained in the Aerometric Informational Retrieval System including information in the MACT data base;

(5) Any additional information that can be expeditiously provided by the Administrator; and

(6) For the purpose of determinations by the permitting authority, any additional information provided by the applicant or others, and any additional information considered available by the permitting authority.

Construct a major source means:

(1) To fabricate, erect, or install at any greenfield site a stationary source or group of stationary sources which is located within a contiguous area and under common control and which emits or has the potential to emit 10 tons per year of any HAP's or 25 tons per year of any combination of HAP, or

(2) To fabricate, erect, or install at any developed site a new process or production unit which in and of itself emits or has the potential to emit 10 tons per year of any HAP or 25 tons per year of any combination of HAP, unless the process or production unit satisfies criteria in paragraphs (2)(i) through (vi) of this definition.

(i) All HAP emitted by the process or production unit that would otherwise be controlled under the requirements of this subpart will be controlled by emission

PUBLIC DOCUMENT

control equipment which was previously installed at the same site as the process or production unit;

(ii)(A) The permitting authority has determined within a period of 5 years prior to the fabrication, erection, or installation of the process or production unit that the existing emission control equipment represented best available control technology (BACT), lowest achievable emission rate (LAER) under 40 CFR part 51 or 52, toxics--best available control technology (T-BACT), or MACT based on State air toxic rules for the category of pollutants which includes those HAP's to be emitted by the process or production unit; or

(B) The permitting authority determines that the control of HAP emissions provided by the existing equipment will be equivalent to that level of control currently achieved by other well-controlled similar sources (i.e., equivalent to the level of control that would be provided by a current BACT, LAER, T-BACT, or State air toxic rule MACT determination);

(iii) The permitting authority determines that the percent control efficiency for emissions of HAP from all sources to be controlled by the existing control equipment will be equivalent to the percent control efficiency provided by the control equipment prior to the inclusion of the new process or production unit;

(iv) The permitting authority has provided notice and an opportunity for public comment concerning its determination that criteria in paragraphs (2)(i), (2)(ii), and (2)(iii) of this definition apply and concerning the continued adequacy of any prior LAER, BACT, T-BACT, or State air toxic rule MACT determination;

(v) If any commenter has asserted that a prior LAER, BACT, T-BACT, or State air toxic rule MACT determination is no longer adequate, the permitting authority has determined that the level of control required by that prior determination remains adequate; and

(vi) Any emission limitations, work practice requirements, or other terms and conditions upon which the above determinations by the permitting authority are applicable requirements under section 504(a) and either have been incorporated into any existing title V permit for the affected facility or will be incorporated into such permit upon issuance.

Control technology means measures, processes, methods, systems, or techniques to limit the emission of hazardous air pollutants through process changes, substitution of materials or other modifications;

(1) Reduce the quantity of, or eliminate emissions of, such pollutants through process changes, substitution of materials or other modifications;

(2) Enclose systems or processes to eliminate emissions;

(3) Collect, capture or treat such pollutants when released from a process, stack, storage or fugitive emissions point;

PUBLIC DOCUMENT

(4) Are design, equipment, work practice, or operational standards (including requirements for operator training or certification) as provided in 42 U.S.C. 7412(h); or

(5) Are a combination of paragraphs (1) through (4) of this definition.

Effective date of section 112(g)(2)(B) in a State or local jurisdiction means the effective date specified by the permitting authority at the time the permitting authority adopts a program to implement section 112(g) with respect to construction or reconstruction or major sources of HAP, or June 29, 1998 whichever is earlier.

Electric utility steam generating unit means any fossil fuel fired combustion unit of more than 25 megawatts that serves a generator that produces electricity for sale. A unit that co-generates steam and electricity and supplies more than one-third of its potential electric output capacity and more than 25 megawatts electric output to any utility power distribution system for sale shall be considered an electric utility steam generating unit.

Greenfield suite means a contiguous area under common control that is an undeveloped site.

List of Source Categories means the Source Category List required by section 112(c) of the Act.

Maximum achievable control technology (MACT) emission limitation for new sources means the emission limitation which is not less stringent that the emission limitation achieved in practice by the best controlled similar source, and which reflects the maximum degree of deduction in emissions that the permitting authority, taking into consideration the cost of achieving such emission reduction, and any non-air quality health and environmental impacts and energy requirements, determines is achievable by the constructed or reconstructed major source.

Notice of MACT Approval means a document issued by a permitting authority containing all federally enforceable conditions necessary to enforce the application and operation of MACT or other control technologies such that the MACT emission limitation is met.

Permitting authority means the permitting authority as defined in part 70 or 71 of this chapter.

Process or production unit means any collection of structures and/or equipment, that processes assembles, applies, or otherwise uses material inputs to produce or store an intermediate or final product. A single facility may contain more than one process or production unit.

Reconstruct a major source means the replacement of components at an existing process or production unit that in and of itself emits or has that potential to emit

PUBLIC DOCUMENT

10 tons per year of any HAP or 25 tons per year of any combination of HAP, whenever:

(1) The fixed capital cost of the new components exceeds 50 percent of the fixed capital cost that would be required to construct a comparable process or production unit; and

(2) It is technically and economically feasible for the reconstructed major source to meet the applicable maximum achievable control technology emission limitation for new sources established under this subpart.

Research and development activities means activities conducted at a research or laboratory facility whose primary purpose is to conduct research and development into new processes and products, where such source is operated under the close supervision of technically trained personnel and is not engaged in the manufacture of products for sale or exchange for commercial profit, except in a de minimis manner.

Similar source means a stationary source or process that has comparable emissions and is structurally similar in design and capacity to a constructed or reconstructed major source such that the source could be controlled using the same control technology.

§63.42 Program Requirements Governing Construction or Reconstruction of Major Sources.

(a) Adoption of program. Each permitting authority shall review its existing programs, procedures, and criteria for preconstruction review for conformity to the requirements established by §§63.40 through 63.44, shall make any additions and revisions to its existing programs, procedures, and criteria that the permitting authority deems necessary to properly effectuate §§63.40 through 63.44, and shall adopt a program to implement section 112(g) with respect to construction or reconstruction of major sources of HAP. As part of the adoption by the permitting authority of a program to implement section 112(g) with respect to construction or reconstruction of major sources of HAP, the chief executive officer of the permitting authority shall certify that the program satisfies all applicable requirements established by §§63.40 through 63.44, and shall specify an effective date for that program which is not later than June 29, 1998. Prior to the specified effective date, the permitting authority shall publish a notice stating that the permitting authority has adopted a program to implement section 112(g) with respect to construction or reconstruction of major sources of HAP and stating the effective date, and shall provide a written description of the program to the Administrator through the appropriate EPA Regional Office. Nothing in this section shall be construed either:

(a)(1) To require that any owner or operator of a stationary source comply with any requirement adopted by the permitting authority which is not intended to

PUBLIC DOCUMENT

implement section 112(g) with respect to construction or reconstruction of major sources of HAP; or

(a)(2) To preclude the permitting authority from enforcing any requirements not intended to implement section 112(g) with respect to construction or reconstruction of major sources of HAP under any other provision of applicable law.

(b) Failure to adopt program. In the event that the permitting authority fails to adopt a program to implement section 112(g) with respect to construction or reconstruction of major sources of HAP with an effective date on or before June 29, 1998, and the permitting authority concludes that it is able to make case-by-case MACT determinations which conform to the provisions of §63.43 in the absence of such a program, the permitting authority may elect to make such determinations. However, in those instances where the permitting authority elects to make case-by-case MACT determinations in the absence of a program to implement section 112(g) with respect to construction or reconstruction of major sources of HAP, no such case- by-case MACT determination shall take effect until after it has been submitted by the permitting authority in writing to the appropriate EPA Regional Administrator and the EPA Regional Administrator has concurred in writing that the case-by-case MACT determination by the permitting authority is in conformity with all requirements established by §§63.40 through 63.44. In the event that the permitting authority fails to adopt a program to implement section 112(g) with respect to construction or reconstruction of major sources of HAP with an effective date on or before June 29, 1998, and the permitting authority concludes that it is unable to make case-by-case MACT determinations in the absence of such a program, the permitting authority may request that the EPA Regional Administrator implement a transitional program to implement section 112(g) with respect to construction or reconstruction of major sources of HAP in the affected State of local jurisdiction while the permitting authority completes development and adoption of a section 112(g) program. Any such transitional section 112(g) program implemented by the EPA Regional Administrator shall conform to all requirements established by §§63.40 through 63.44, and shall remain in effect for no more than 30 months. Continued failure by the permitting authority to adopt a program to implement section 112(g) with respect to construction or reconstruction of major sources of HAP shall be construed as a failure by the permitting authority to adequately administer and enforce its title V permitting program and shall constitute cause by EPA to apply the sanctions and remedies set forth in the Clean Air Act section 502(I).

(c) Prohibition. After the effective date of section 112(g)(2)(B) (as defined in §63.41) in a State or local jurisdiction and the effective date of the title V permit program applicable to that State or local jurisdiction, no person may begin actual construction or reconstruction of a major source of HAP in such State or local jurisdiction unless:

PUBLIC DOCUMENT

(c)(1) The major source in question has been specifically regulated or exempted from regulation under a standard issued pursuant to section 112(d), section 112(h) or section 112(j) in part 63, and the owner and operator has fully complied with all procedures and requirements for preconstruction review established by that standard, including any applicable requirements set forth in subpart A of this part 63; or

(c)(2) The permitting authority has made a final and effective case-by-case determination pursuant to the provisions of §63.43 such that emissions from the constructed or reconstructed major source will be controlled to a level no less stringent than the maximum achievable control technology emission limitation for new sources.

§63.43 Maximum Achievable Control Technology (MACT) Determinations for Constructed and Reconstructed Major Sources.

(a) Applicability. The requirements of this section apply to an owner or operator who constructs or reconstructs a major source of HAP subject to a case-by-case determination of maximum achievable control technology pursuant to §63.42(c).

(b) Requirements for constructed and reconstructed major sources. When a case-by-case determination of MACT is required by §63.42(c), the owner and operator shall obtain from the permitting authority an approved MACT determination according to one of the review options contained in paragraph (c) of this section.

(c) Review options. (1) When the permitting authority requires the owner or operator to obtain, or revise, a permit issued pursuant to title V of the Act before construction or reconstruction of the major source, or when the permitting authority allows the owner or operator at its discretion to obtain or revise such a permit before construction or reconstruction, and the owner or operator elects that option, the owner or operator shall follow the administrative procedures in the program approved under title V of the Act (or in other regulations issued pursuant to title V of the Act, where applicable).

(c)(2) When an owner or operator is not required to obtain or revise a title V permit (or other permit issued pursuant to title V of the Act) before construction or reconstruction, the owner or operator (unless the owner or operator voluntarily follows the process to obtain a title V permit) shall either, at the discretion of the permitting authority:

(c)(2)(i) Apply for and obtain a Notice of MACT Approval according to the procedures outlined in paragraphs (f) through (h) of this section; or

(c)(2)(ii) Apply for a MACT determination under any other administrative procedures for preconstruction review and approval established by the permitting authority for a State or local jurisdiction which provide for public participation in the determination, and ensure that no person may begin actual construction or reconstruction of a major source in that State or local jurisdiction

PUBLIC DOCUMENT

unless the permitting authority determines that the MACT emission limitation for new sources will be met.

(c)(3) When applying for a permit pursuant to title V of the Act, an owner or operator may request approval of case-by-case MACT determinations for alternative operating scenarios. Approval of such determinations satisfies the requirements of section 112(g) of each such scenario.

(c)(4) Regardless of the review process, the MACT emission limitation and requirements established shall be effective as required by paragraph (j) of this section, consistent with the principles established in paragraph (d) of this section, and supported by the information listed in paragraph (e) of this section. The owner or operator shall comply with the requirements in paragraphs (k) and (l) of this section, and with all applicable requirements in subpart A of this part.

(d) Principles of MACT determinations. The following general principles shall govern preparation by the owner or operator of each permit application or other application requiring a case-by-case MACT determination concerning construction or reconstruction of a major source, and all subsequent review of and actions taken concerning such an application by the permitting authority:

(d)(1) The MACT emission limitation or MACT requirements recommended by the applicant and approved by the permitting authority shall not be less stringent than the emission control which is achieved in practice by the best controlled similar source, as determined by the permitting authority.

(d)(2) Based upon available information, as defined in this subpart, the MACT emission limitation and control technology (including any requirements under paragraph (d)(3) of this section) recommended by the applicant and approved by the permitting authority shall achieve the maximum degree of reduction in emissions of HAP which can be achieved by utilizing those control technologies that can be identified from the available information, taking into consideration the costs of achieving such emission reduction and any non-air quality health and environmental impacts and energy requirements associated with the emission reduction.

(d)(3) The applicant may recommend a specific design, equipment, work practice, or operational standard, or a combination thereof, and the permitting authority may approve such a standard if the permitting authority specifically determines that it is not feasible to prescribe or enforce an emission limitation under the criteria set forth in section 112(h)(2) of the Act.

(d)(4) If the Administrator has either proposed a relevant emission standard pursuant to section 112(d) or section 112(h) of the Act or adopted a presumptive MACT determination for the source category which includes the constructed or reconstructed major source, then the MACT requirements applied to the constructed or reconstructed major source shall have considered those MACT

PUBLIC DOCUMENT

emission limitations and requirements of the proposed standard or presumptive MACT determination.

(e) Application requirements for a case-by-case MACT determination. (1) An application for a MACT determination (whether a permit application under title V of the Act, an application for a Notice of MACT Approval, or other document specified by the permitting authority under paragraph (c)(2)(ii) of this section) shall specify a control technology selected by the owner or operator that, if properly operated and maintained, will meet the MACT emission limitation or standard as determined according to the principles set forth in paragraph (d) of this section.

(e)(2) In each instance where a constructed or reconstructed major source would require additional control technology or a change in control technology, the application for a MACT determination shall contain the following information:

(e)(2)(i) The name and address (physical location) of the major source to be constructed or reconstructed;

(e)(2)(ii) A brief description of the major source to be constructed or reconstructed and identification of any listed source category or categories in which it is included;

(e)(2)(iii) The expected commencement date for the construction or reconstruction of the major source;

(e)(2)(iv) The expected completion date for construction or reconstruction of the major source;

(e)(2)(v) The anticipated date of start-up for the constructed or reconstructed major source;

(e)(2)(vi) The HAP emitted by the constructed or reconstructed major source, and the estimated emission rate for each such HAP, to the extent this information is needed by the permitting authority to determine MACT;

(e)(2)(vii) Any federally enforceable emission limitations applicable to the constructed or reconstructed major source;

(e)(2)(viii) The maximum and expected utilization of capacity of the constructed or reconstructed major source, and the associated uncontrolled emission rates for that source, to the extent this information is needed by the permitting authority to determine MACT;

(e)(2)(ix) The controlled emissions for the constructed or reconstructed major source in tons/yr at expected and maximum utilization of capacity, to the extent this information is needed by the permitting authority to determine MACT;

PUBLIC DOCUMENT

(e)(2)(x) A recommended emission limitation for the constructed or reconstructed major source consistent with the principles set forth in paragraph (d) of this section;

(e)(2)(xi) The selected control technology to meet the recommended MACT emission limitation, including technical information on the design, operation, size, estimated control efficiency of the control technology (and the manufacturer's name, address, telephone number, and relevant specifications and drawings, if requested by the permitting authority);

(e)(2)(xii) Supporting documentation including identification of alternative control technologies considered by the applicant to meet the emission limitation, and analysis of cost and non-air quality health environmental impacts or energy requirements for the selected control technology; and

(e)(2)(xiii) Any other relevant information required pursuant to subpart A.

(e)(3) In each instance where the owner or operator contends that a constructed or reconstructed major source will be in compliance, upon startup, with case-by-case MACT under this subpart without a change in control technology, the application for a MACT determination shall contain the following information:

(e)(3)(i) The information described in paragraphs (e)(2)(i) through (e)(2)(x) of this section; and

(e)(3)(ii) Documentation of the control technology in place.

(f) Administrative procedures for review of the Notice of MACT Approval. (1) The permitting authority will notify the owner or operator in writing, within 45 days from the date the application is first received, as to whether the application for a MACT determination is complete or whether additional information is required.

(f)(2) The permitting authority will initially approve the recommended MACT emission limitation and other terms set forth in the application, or the permitting authority will notify the owner or operator in writing of its intent to disapprove the application, within 30 calendar days after the owner or operator is notified in writing that the application is complete.

(f)(3) The owner or operator may present, in writing, within 60 calendar days after receipt of notice of the permitting authority's intent to disapprove the application, additional information or arguments pertaining to, or amendments to, the application for consideration by the permitting authority before it decides whether to finally disapprove the application.

(f)(4) The permitting authority will either initially approve or issue a final disapproval of the application within 90 days after it notifies the owner or operator of an intent to disapprove or within 30 days after the date additional information is received from the owner or operator; whichever is earlier.

PUBLIC DOCUMENT

(f)(5) A final determination by the permitting authority to disapprove any application will be in writing and will specify the grounds on which the disapproval is based. If any application is finally disapproved, the owner or operator may submit a subsequent application concerning construction or reconstruction of the same major source, provided that the subsequent application has been amended in response to the stated grounds for the prior disapproval.

(f)(6) An initial decision to approve an application for a MACT determination will be set forth in the Notice of MACT Approval as described in paragraph (g) of this section.

(g) Notice of MACT Approval. (1) The Notice of MACT Approval will contain a MACT emission limitation (or a MACT work practice standard if the permitting authority determines it is not feasible to prescribe or enforce an emission standard) to control the emissions of HAP. The MACT emission limitation or standard will be determined by the permitting authority and will conform to the principles set forth in paragraph (d) of this section.

(g)(2) The Notice of MACT Approval will specify any notification, operation and maintenance, performance testing, monitoring, reporting and record keeping requirements. The Notice of MACT Approval shall include:

(g)(2)(i) In addition to the MACT emission limitation or MACT work practice standard established under this subpart, additional emission limits, production limits, operational limits or other terms and conditions necessary to ensure Federal enforceability of the MACT emission limitation;

(g)(2)(ii) Compliance certifications, testing, monitoring, reporting and record keeping requirements that are consistent with the requirements of §70.6(c) of this chapter;

(g)(2)(iii) In accordance with section 114(a)(3) of the Act, monitoring shall be capable of demonstrating continuous compliance during the applicable reporting period. Such monitoring data shall be of sufficient quality to be used as a basis for enforcing all applicable requirements established under this subpart, including emission limitations;

(g)(2)(iv) A statement requiring the owner or operator to comply with all applicable requirements contained in subpart A of this part;

(g)(3) All provisions contained in the Notice of MACT Approval shall be federally enforceable upon the effective date of issuance of such notice, as provided by paragraph (j) of this section.

(g)(4) The Notice of MACT Approval shall expire if construction or reconstruction has not commenced within 18 months of issuance, unless the permitting authority has granted an extension which shall not exceed an additional 12 months.

PUBLIC DOCUMENT

(h) Opportunity for public comment on the Notice of MACT Approval. (1) The permitting authority will provide opportunity for public comment on the Notice of MACT Approval, including, at a minimum:

(h)(1)(i) Availability for public inspection in at least one location in the area affected of the information submitted by the owner or operator and of the permitting authority's initial decision to approve the application;

(h)(1)(ii) A 30-day period for submittal of public comment; and

(h)(1)(iii) A notice by prominent advertisement in the area affected of the location of the source information and initial decision specified in paragraph (h)(1)(i) of this section.

(h)(2) At the discretion of the permitting authority, the Notice of MACT Approval setting forth the initial decision to approve the application may become final automatically at the end of the comment period if no adverse comments are received. If adverse comments are received, the permitting authority shall have 30 days after the end of the comment period to make any necessary revisions in its analysis and decide whether to finally approve the application.

(i) EPA notification. The permitting authority shall send a copy of the final Notice of MACT Approval, notice of approval of a title V permit application incorporating a MACT determination (in those instances where the owner or operator either is required or elects to obtain such a permit before construction or reconstruction), or other notice of approval issued pursuant to paragraph (c)(2)(ii) of this section to the Administrator through the appropriate Regional Office, and to all other State and local air pollution control agencies having jurisdiction in affected States.

(j) Effective date. The effective date of a MACT determination shall be the date the Notice of MACT Approval becomes final, the date of issuance of a title V permit incorporating a MACT determination (in those instances where the owner or operator either is required or elects to obtain such a permit before construction or reconstruction), or the date any other notice of approval issued pursuant to paragraph (c)(2)(ii) of this section becomes final.

(k) Compliance date. On and after the date of start-up, a constructed or reconstructed major source which is subject to the requirements of this subpart shall be in compliance with all applicable requirements specified in the MACT determination.

(l) Compliance with MACT determinations. (1) An owner or operator of a constructed or reconstructed major source that is subject to a MACT determination shall comply with all requirements in the final Notice of MACT Approval, the title V permit (in those instances where the owner or operator either is required or elects to obtain such a permit before construction or

PUBLIC DOCUMENT

reconstruction), or any other final notice of approval issued pursuant to paragraph (c)(2)(ii) of this section, including but not limited to any MACT emission limitation or MACT work practice standard, and any notification, operation and maintenance, performance testing, monitoring, reporting, and recordkeeping requirements.

(l)(2) An owner or operator of a constructed or reconstructed major source which has obtained a MACT determination shall be deemed to be in compliance with section 112(g)(2)(B) of the Act only to the extent that the constructed or reconstructed major source is in compliance with all requirements set forth in the final Notice of MACT Approval, the title V permit (in those instances where the owner or operator either is required or elects to obtain such a permit before construction or reconstruction), or any other final notice of approval issued pursuant to paragraph (c)(2)(ii) of this section. Any violation of such requirements by the owner or operator shall be deemed by the permitting authority and by EPA to be a violation of the prohibition on construction or reconstruction in section 112(g)(2)(B) for whatever period the owner or operator is determined to be in violation of such requirements, and shall subject the owner or operator to appropriate enforcement action under the Act.

(m) Reporting to the Administrator. Within 60 days of the issuance of a final Notice of MACT Approval, a title V permit incorporating a MACT determination (in those instances where the owner or operator either is required or elects to obtain such a permit before construction or reconstruction), or any other final notice of approval issued pursuant to paragraph (c)(2)(ii) of this section, the permitting authority shall provide a copy of such notice to the Administrator, and shall provide a summary in a compatible electronic format for inclusion in the MACT data base.

§63.44 Requirements for Constructed or Reconstructed Major Sources Subject to a Subsequently Promulgated MACT Standard or MACT Requirement.

(a) if the Administrator promulgates an emission standard under section 112(d) or section 112(h) of the Act or the permitting authority issues a determination under section 112(j) of the Act that is applicable to a stationary source or group of sources which would be deemed to be a constructed or reconstructed major source under this subpart before the date that the owner or operator has obtained a final and legally effective MACT determination under any of the review options available pursuant to §63.43, the owner or operator of the source(s) shall comply with the promulgated standard or determination rather than any MACT determination under section 112(g) by the permitting authority, and the owner or operator shall comply with the promulgated standard by the compliance date in the promulgated standard.

(b) If the Administrator promulgates an emission standard under section 112(d) or section 112(h) of the Act or the permitting authority makes a determination under section 112(j) of the Act that is applicable to a stationary source or group of sources which was deemed to be a constructed or reconstructed major source

PUBLIC DOCUMENT

under this subpart and has been subject to a prior case-by-case MACT determination pursuant to §63.43, and the owner and operator obtained a final and legally effective case-by-case MACT determination prior to the promulgation date of such emission standard, then the permitting authority shall (if the initial title V permit has not yet been issued) issue an initial operating permit which incorporates the emission standard or determination, or shall (if the initial title V permit has been issued) revise the operating permit according to the reopening procedures in 40 CFR part 70 or part 71, whichever is relevant, to incorporate the emission standard or determination.

(b)(1) The EPA may include in the emission standard established under section 112(d) or section 112(h) of the Act a specific compliance date for those sources which have obtained a final and legally effective MACT determination under this subpart and which have submitted the information required by §63.43 to the EPA before the close of the public comment period for the standard established under section 112(d) of the Act. Such date shall assure that the owner or operator shall comply with the promulgated standard as expeditiously as practicable, but not longer than 8 years after such standard is promulgated. In that event, the permitting authority shall incorporate the applicable compliance date in the title V operating permit.

(b)(2) If no compliance date has been established in the promulgated 112(d) or 112(h) standard or section 112(j) determination, for those sources which have obtained a final and legally effective MACT determination under this subpart, then the permitting authority shall establish a compliance date in the permit that assures that the owner or operator shall comply with the promulgated standard or determination as expeditiously as practicable, but not longer than 8 years after such standard is promulgated or a section 112(j) determination is made.

(c) Notwithstanding the requirements of paragraphs (a) and (b) of this section, if the Administrator promulgates an emission standard under section 112(d) or section 112(h) of the Act or the permitting authority issues a determination under section 112(j) of the Act that is applicable to a stationary source or group of sources which was deemed to be a constructed or reconstructed major source under this subpart and which is the subject of a prior case-by-case MACT determination pursuant to §63.43, and the level of control required by the emission standard issued under section 112(d) or section 112(h) or the determination issued under section 112(j) is less stringent than the level of control required by any emission limitation or standard in the prior MACT determination, the permitting authority is not required to incorporate any less stringent terms of the promulgated standard in the title V operating permit applicable to such source(s) and may in its discretion consider any more stringent provisions of the prior MACT determination to be applicable legal requirements when issuing or revising such an operating permit.

PUBLIC DOCUMENT

Clean Air Act Section 112(d)(2) and 112(d)(3)

Definition of MACT for New Sources

The definition of MACT for new sources is found in section 112(d)(2) and (3) of the Clean Air Act:

> (2) STANDARDS AND METHODS.—Emissions standards promulgated under this subsection and applicable to new or existing sources of HAPs shall require the maximum degree of reduction in emissions of the HAPs subject to this section (including a prohibition on such emissions, where achievable) that the Administrator, taking into consideration the cost of achieving such emission reduction, and any non-air quality health and environmental impacts and energy requirements, determines is achievable for new or existing sources in the category or subcategory to which such emission standard applies, through application of measures, processes, methods, systems or techniques including, but not limited to, measures which—
>
> (A) reduce the volume of, or eliminate emissions of, such pollutants through process changes, substitution of materials or other modifications,
>
> (B) enclose systems or processes to eliminate emissions,
>
> (C) collect, capture or treat such pollutants when released from a process, stack, storage or fugitive emissions point,
>
> (D) are design, equipment, work practice, or operational standards (including requirements for operator training or certification) as provided in subsection (h), or
>
> (E) are a combination of the above.
>
> None of the measures described in subparagraphs (A) through (D) shall, consistent with the provisions of section 114(c), in any way compromise any United States patent or United States trademark right, or any confidential business information, or any trade secret or any other intellectual property right.
>
> (3) NEW AND EXISTING SOURCES.—The maximum degree of reduction in emissions that is deemed achievable for new sources in a category or subcategory shall not be less stringent than the emission control that is achieved in practice by the best controlled similar source, as determined by the Administrator.

PUBLIC DOCUMENT

APPENDIX B – SIMILAR SOURCE SEARCH RESULTS

PUBLIC DOCUMENT

Table B-1. Summary of Facilities Reviewed to Identify Sources Similar to BASF LIB Plant Operations

Company	Description	Types of Emission Units in Permit	Emission Limit Range	Control Requirements
1. A123 Systems - Romulus, MI	Manufacturer of nano-iron phosphate cathode powder and electrode coatings; fabrication of battery cells and modules; and assembly of complete battery pack systems for hybrid and electric vehicles.	Receiving and handling of battery powder raw materials (with dust collector). Milling of processed battery powders (with dust collector). Anode and cathode battery powder mixing and weighing (with dust collector).	0.02 lb PM/ 1,000 lb exhaust	• The permittee shall not operate any EU unless the fabric filter is installed, maintained, and operated in a satisfactory manner, including monitoring the pressure drop for the fabric filter on a continuous basis. • Monthly VE readings for each EU.
2. DOW Energy Materials – Midland, MI	Manufacturer of NMC cathode material.	Operations do not require an air permit under Michigan regulations.		
3. DOW-Kokam – Midland Battery Park	Produce manganese oxide cathode / graphite lithium-ion batteries for hybrid and electric vehicles.	Anode and binder dry ingredient material handling and mixing, and anode coating storage and manufacturing tanks controlled by dust collectors, HEPA filters, N2 blanketing system, and pipe-away PRVs.	0.002 lb PM/ 1,000 lb exhaust	• Shall not operate dry material operations unless dust collectors and HEPA filters are installed, maintained, and operated in a satisfactory manner, including continuous pressure drop monitoring. • Monthly VE readings for each EU.
		Cathode dry ingredient material handling and mixing, and cathode coating storage and manufacturing tanks controlled by dust collectors, HEPA filters, N2 blanketing system, and pipe-away PRVs.	0.001 lb PM/ 1,000 lb exhaust	
4. DOW-Kokam – Lee's Summit Battery Park	Produce manganese oxide cathode / graphite lithium-ion batteries for hybrid and electric vehicles.	Operations do not require an air permit under Missouri regulations.		

PUBLIC DOCUMENT

Company	Description	Types of Emission Units in Permit	Emission Limit Range	Control Requirements
5. EnerDel – Indianapolis, IN	Produce lithium-ion cells and packs for hybrid and electric vehicles. Primary lithium chemistries include: manganese spinel cathode and lithium titanate anode for high power applications, as well as manganese spinel cathode and amorphous carbon for high energy applications.	Facility-wide limit of 100 ton PM/yr, 10 ton individual HAP/yr, and 25 ton total HAP/yr to avoid major source status.		
		The PM emissions from the mixers EU7A, EU7C, and EU7E shall not exceed a combined emission rate of 2.26 lb/hr.	0.03 gr/dscf	• Shall operate baghouse (Dust Collector #1) at all times when EU7A, EU7C, and EU7E are not completely covered. • Daily pressure drop readings across the baghouse (Dust Collector #1) • Daily VE notations of Dust Collector #1 stack exhaust.
6. EnerG2, Inc. – Albany, OR	Produce high energy density nano-carbon for ultracapacitors.	Permit Notice Information: The EnerG2 facility will manufacture activated carbon particles and use baghouses and a thermal oxidizer to control air pollutants. A small natural gas-fired boiler will be used to provide steam heat for the manufacturing processes. Milling (controlled by fabric filter) and product bagging (controlled by HEPA) during the carbon manufacturing processes.	0.1 gr/dscf	
7. ERACHEM COMILOG, INC. – Riviera Beach, MD	Produce manganese chemical derivatives designed for Specialties and Electronics applications, as well as for the Agrochemical industry. Portfolio includes high purity oxides, anhydrous salts, specialty metallurgical products and reduced ore.	Milling, classifier, material handling and transfer, and roaster/calciner.	0.03 gr/dscf	Exhaust gases from must vent through the dust collector before discharging to the atmosphere.
8. Johnson Controls – Holland, MI	Produce nickel-cobalt-metal battery cells and packs, as well as production of battery separators (by partner Entek) for hybrid and electric vehicles.	According to the Michigan Department of Environmental Quality, this facility recently submitted a permit application but a permit has not yet been issued.		

PUBLIC DOCUMENT

Company	Description	Types of Emission Units in Permit	Emission Limit Range	Control Requirements
9. LG Chem Michigan Incorporated – Holland, MI	Produce lithium-ion polymer battery cells for the GM Volt using a manganese-based cathode material and a proprietary separator.	Anode and cathode material metering and mixing controlled by a dust collector and activated carbon.	0.002 to 0.005 lb PM/ 1,000 lb exhaust	• Shall not operate EUs unless dust collector is installed, maintained, and operated in a satisfactory manner, including continuous pressure drop monitoring. • Monthly VE readings for each EU. **<u>Other emission limits:</u>** • 12-month rolling manganese emissions limit of 125 lb/yr. • 12-month rolling nickel emissions limit of 30 lb/yr. • 12-month rolling cobalt emissions limit of 24 lb/yr. • 12-month rolling emission limit for each individual HAP of 8.9 ton/yr. • 12-month rolling emission limit for total HAPs of 22.4 ton/yr.
10. NEI Corporation – Somerset, NJ	Manufacturer of NMC cathode material.	An Open Public Records Act request was submitted to the New Jersey Department of Environmental Protection (NJDEP) for any air permits issued to NEI Corporation. According to the NJDEP, no air permits have been issued to NEI Corporation.		
11. BASF Corporation – Troy, MI	Manufacturer of NiMH battery material.	Manganese sulfate and/or nickel sulfate bulk bag unloader. HEPA filter system. Manganese sulfate and/or nickel sulfate solution mixing tank. HEPA filter system. Cobalt sulfate and/or nickel sulfate bulk bag unloader. HEPA filter system. Cobalt sulfate and/or nickel sulfate solution mixing tank. HEPA filter system.	0.01 lb PM/ 1,000 lb exhaust	• Shall not operate any EU unless HEPA filter system is installed, maintained, and operated in a satisfactory manner. • Monthly VE readings for each EU.

PUBLIC DOCUMENT

Company	Description	Types of Emission Units in Permit	Emission Limit Range	Control Requirements
12. Rockwood Lithium – Kings Mountain, NC	Produce battery-grade lithium carbonate and lithium hydroxide.	Lithium hydroxide materials handling operation; lithium hydroxide materials handling operation; controlled by fabric filter (1,808 square feet of filter area). Subject only to state PM emission limits based on process weight rate. Facility-wide limit of 100 ton PM/yr, 10 ton individual HAP/yr, and 25 ton total HAP/yr to avoid major source status.		• Shall perform periodic inspections and maintenance (I&M) of fabric filter as recommended by the manufacturer and perform an annual (for each 12 month period following the initial inspection) internal inspection of each bagfilter system.
13. Toda America – Battle Creek, MI	Manufacturer of NMC cathode material.	Raw material handling and mixing (with fabric filter).	0.001 to 0.05 lb PM/ 1,000 lb exhaust	• The permittee shall not operate Line 1 or 2 dry material operations unless the fabric filters are installed, maintained, and operated in a satisfactory manner, including but not limited to maintaining a pressure drop range across each fabric filter according to the manufacturer's specifications. • Install, calibrate, maintain, and operate a device to monitor the pressure drop for each fabric filter on a continuous basis. • The permittee shall not operate the lines unless the wet scrubbers are installed, maintained, and operated in a satisfactory manner, including continuously monitoring the scrubber liquid flow rate and maintaining it at a minimum of 0.22 gal/min. • Monthly VE readings. **<u>Other emission limits:</u>** • 12-month rolling nickel emissions limit of 145 lb/yr.
		Calcination mixer controlled by a fabric filter	0.001 lb PM/ 1,000 lb exhaust	
		Intermediate material handling and mixing (with fabric filter).	0.01 to 0.033 lb PM/ 1,000 lb exhaust	
		Calcination process (with wet scrubber).	0.001 lb PM/ 1,000 lb exhaust	

PUBLIC DOCUMENT

APPENDIX C – RBLC SEARCH RESULTS

PUBLIC DOCUMENT

The USEPA maintains a database of control technology determinations made throughout the United States. This database represents the largest compendium available in the field of air pollutant source requirements and control capabilities, and is a useful resource when conducting a case-by-case MACT analysis. The RBLC database was queried for all PM determinations from January 1, 2008 to present (a full 5 year period, plus the remainder of 2013). The query returns information for any process that has a PM determination. Each process could include several records for other pollutants as well; therefore, the number of records returned in any query may not all be related to PM. A total of 5,918 records were obtained from the query, downloaded into an Access database, and filtered to list only PM records (approximately 48% of the total records) exclude records for operations that are not relevant to the LIB plant.

Two separate screening methods were employed to evaluate the RBLC records for operations that are similar to the LIB plant. For both of these methods, all records for fuel combustion sources, such as coal, oil, or natural gas-fired boilers, were excluded from further consideration. There are no fuel combustion sources associated with the LIB plant; therefore, these records were removed because they failed the "similar design" criteria. Fuel combustion sources would produce larger volumes of air (i.e., combustion gases) than produced in the LIB plant, and the particulate will be much smaller than found in the LIB plant operations. This initial filtering removed approximately two thirds of the records. The remaining 1,050 PM records were evaluated using both of the following two methods:

1. Filter the PM records by industrial source category (i.e., SIC code) and use engineering judgment and general knowledge of the processes to exclude those not similar to the LIB plant. These records were removed because they failed the "similar design" and/or "similar capacity" criteria. Records excluded using this method were related to sources such as large material processing and handling sources (e.g., cement and lime kilns), because they are much larger, both in gas volumes and particulate mass loadings, than the types of sources at the LIB plant.

2. Identify the records that report throughput capacity data, and exclude all records that have reported hourly or annual throughputs more than 10 times greater than the hourly or annual LIB plant throughput rates. These records were removed because they failed the "similar capacity" criteria.

PUBLIC DOCUMENT

The first method was to filter the records by SIC group as presented in Table C-1 and then use general knowledge of the processes to exclude those not similar to the LIB plant. Once filtered by SIC group, additional records within SIC groups were excluded as appropriate (e.g., fuel burning processes). Table C-2 presents a detailed summary of the records potentially relevant to the LIB plant operations.

Table C-1. Summary of SIC Categories Identified in RBLC PM Records from January 1, 2008 to Present

SIC Code	SIC Description	Does SIC Represent a Similar Source?	Why Not?
0	(miscellaneous)	No	Wrong pollutant; Boilers
28	(chemical plant cooling tower)	No	Pollutant is mist
147	(lime silos at precipated calcium carbonate plant)	No	Pollutant is mist
173	(fuel combustion)	No	High flow
242	(fuel combustion)	No	High flow
262	(fuel combustion)	No	High flow
361	(fuel combustion)	No	High flow
491	(fuel combustion and cooling towers)	No	Pollutant is mist
493	(fuel combustion)	No	High flow
701	(fuel combustion)	No	High flow
971	(fuel combustion)	No	High flow
1011	Iron Ores	No	High flow
1311	Crude Petroleum and Natural Gas	No	Wrong pollutant
1321	Natural Gas Liquids	No	No PM
1382	Oil and Gas Field Exploration Services	No	No PM
1474	Potash, Soda, and Borate Minerals	No	Boiler
1731	Electrical Work	No	NA
1771	Portland Cement	No	High flow
2032	Canned Specialties	No	Wrong pollutant
2046	Wet Corn Milling	No	Wet PM
2075	Soybean Oil Mills	No	Wet PM
2079	Shortening, Table Oils, Margarine, and Other Edible Fats and Oils, Not Elsewhere Classified	No	VOC/acid
2421	Sawmills and Planing Mills, General	No	Large PM
2493	Reconstituted Wood Products	No	Large PM
2611	Pulp Mills	No	Wrong pollutant
2621	Paper Mills	No	High flow
2711	Newspapers: Publishing, or Publishing and Printing	No	VOC
2813	Industrial Gases	No	Wrong pollutant
2816	Inorganic Pigments	Potentially	
2819	Industrial Inorganic Chemicals, Not Elsewhere Classified	Potentially	
2821	Plastics Materials, Synthetic Resins, and Nonvulcanizable Elastomers	No	Boilers; heaters
2822	Synthetic Rubber (Vulcanizable Elastomers)	No	Large PM
2869	Industrial Organic Chemicals, Not Elsewhere Classified	No	Boilers; generators
2873	Nitrogenous Fertilizers	No	High flow

PUBLIC DOCUMENT

SIC Code	SIC Description	Does SIC Represent a Similar Source?	Why Not?
2895	Carbon Black	Potentially	
2899	Chemicals and Chemical Preparations, Not Elsewhere Classified	Potentially	
2911	Petroleum Refining	No	High flow
3011	Tires and Inner Tubes	No	Wrong pollutant
3211	Flat Glass	No	High flow
3241	Cement, Hydraulic	No	High flow
3251	Brick and Structural Clay Tile	No	High flow
3274	Lime	Potentially	
3295	Minerals and Earths, Ground or Otherwise Treated	Potentially	
3296	Mineral Wool	No	Condensables/wet PM
3312	Steel Works, Blast Furnaces (Including Coke Ovens), and Rolling Mills	No	High flow
3313	Electrometallurgical Products, Except Steel	No	High flow
3321	Gray and Ductile Iron Foundries	No	High flow
3325	Steel Foundries, Not Elsewhere Classified	No	Fugitives
3334	Primary Production of Aluminum	No	High flow/acid
3341	Secondary Smelting and Refining of Nonferrous Metals	No	High flow/acid
3351	Rolling, Drawing, and Extruding Of Copper	No	Oily
3365	Aluminum Foundries	No	High flow
3511	Steam, Gas, and Hydraulic Turbines, and Turbine Generator Set Units	No	High flow
3624	Carbon and Graphite Products	Potentially	
3711	Motor Vehicles and Passenger Car Bodies	No	VOC
3713	Truck and Bus Bodies	No	VOC
3724	Aircraft Engines and Engine Parts	No	Specialty
4226	Special Warehousing and Storage, Not Elsewhere Classified	No	NA
4812	Radiotelephone Communications	No	NA
4911	Electric Services	No	NA
4922	Natural Gas Transmission	No	NOx
4923	Natural Gas Transmission and Distribution	No	NOx
4925	Mixed, Manufactured, or Liquefied Petroleum Gas Production and/or	No	NA
4931	Electric and Other Services Combined	No	NA
4939	Combination Utilities, Not Elsewhere Classified	No	Generators
4952	Sewerage Systems	No	Wrong pollutant
4953	Refuse Systems	No	High flow
4961	Steam and Air-Conditioning Supply	No	NA
5052	Coal and Other Minerals and Ores	No	Pollutant is mist
7011	Hotels and Motels	No	NA
8221	Colleges, Universities, and Professional Schools	No	Boilers
9711	National Security	No	NA

NA = not applicable
NOx = nitrogen oxides
PM = particulate matter
VOC = volatile organic compounds

PUBLIC DOCUMENT

Table C-2. Summary of RBLC Records Potentially Relevant to the LIB Plant Operations

SIC Code	Facility Description	Process Name	Control Method Description	Emission Limit	Emission Limit Unit	Percent Efficiency (a)
2816	Titanium Dioxide Pigment Manufacturing	No. 7 Pigment Grinding Feed Bin (AK-107)	Baghouse	0.005	gr/dscf	
2816	Titanium Dioxide Pigment Manufacturing	No. 7 Pigment Grinding Feed Bin (AK-107)	Baghouse	0.01	gr/dscf	
2816	Titanium Dioxide Pigment Manufacturing	No. 7 Pigment Grinding Feed Bin (AK-107)	Baghouse	0.01	gr/dscf	
2819	Activated Carbon Production Facility	Carbon Production	Fabric filter	0.01	gr/dscf	
2819	Activated Carbon Production Facility	Carbon Production	Fabric filter	0.01	gr/dscf	
2819	Activated Carbon Production Facility	Carbon Production	Fabric filter	0.01	gr/dscf	
2895	Furnace Carbon Black Production	Carbon Black Production Units 3 and 4	Main Unit Filter Baghouse	3.01	lb/hr	
2895	Furnace Carbon Black Production	Carbon Black Production Units 3 and 4	Baghouse	3.01	lb/hr	
2899	A proposed manufacturing complex consists of an acrylamide plant, a powder plant, a diallyldimethylammoniumchloride (DADMAC) plant, a specialty products plant, an emulsion plant, a polyamine plant, a dimethylamineoethylacrylate (ADAM) plant, a chloromethy	ATBS Plant - Silos, Hoppers, Bagging Operations	No additional control	0.01	lb/hr	
2899	A proposed manufacturing complex consists of an acrylamide plant, a powder plant, a diallyldimethylammoniumchloride (DADMAC) plant, a specialty products plant, an emulsion plant, a polyamine plant, a dimethylamineoethylacrylate (ADAM) plant, a chloromethy	Powder Plant - Process Sources	Good equipment design and proper operations. Fueled by natural gas or propane	0.51	lb/hr	
2899	A proposed manufacturing complex consists of an acrylamide plant, a powder plant, a diallyldimethylammoniumchloride (DADMAC) plant, a specialty products plant, an emulsion plant, a polyamine plant, a dimethylamineoethylacrylate (ADAM) plant, a chloromethy	Powder Plant - Process Sources	Good equipment design and proper operations. Fueled by natural gas or propane	0.41	lb/hr	
2899	A proposed manufacturing complex consists of an acrylamide plant, a powder plant, a diallyldimethylammoniumchloride (DADMAC) plant, a specialty products plant, an emulsion plant, a polyamine plant, a dimethylamineoethylacrylate (ADAM) plant, a chloromethy	Powder Plant Packaging/Loading Areas	Dust Filters	0.1	lb/hr	

PUBLIC DOCUMENT

SIC Code	Facility Description	Process Name	Control Method Description	Emission Limit	Emission Limit Unit	Percent Efficiency (a)
2899	A proposed manufacturing complex consists of an acrylamide plant, a powder plant, a diallyldimethylammoniumchloride (DADMAC) plant, a specialty products plant, an emulsion plant, a polyamine plant, a dimethylamineoethylacrylate (ADAM) plant, a chloromethy	Powder Plant Packaging/Loading Areas	Dust filters	0.11	lb/hr	
3274	Lime manufacturing plant. Dolomitic lime is produced from limestone containing 30 to 45% magnesium carbonate.	Dust Load-out System	Baghouse with 99.5% capture efficiency. Mechanical enclosure for conveying equipment.	8.1	ton/yr	
3274	Lime manufacturing plant. Dolomitic lime is produced from limestone containing 30 to 45% magnesium carbonate.	Lime Load-Out, Screening, Transfer, Storage	Baghouses (2) which shall achieve 99.5% capture efficiency.	3.32	ton/yr	
3274	Lime manufacturing plant. Dolomitic lime is produced from limestone containing 30 to 45% magnesium carbonate.	Product Transfer, Processed Stone, Conveying at Kiln	Baghouse	1.23	ton/yr	
3295	The Carbo Ceramics, Inc. facility in McIntyre, GA is engaged in the production of ceramic pellets for use in the natural gas mining industry. The major raw materials are alumina-rich clay, water, and bauxite.	Alumina-Rich Clay, Water, and Bauxite	Addition of a baghouse to control PM emissions as required in 40 CFR 60 Subpart NSPS UUU.	0.01	gr/dscf	99
3295	Pyramax Ceramics plans to construct a manufacturing facility for the production of proppant beads for use in the oil and gas industry. The major raw material is clay. The clay is mixed with chemicals and then fired in a kiln to produce ceramic beads.	Material Handling	Baghouse	0.005	gr/dscf	99
3295	Pyramax Ceramics plans to construct a manufacturing facility for the production of proppant beads for use in the oil and gas industry. The major raw material is clay. The clay is mixed with chemicals and then fired in a kiln to produce ceramic beads.	Material Handling	Baghouse	0.005	gr/dscf	99

PUBLIC DOCUMENT

SIC Code	Facility Description	Process Name	Control Method Description	Emission Limit	Emission Limit Unit	Percent Efficiency (a)
3295	Pyramax Ceramics plans to construct a manufacturing facility for the production of proppant beads for use in the oil and gas industry. The major raw material is clay. The clay is mixed with chemicals and then fired in a kiln to produce ceramic beads.	Material Handling	Baghouse	0.005	gr/dscf	99
3624	Graphite Electrode Manufacturing Facility	Cleaning and Inspection	Baghouse	0.005	gr/dscf	
3624	Graphite Electrode Manufacturing Facility	Graphitizing Process (Gulper System, Dust Bins)	Baghouse	0.005	gr/dscf	
3624	Graphite Electrode Manufacturing Facility	Graphitizing Process (Gulper System, Dust Bins)	Baghouse	0.005	gr/dscf	
3624	Graphite Electrode Manufacturing Facility	Graphitizing Process (Gulper System, Dust Bins)	Baghouse	0.005	gr/dscf	
3624	Graphite Electrode Manufacturing Facility	Machining and Shipping	Baghouse	0.005	gr/dscf	
3624	Graphite Electrode Manufacturing Facility	Insulating Media Receiving	Baghouse	0.005	gr/dscf	
3624	Graphite Electrode Manufacturing Facility	Mill, Mix, and Extrusion Process Including Mixers	Baghouse/Dry Fume Scrubber	0.005	gr/dscf	
3624	Graphite Electrode Manufacturing Facility	Cleaning and Inspection	Baghouse	0.005	gr/dscf	
3624	Graphite Electrode Manufacturing Facility	Cleaning and Inspection	Baghouse	0.005	gr/dscf	
3624	Graphite Electrode Manufacturing Facility	Machining and Shipping	Baghouse	0.005	gr/dscf	
3624	Graphite Electrode Manufacturing Facility	Machining and Shipping	Baghouse	0.005	gr/dscf	
3624	Graphite Electrode Manufacturing Facility	Mill, Mix, and Extrusion	Baghouse	0.005	gr/dscf	
3624	Graphite Electrode Manufacturing Facility	Rebake Load and Unload/Graphitizing Preparation	Baghouse	0.005	gr/dscf	
3624	Graphite Electrode Manufacturing Facility	Rebake Load and Unload/Graphitizing Preparation	Baghouse	0.005	gr/dscf	
3624	Graphite Electrode Manufacturing Facility	Bake Load and Unload and Baked Electrode Cleaning Process	Baghouse	0.005	gr/dscf	

PUBLIC DOCUMENT

SIC Code	Facility Description	Process Name	Control Method Description	Emission Limit	Emission Limit Unit	Percent Efficiency (a)
3624	Graphite Electrode Manufacturing Facility	Mill, Mix, and Extrusion	Baghouse	0.005	gr/dscf	
3624	Graphite Electrode Manufacturing Facility	Insulating Media Receiving	Baghouse	0.005	gr/dscf	
3624	Graphite Electrode Manufacturing Facility	Mill, Mix, and Extrusion Process Including Mixers	Baghouse/Dry Fume Scrubber	0.005	gr/dscf	
3624	Graphite Electrode Manufacturing Facility	Mill, Mix, and Extrusion Process Including Mixers	Baghouse/Dry Fume Scrubber	0.005	gr/dscf	
3624	Graphite Electrode Manufacturing Facility	Rebake Load and Unload/Graphitizing Preparation	Baghouse	0.005	gr/dscf	
3624	Graphite Electrode Manufacturing Facility	Bake Load and Unload and Baked Electrode Cleaning Process	Baghouse	0.005	gr/dscf	
3624	Graphite Electrode Manufacturing Facility	Bake Load and Unload and Baked Electrode Cleaning Process	Baghouse	0.005	gr/dscf	
3624	Graphite Electrode Manufacturing Facility	Insulating Media Receiving	Baghouse	0.005	gr/dscf	
3624	Graphite Electrode Manufacturing Facility	Mill, Mix, and Extrusion	Baghouse	0.005	gr/dscf	

a. If blank, no efficiency was specified in the RBLC database record.

PUBLIC DOCUMENT

The second approach to reviewing the RBLC records involved reviewing available information to identify PM records for processes with similar capacity to the LIB plant. This approach began with filtering out all the non-PM records and records for fuel burning sources. These two refinements alone reduced the potentially relevant records from 5,918 to 1,050. The remaining 1,050 records contained records for cooling towers, boilers, and generators that were not removed by the initial filtering of fuel burning sources. These records were excluded and the remaining records numbered 922, just 15.5% of the initial query results.

These 922 records were then reviewed for available throughput data with which to compare the LIB plant capacity. The LIB plant material throughput rate is 0.35 ton/hr and 3,083 ton/yr. Of the 922 records, only 50% have throughput data of any kind, 28% have ton/hr throughput rates, and 5% have ton/yr throughput rates. For this review, similar capacity is conservatively considered to be a throughput rate within 10 times that of the LIB plant. Without considering the type of facility (e.g., plasma torch cutting operations would never be considered a similar source), only 5% of the facilities have hourly throughput rates within 10 times that of the LIB plant (12 records out of 256 with ton/hr throughput rates) and only 28% of the facilities have annual throughput rates within 10 times that of the LIB plant (14 records out of 50 with ton/yr throughput rates). These 26 remaining records with a throughput rate similar to that of the LIB plant include the following:

- 12 material handling storage area sources at an iron ore concentrate pelletizing plant that utilize bin vents for control,
- a batch mixer and material elevator at a flat glass plant that utilizes a baghouse for control,
- 3 plasma torch cutting operations at a specialty steel plant that utilize a baghouse for control,
- 7 process operations at an iron foundry and aluminum engine casting plant that utilize baghouses for control, and
- a stock house and 2 lime silos for pig iron production at a steel mill that use baghouses for control.

Because there are no storage area sources utilizing bin vents for control at the LIB plant, the 12 records associated with the iron ore concentrate pelletizing plant were not considered similar in design to the LIB plant process operations and were excluded from further evaluation. The remaining 14 records were identified with this approach as having a similar capacity to the LIB plant and are presented in Table C-3. These 14 records were compared to those identified in Table C-2. No duplicates exist between the two record sets. In addition, further review verified that the records identified in Table C-2 either have no throughput data available in the RBLC database or their throughput rates are at least 10 times greater than the LIB throughput rate. Therefore, the records in Table C-2 would not be identified by the search described above.

PUBLIC DOCUMENT

Both approaches to the RBLC data, using engineering knowledge of the industries and review of the capacities of the processes identified in the search, result in the observation that less than 1% of the query results (i.e., 58 records) contain a PM determination potentially relevant to the LIB plant.

Table C-3. Summary of RBLC Records with Similar Capacity to the LIB Plant Operations

SIC Code	Facility Description	Process Name	Throughput	Control Method Description	Emission Limit	Emission Limit Unit	Percent Efficiency
3211	Flat Glass Plant	Cullet Return, Elevator Bottom & Top; Batch Mixer	650 ton/yr	Baghouse	0.005	gr/dscf	none[a]
3312	Specialty Steel	Plasma Torch Cutting Operation	30,000 ton/yr	Baghouse	0.01	lb/hr	99.9
3312	Specialty Steel	Plasma Torch Cutting Operation	30,000 ton/yr	Baghouse	0.01	lb/hr	99.9
3312	Specialty Steel	Plasma Torch Cutting Operation	30,000 ton/yr	Baghouse	0.01	lb/hr	99.9
3321	Iron Foundry and Aluminum Engine Casting Plant	DeFlash, DeCore, DeGate Operations (4)	26,762 ton/yr	Baghouse	0.031	lb/ton	
3321	Iron Foundry and Aluminum Engine Casting Plant	Mold Cooling Line (4)	26,762 ton/yr	Baghouse	0.1	lb/ton	
3321	Iron Foundry and Aluminum Engine Casting Plant	Mold shakeout with duct burner (4)	26,762 ton/yr	Baghouse	0.17	lb/ton	
3321	Iron Foundry and Aluminum Engine Casting Plant	Mold shakeout with duct burner (4)	26,762 ton/yr	Baghouse	0.35	lb/ton	
3321	Iron Foundry and Aluminum Engine Casting Plant	Casting cooling tunnel (4)	26,762 ton/yr	Baghouse	0.09	lb/ton	
3321	Iron Foundry and Aluminum Engine Casting Plant	Casting cooling tunnel (4)	26,762 ton/yr	Baghouse	0.17	lb/ton	
3321	Iron Foundry and Aluminum Engine Casting Plant	Mold Cooling Line (4)	26,762 ton/yr	Baghouse	0.2	lb/ton	
3325	Pig Iron at Steel Mill	Stock House 2 Baghouse Vent	2,462 ton/yr	Fabric Filter	0.04	lb/hr	99.5
3325	Pig Iron at Steel Mill	Coke Battery 2 FGD Lime Silo Unloading	21,810 ton/yr	Fabric Filter	0.005	lb/hr	99.5
3325	Pig Iron at Steel Mill	Coke Battery 1 FGD Lime Silo Unloading	21,810 ton/yr	Fabric Filter	0.005	lb/hr	99.5

a. No efficiency was specified in the RBLC database record.

PUBLIC DOCUMENT

APPENDIX D – CONTROL EQUIPMENT DESIGN DOCUMENTATION

PUBLIC DOCUMENT

Table D-1. Index of Control Equipment and Location of Supporting Documentation

Process Operation	Appendix D Page #	Dust Collector	DF Filter ID	Manufacturer	DF Cloth Area (ft^2)	Blower ID	Outlet Gas Flow Rate (acfm)	Gas-to-Filter Area Ratio
Cathode-1	**not in HAP service**	DF-1	F21050	National Bulk Equipment	75	21060	300	4.0
Cathode-3	D-3	DF-3	F31020	National Bulk Equipment	75	31040	300	4.0
Cathode-5	**not in HAP service**	DF-5	F23010	Netzsch	377	23080	1423	3.8
Cathode-2	**not in HAP service**	DF-2	F21535	MAC Process, Inc.	17	61040	30	1.8
Cathode-4	**D-5, D-9**	DF-4	F32015	MAC Process, Inc.	17		30	1.8
Cathode-6	**D-6, D-9**	DF-6	F41020	Littleford Day, Inc.	17		30	1.8
Cathode-7	**D-7, D-9**	DF-7	F61030	MAC Process, Inc.	671		1300	1.9
Cathode-9	**D-10**	DF-12	F70025	MAC Process, Inc.	16	69050	30	1.9
Cathode-13	**D-11**	DF-8	F69040	MAC Process, Inc.	671		1300	1.9
	D-15	DF-11	F67350	Vac-U-Max	95	67355	116	1.2
Cathode-10	**D-19**	DF-9	F71030	Netzsch	614	71050	2213	3.6
Cathode-8								
Cathode-14								
Cathode-11	**D-14**	DF-10	F92010	MAC Process, Inc.	1342	92030	2350	1.8
Cathode-12								
Cathode-15	**D-22**	DF-13	F11910	Vac-U-Max	95	11930	208	2.2

PUBLIC DOCUMENT

National Bulk Equipment

Cathode-3

Dust Collector DF-3

Filter ID: F31020

Blower ID: 31040

Forward Thinking. Real Results.
NATIONAL BULK EQUIPMENT

Bulk Bag Unloader System Manual

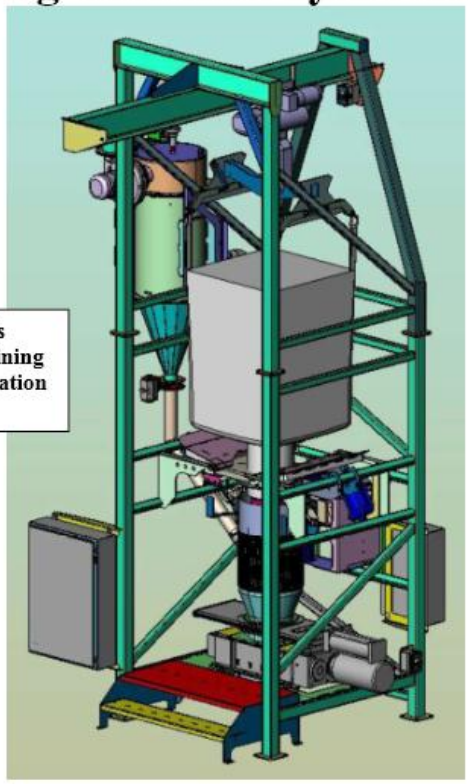

NOTE: Be sure this document is used in training employees on daily operation of this machine.

BASF
CSO# E601060135

49-1SP-BBU

National Bulk Equipment
12838 Stainless Drive Holland, MI 49424
Phone: (616) 399-2220 Fax: (616) 399-7365
www.nbe-inc.com

PUBLIC DOCUMENT

- Pneumatic Slide Gate: A 14" pneumatic gate is provided. The gate is designed to close during the empty bulk bag collapsing sequence. The gate is constructed in 304-2B stainless steel. Double acting air cylinders actuate the gate.
- Dust Collection: The system includes an integral reverse pulse jet dust collector. It uses (1) one Chemco 12.5" diameter x 26" long standard pleated filter cartridge with a filtration surface area of 75 square feet. The cartridge is easily changeable and has NBE's exclusive diffusion cone for efficient reverse pulse cleaning. The dust collection system is powered by a 1 HP /460 VAC / 3 phase / 60 Hz inverter duty motor and includes a VFD located in the control panel. The American Fan unit is rated to 300 CFM @ 6" w.c. static pressure. The fan blade and housing are constructed in Aluminum (Stainless Steel is available). An analog DP transmitter is provided for the unit; a secondary unit is provided on the Precursor (BS31010) unit. An air flow sensor is provided to indicate if there is no air flow. There is an on/off switch on the control panel for the dust collection unit. It can be turned to the off position during equipment cleaning or maintenance. When it is turned to the off position it reverse pulses to clean the cartridge and the captured dust is reclaimed into the receiving hopper. The dust collector is mounted on the bulk bag unloader frame. The dust collection system is designed to collapse the bulk bag.
- Controls: The enclosure is NEMA 4 type and all motor starters, VFD's, contactors, operator switches and an Allen Bradley CompactLogix PLC is supplied. The CompactLogix includes Ethernet IP communications. All Reliance motors supplied are in accordance with IEEE-841 requirements. The bulk bag unloader includes controls for the dust collector. The dust collector includes an On/Off switch for the fan and reverse pulse jet cleaning. A differential pressure transmitter is included and is mounted at the operator station. All devices within the control system conform to the BASF vendor list. An operator display is mounted on the operator enclosure and has been designed to adjust system variables and display equipment faults. The unit includes two separate enclosures; (1) has 460 VAC and the other is for the 24 VDC control voltage.
- Operator Platform

PUBLIC DOCUMENT

MAC Process, Inc.

Cathode-4

Dust Collectors DF-4

Filter IDs: F32015

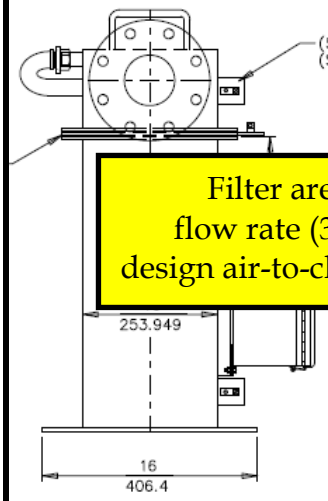

Filter area (17 ft²),
flow rate (30 cfm), and
design air-to-cloth ratio (1.8:1)

NOTES:
1. ALL DIMENSIONS ARE IN INCHES WITH SECONDARY UNITS IN MILLIMETERS.
2. 3/4" (19.05MM) FNPT, 60–90 PSI (4.1– 6.2 BARG) REGULATED CLEAN, DRY AIR REQUIRED. 1 SCFM VOLUME.
3. 10 GA. 304 STAINLESS STEEL CONSTRUCTION.
4. UNIT IS STRESSED FOR –17" Hg (–0.57 BAR).
5. (2) 1/4" (6.35MM) FNPT DIFFERENTIAL PRESSURE GAUGE PORTS MUST HAVE PIPE PLUGS IF DIFFERENTIAL PRESSURE GAUGE IS NOT USED.
6. TOP PLENUM REMOVABLE FOR ACCESS TO CARTRIDGE. DE–ENERGIZE TIMER CONTROL BEFORE WORKING ON UNIT. REMOVE BY UNBOLTING PLENUM FROM BAGHOUSE AND EXHAUST DUCT, DISCONNECT 3/4" (19.05MM) BRAIDED HOSE, AND LIFT OFF TOP PLENUM. (HEADER REMAINS ATTACHED TO HOUSING)
7. (2) 1/4" (6.35MM) THICK WHITE EPDM CLOSED CELL SPONGE GASKETS PROVIDED TO SEAL TUBESHEET.
8. NEMA 4 ENCLOSURE WITH TIMER CONTROL AND GOYEN SOLENOID VALVE, 24 VDC REQUIRED. (SOLENOID PRE–PLUMBED TO PULSE HEADER GOYEN DIAPHRAGM VALVE WITH 1/4" (6.35MM) POLY–FLO TUBING)
9. UNIT INCLUDES (1) POLIPLEET QP842 POLYESTER W/ PTFE TOP LOAD CARTRIDGE, PROVIDING 17 SQ. FT. OF MEDIA WITH AN AIR TO CLOTH RATIO OF 1.8:1 @ 30 CFM.
10. 1/4" (6.35MM) WHITE EPDM CLOSED CELL SPONGE GASKET AND (1) SPARE PROVIDED FOR FLANGE CONNECTIONS.
11. APPROX. WEIGHT: 50 LBS.
12. S/N: 167824–002–1
13. TAG: F32015
14. STAINLESS STEEL TAG.

FINISH NOTES:
15. INTERIOR PRODUCT CONTACT WELDS TO BE CONTINUOUS, GROUND SMOOTH TO CG24 GRIT FINISH.
16. INTERIOR AND EXTERIOR STAINLESS STEEL SURFACES TO BE PICKLED.

SPECIAL ASSEMBLY AND TEST NOTES:
17. FILTER TO BE BUBBLE TESTED AT 1/2 PSI (0.034 BARG)

CM105936

14 STAINLESS STEEL TAG INFORMATION

MANUFACTURE: Mac Process, Inc.
PLANT BUILT: SABETHA, KS
YEAR BUILT: 2011
MODEL: 19RTC1 STYLE II FILTER
SERIAL NO.: 167824–002–1
EQUIPMENT TAG NO.: F32015
PURCHASE ORDER NO.: 4557726298
DESIGN PRESSURE: +8.27 PSI (+0.57 BARG)
–17" Hg (–0.57 BARG)
DESIGN TEMPERATURE: 140°F (60°C)
EMPTY WEIGHT: 50 LBS.

This print is certified to be dimensionally correct to È 1/4 inch on all components, È 1/2 on overall dimensions up to 120 inches and È 1 1/2 on all dimensions greater than 120.
Mac Process, Inc.
BY Michael L Herbster DATE 10/11

macprocess
schenckprocess group

THIS MATERIAL IS THE PROPERTY OF MAC PROCESS INC. AND SHOULD NOT BE REPRODUCED,PUBLISHED OR DISCLOSED TO OTHERS WITHOUT AUTHORIZATION AND SHALL NOT BE USED IN ANY WAY AGAINST OR DETRIMENTAL TO MAC PROCESS INC., SABETHA, KANSAS.

19RTC1 STYLE II FILTER
FOR
BASF CORPORATION
(ELYRIA, OH)

DRAWN BY	DATE	UNLESS OTHERWISE SPECIFIED DIMENSIONS ARE IN INCHES TOLERANCES:			
MLH	03/24/11	DECIMAL: .XX ±.03 .XXX ±.005	FRACTION: ±1/16	OVERALL: 42.00 ±1/8 24.00 ±	
SCALE 1/8"=1"			JOB NO. 167824	DRAWING NO. CM105936	REV. D

PUBLIC DOCUMENT

Littleford Day, Inc.

Cathode-6

Dust Collector DF-6

Filter ID: F41020

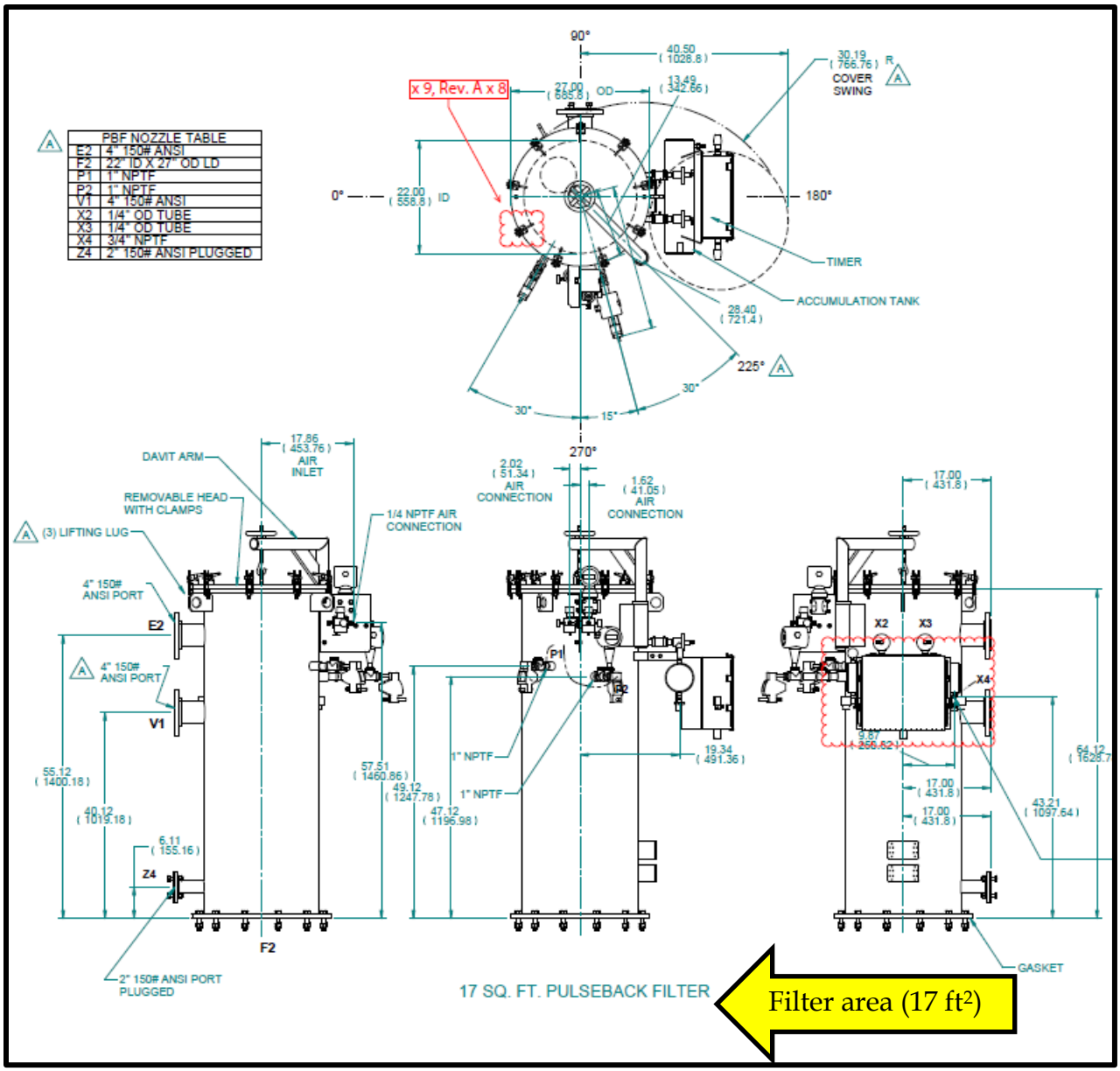

PUBLIC DOCUMENT

MAC Process, Inc.

Cathode-7

Dust Collector DF-7

Filter ID: F61030

PUBLIC DOCUMENT

Filter area (671 ft²), flow rate (1,300 cfm), and design air-to-cloth ratio (1.9:1)

VIEW A–A
FOOT PAD LAYOUT DETAIL

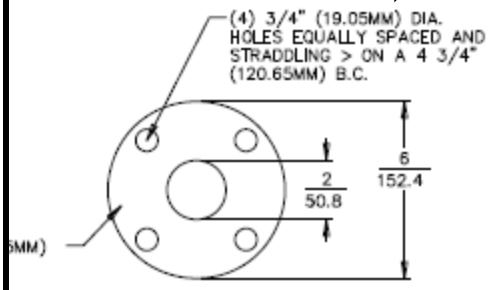

LEVEL INDICATOR PORT FLANGE DETAIL
(4X SCALE)
MATES 2" ANSI 150# FLANGE PATTERN

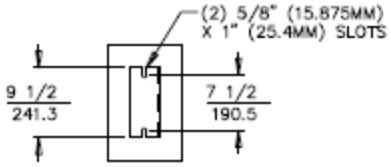

VIBRATOR MOUNT DETAIL
MOUNT FOR BH1 5/8 OR BH2 VIBRATOR
(VIBRATOR NOT PROVIDED)

(16) STAINLESS STEEL TAG INFO.

MANUFACTURE: Mac Process, Inc.
PLANT BUILT: SABETHA, KS
YEAR BUILT: 2011
MODEL: 2M2F8 MAC2FLO FILTER
SERIAL NO.: 167824–003–2
EQUIPMENT TAG NO.: F69040
PURCHASE ORDER NO.: 4557726298
DESIGN PRESSURE: +0.25 PSI (+0.017 BAR)
–35" W.C. (–0.087 BAR)
DESIGN TEMPERATURE: 180^F (82^C)
EMPTY WEIGHT: 2260 LBS.

MANUFACTURE: Mac Process, Inc.
PLANT BUILT: SABETHA, KS
YEAR BUILT: 2011
MODEL: 2M2F2 MAC2FLO FILTER
SERIAL NO.: 167824–005–2
EQUIPMENT TAG NO.: F69045
PURCHASE ORDER NO.: 4557726298
DESIGN PRESSURE: +0.25 PSI (+0.017 BAR)
–35" W.C. (–0.087 BAR)
DESIGN TEMPERATURE: 180^F (82^C)
EMPTY WEIGHT: 610 LBS.

NOTES:
1. ALL DIMENSIONS ARE IN INCHES.
2. PRIMARY FILTER CONSTRUCTED OF 304 STAINLESS STEEL AND SAFETY FILTER CONSTRUCTED OF CARBON STEEL.
3. FILTERS STRESSED FOR –35" W.C. (–0.087BAR).
4. – PRIMARY FILTER WITH (8) QP806 SPUNBOND POLYESTER W/ PTFE MEMBRANE (STAINLESS STEEL END CAPS AND CAGE) CARTRIDGES PROVIDING 671 SQ. FT. OF MEDIA WITH AND AIR TO MEDIA RATIO OF 1.9:1 @ 1300 CFM.
   – SAFETY FILTER WITH (2) PROTURA 254 CARTRIDGES PROVIDING 508 SQ. FT. OF MEDIA WITH AN AIR TO MEDIA RATIO OF 2.6:1 @ 1300 CFM.
5. 1" (25.4MM) NPT CONNECTION FOR COMPRESSED AIR SUPPLY. 80–100 PSI (5.5–6.9 BARG), CLEAN DRY AIR REQUIRED. 1.7 SCF PER PULSE.
6. NEMA 4 TIMER ENCLOSURE WITH 120 VAC SMART TIMER FOR PRIMARY FILTER TO BE MOUNTED ON SUPPORT STRUCTURE, PRE–WIRED AND TESTED. THEN REMOVED FOR SHIPPING. (NO REVERSE AIR PULSE CLEANING ON SAFETY FILTER)
7. NEMA 4 GOYEN SOLENOID ENCLOSURE WTIH 120 VAC SOLENOIDS MOUNTED ON PRIMARY FILTER HEADER AND PRE–PLUMBED TO GOYEN DIAPHRAGM VALVES WITH POLY–FLO TUBING.
8. (2) 1/4" NPT DIFFERENTIAL PRESSURE GAUGE PORTS ON PRIMARY FILTER AND (2) 1/4" NPT DIFFERENTIAL PRESSURE PORTS ON SAFETY FILTER. PORTS MUST BE PLUGGED IF DIFFERENTIAL PRESSURE GAUGE IS NOT USED.
9. 1/4" (6.35MM) WHITE EPDM CLOSED CELL SPONGE GASKET AND (1) SPARE PROVIDED FOR FLANGE CONNECTIONS
10. 12" BUTTERFLY VALVE WITH 316SS DISC & STEM, WHITE EPDM SEAT AND MANUAL ACTUATOR.
11. CARTRIDGES SHIPPED INSTALLED IN FILTERS.
12. FIELD ASSEMBLY REQUIRED.
13. APPROX. WEIGHT: 2260 LBS. (PRIMARY FILTER)
    610 LBS. (SAFETY FILTER)
    600 LBS. (PRIMARY FILTER STRUCTURE)
    3470 LBS. (TOTAL)
14. S/N: 167824–003–2 (PRIMARY FILTER)
    167824–005–2 (SAFETY FILTER)
    167824–008–2 (FAN)
15. TAG: F69040 (PRIMARY FILTER)
    F69045 (SAFETY FILTER)
    BL69050 (FAN)
16. STAINLESS STEEL TAG REQUIRED.

FINISH NOTES:
17. INTERNAL PRODUCT CONTACT WELDS ON PRIMARY FILTER TO CONTINUOUS, GROUND SMOOTH, TO CG24 GRIT FINISH.
18. CARBON STEEL SURFACES TO BE SANDBLASTED TO SSPC–SP–10.
19. PAINT: (CARBON STEEL SURFACES ONLY)
    – PRIMER: ZINC CLAD II (B69V3 & B69D11)
    – INTERMEDIATE COAT: MACROPOXY 646 (B58–600 & B58V600)
    – TOP COAT: COROTHANE II (B65–200 & B60V2)
    (COLOR: RAL–5015 (SKY BLUE))
20. INTERNAL AND EXTERNAL STAINLESS STEEL SURFACES TO BE PICKLED.
(D) 21. EXTERNAL REINFORCEMENT RIBS TO BE SKIP WELDED TO HOUSINGS. (CARBON STEEL RIBS TO HAVE CLEAR SILICONE CAULKING BETWEEN SKIP WELDS AFTER PAINTING, STAINLESS STEEL RIBS TO HAVE CLEAR SILICONE CAULKING BETWEEN SKIP WELDS AFTER PICKLING)

SPECIAL ASSEMBLY AND TEST NOTES:
22. FILTERS TO BE BUBBLE TESTED AT 1/4 PSI (0.017 BARG)

This print is certified to be dimensionally correct to Ê 1/4 inch on all components, Ê 1/2 on overall dimensions up to 120 inches and Ê 1 1/2 on all dimensions greater than 120.
Mac Process, Inc.
BY Michael L Herbster DATE 4/13/11

macprocess
solvent process group

THIS MATERIAL IS THE PROPERTY OF MAC PROCESS INC. AND SHOULD NOT BE REPRODUCED/PUBLISHED OR DISCLOSED TO OTHERS WITHOUT AUTHORIZATION AND SHALL NOT BE USED IN ANY WAY AGAINST OR DETRIMENTAL TO MAC PROCESS INC., SABETHA, KANSAS.

2M2F8 MAC2FLO WITH 2M2F2 SAFETY FILTER FOR BASF CORPORATION (ELYRIA, OH)

DRAWN BY	DATE	JOB NO.	DRAWING NO.	REV.
MLH	04/13/11	167824	DM107269	D
SCALE 1/16"=1"				

DM107269

PUBLIC DOCUMENT

New York Blower Company

Cathodes-4, -6, and -7

Dust Collectors DF-4, DF-6, and DF-7

Blower ID: 61040

nyb The New York Blower Company

Fan # 1 From File F07882

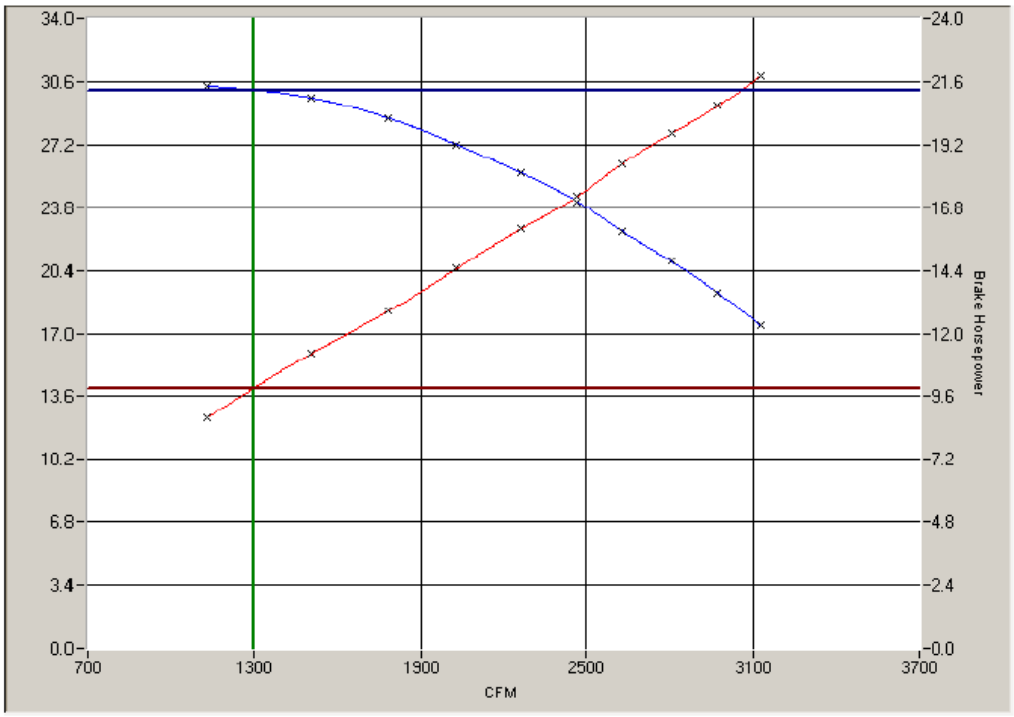

POO Values:	
CFM	1300
SP	30.15
BHP	9.91
ME %	62.2
RPM	3264
Density	0.0592

Test Data

Plot		Test Parameters					Corrected To:						
No.	S.	Test No.	Part No.	Wheel Dia.	Outlet Area	Bar. Pres.	RPM	Density	Comp.	Wheel Width %	Wheel Dia.	Brg. Drag	Description
1	X	PB11-8	2	24.000	0.349	29.23	3264	0.0592	Yes	100.00	24.00	0.000	

PUBLIC DOCUMENT

MAC Process, Inc.

Cathode- 9

Dust DF-12

Filter ID: F70025

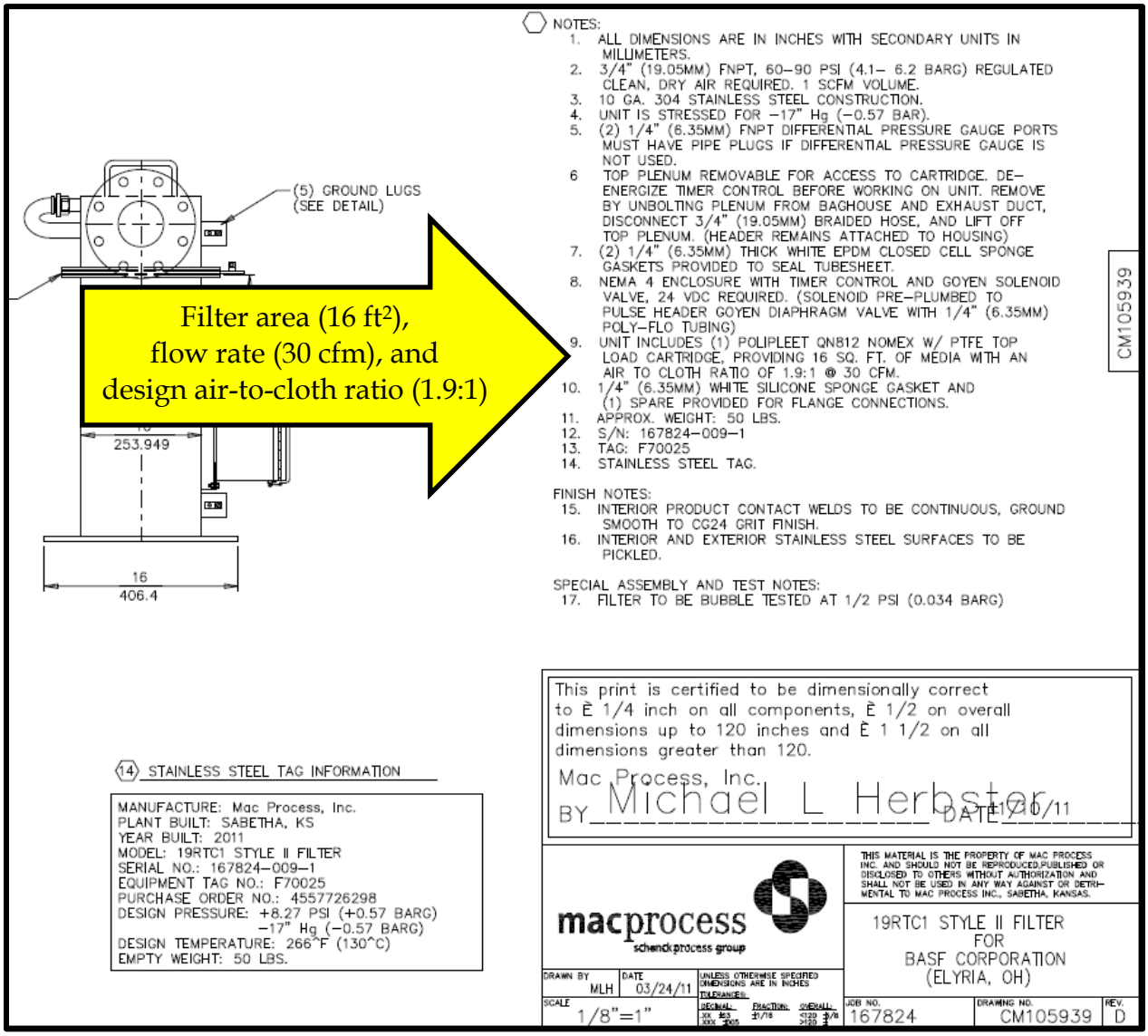

PUBLIC DOCUMENT

MAC Process, Inc.

Cathode- 9 and Cathode -13

Dust Collector DF-8

Filter ID: F69040

Blower ID: 69050

PUBLIC DOCUMENT

Filter area (671 ft²), flow rate (1,300 cfm), and design air-to-cloth ratio (1.9:1)

VIEW A–A
FOOT PAD LAYOUT DETAIL

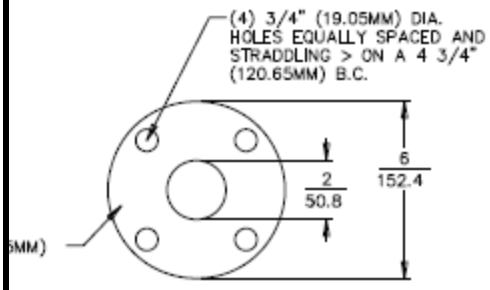

LEVEL INDICATOR PORT FLANGE DETAIL
(4X SCALE)
MATES 2" ANSI 150# FLANGE PATTERN

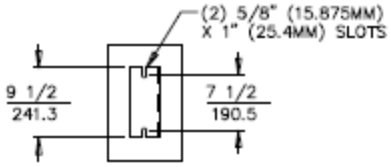

VIBRATOR MOUNT DETAIL
MOUNT FOR BH1 5/8 OR BH2 VIBRATOR
(VIBRATOR NOT PROVIDED)

(16) STAINLESS STEEL TAG INFO.

MANUFACTURE: Mac Process, Inc.
PLANT BUILT: SABETHA, KS
YEAR BUILT: 2011
MODEL: 2M2F8 MAC2FLO FILTER
SERIAL NO.: 167824–003–2
EQUIPMENT TAG NO.: F69040
PURCHASE ORDER NO.: 4557726298
DESIGN PRESSURE: +0.25 PSI (+0.017 BAR)
–35" W.C. (–0.087 BAR)
DESIGN TEMPERATURE: 180^F (82^C)
EMPTY WEIGHT: 2260 LBS.

MANUFACTURE: Mac Process, Inc.
PLANT BUILT: SABETHA, KS
YEAR BUILT: 2011
MODEL: 2M2F2 MAC2FLO FILTER
SERIAL NO.: 167824–005–2
EQUIPMENT TAG NO.: F69045
PURCHASE ORDER NO.: 4557726298
DESIGN PRESSURE: +0.25 PSI (+0.017 BAR)
–35" W.C. (–0.087 BAR)
DESIGN TEMPERATURE: 180^F (82^C)
EMPTY WEIGHT: 610 LBS.

NOTES:
1. ALL DIMENSIONS ARE IN INCHES.
2. PRIMARY FILTER CONSTRUCTED OF 304 STAINLESS STEEL AND SAFETY FILTER CONSTRUCTED OF CARBON STEEL.
3. FILTERS STRESSED FOR –35" W.C. (–0.087BAR).
4. – PRIMARY FILTER WITH (8) QP806 SPUNBOND POLYESTER W/ PTFE MEMBRANE (STAINLESS STEEL END CAPS AND CAGE) CARTRIDGES PROVIDING 671 SQ. FT. OF MEDIA WITH AND AIR TO MEDIA RATIO OF 1.9:1 @ 1300 CFM.
– SAFETY FILTER WITH (2) PROTURA 254 CARTRIDGES PROVIDING 508 SQ. FT. OF MEDIA WITH AN AIR TO MEDIA RATIO OF 2.6:1 @ 1300 CFM.
5. 1" (25.4MM) NPT CONNECTION FOR COMPRESSED AIR SUPPLY. 80–100 PSI (5.5–6.9 BARG), CLEAN DRY AIR REQUIRED. 1.7 SCF PER PULSE.
6. NEMA 4 TIMER ENCLOSURE WITH 120 VAC SMART TIMER FOR PRIMARY FILTER TO BE MOUNTED ON SUPPORT STRUCTURE, PRE–WIRED AND TESTED. THEN REMOVED FOR SHIPPING. (NO REVERSE AIR PULSE CLEANING ON SAFETY FILTER)
7. NEMA 4 GOYEN SOLENOID ENCLOSURE WTIH 120 VAC SOLENOIDS MOUNTED ON PRIMARY FILTER HEADER AND PRE–PLUMBED TO GOYEN DIAPHRAGM VALVES WITH POLY–FLO TUBING.
8. (2) 1/4" NPT DIFFERENTIAL PRESSURE GAUGE PORTS ON PRIMARY FILTER AND (2) 1/4" NPT DIFFERENTIAL PRESSURE PORTS ON SAFETY FILTER. PORTS MUST BE PLUGGED IF DIFFERENTIAL PRESSURE GAUGE IS NOT USED.
9. 1/4" (6.35MM) WHITE EPDM CLOSED CELL SPONGE GASKET AND (1) SPARE PROVIDED FOR FLANGE CONNECTIONS
10. 12" BUTTERFLY VALVE WITH 316SS DISC & STEM, WHITE EPDM SEAT AND MANUAL ACTUATOR.
11. CARTRIDGES SHIPPED INSTALLED IN FILTERS.
12. FIELD ASSEMBLY REQUIRED.
13. APPROX. WEIGHT: 2260 LBS. (PRIMARY FILTER)
610 LBS. (SAFETY FILTER)
600 LBS. (PRIMARY FILTER STRUCTURE)
3470 LBS. (TOTAL)
14. S/N: 167824–003–2 (PRIMARY FILTER)
167824–005–2 (SAFETY FILTER)
167824–008–2 (FAN)
15. TAG: F69040 (PRIMARY FILTER)
F69045 (SAFETY FILTER)
BL69050 (FAN)
16. STAINLESS STEEL TAG REQUIRED.

FINISH NOTES:
17. INTERNAL PRODUCT CONTACT WELDS ON PRIMARY FILTER TO CONTINUOUS, GROUND SMOOTH, TO CG24 GRIT FINISH.
18. CARBON STEEL SURFACES TO BE SANDBLASTED TO SSPC–SP–10.
19. PAINT: (CARBON STEEL SURFACES ONLY)
– PRIMER: ZINC CLAD II (B69V3 & B69D11)
– INTERMEDIATE COAT: MACROPOXY 646 (B58–600 & B58V600)
– TOP COAT: COROTHANE II (B65–200 & B60V2)
(COLOR: RAL–5015 (SKY BLUE))
20. INTERNAL AND EXTERNAL STAINLESS STEEL SURFACES TO BE PICKLED.
(D) 21. EXTERNAL REINFORCEMENT RIBS TO BE SKIP WELDED TO HOUSINGS. (CARBON STEEL RIBS TO HAVE CLEAR SILICONE CAULKING BETWEEN SKIP WELDS AFTER PAINTING, STAINLESS STEEL RIBS TO HAVE CLEAR SILICONE CAULKING BETWEEN SKIP WELDS AFTER PICKLING)

SPECIAL ASSEMBLY AND TEST NOTES:
22. FILTERS TO BE BUBBLE TESTED AT 1/4 PSI (0.017 BARG)

This print is certified to be dimensionally correct to Ê 1/4 inch on all components, Ê 1/2 on overall dimensions up to 120 inches and Ê 1 1/2 on all dimensions greater than 120.
Mac Process, Inc.
BY Michael L Herbster DATE 4/13/11

macprocess
solvent process group

THIS MATERIAL IS THE PROPERTY OF MAC PROCESS INC. AND SHOULD NOT BE REPRODUCED/PUBLISHED OR DISCLOSED TO OTHERS WITHOUT AUTHORIZATION AND SHALL NOT BE USED IN ANY WAY AGAINST OR DETRIMENTAL TO MAC PROCESS INC., SABETHA, KANSAS.

2M2F8 MAC2FLO WITH 2M2F2 SAFETY FILTER FOR BASF CORPORATION (ELYRIA, OH)

DRAWN BY	DATE	JOB NO.	DRAWING NO.	REV.
MLH	04/13/11	167824	DM107269	D
SCALE 1/16"=1"				

DM107269

PUBLIC DOCUMENT

New York Blower Company

Blower ID: 69050

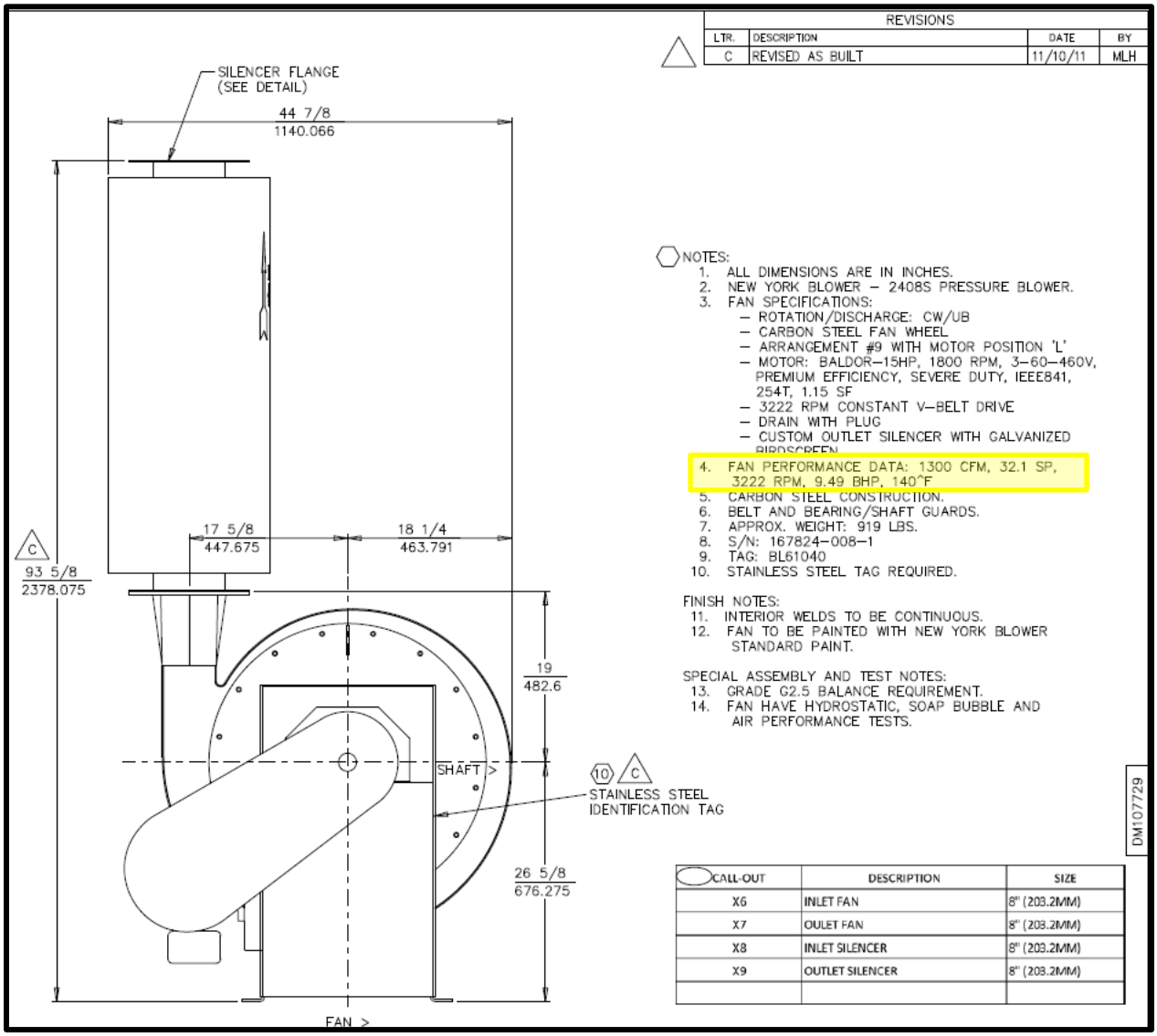

PUBLIC DOCUMENT

MAC Process, Inc.

Cathode-11 and Cathode -12

Dust Collectors DF-10

Filter ID: F92010

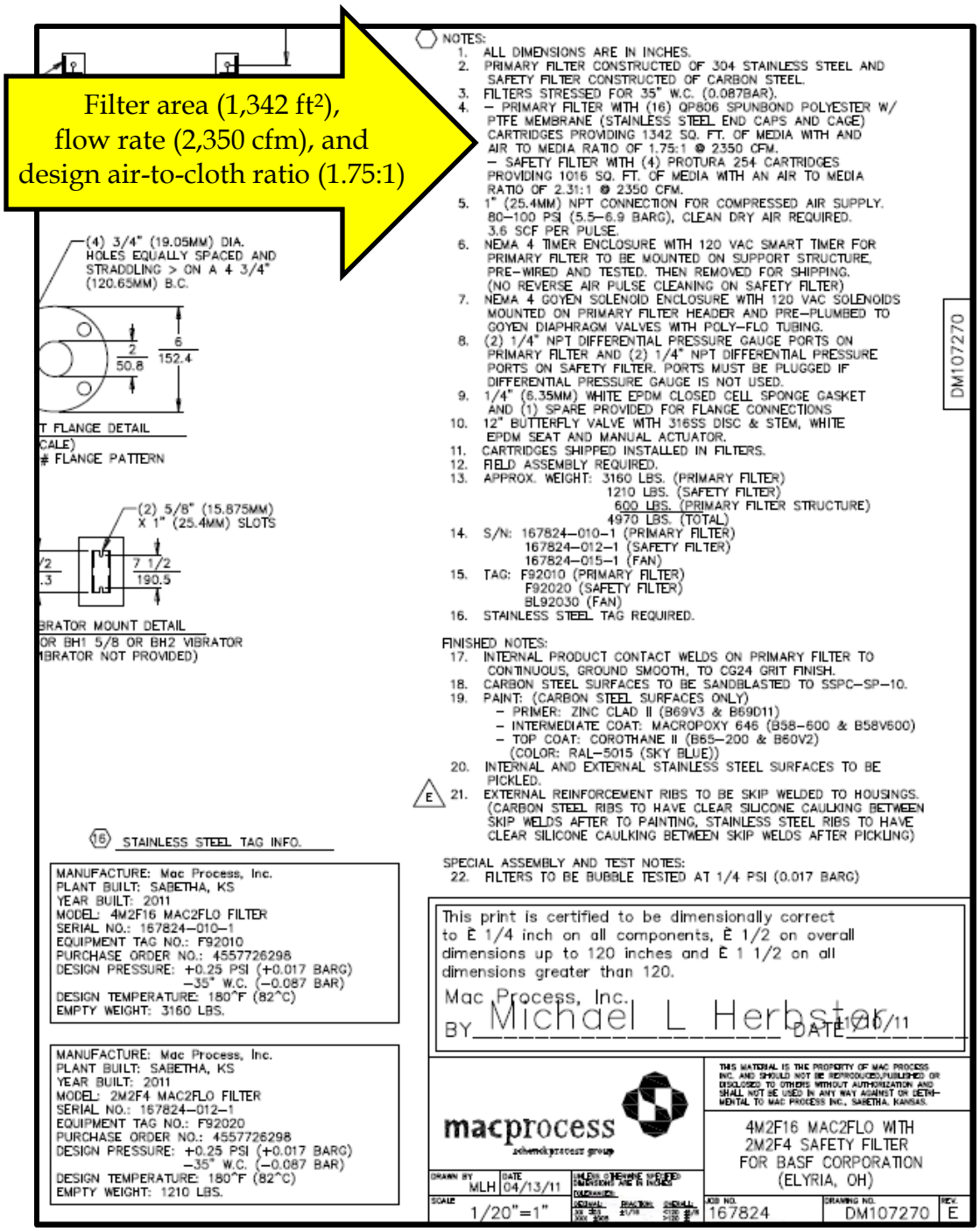

Vac-U-Max

Cathode-13

Dust Collectors DF-11

Filter ID: F67350

Blower ID: 67355

VAC-U-MAX

69 William Street, Belleville, NJ 07109 (973) 759-4600 Fax (973) 759-6449 E-Mail: info@vac-u-max.com

VAC-U-MAX QUALITY ASSURANCE INSPECTION CHECK LIST
CENTRAL VACUUM SYSTEMS

VAC-U-MAX Job #:	*4240923*
Customer:	BASF Corporation
Destination:	Elyria, Ohio
Purchase Order / Contract #:	4900110205
Equipment:	FSU 30 BIBO, VPU 5.0Hp
VAC-U-MAX Catalog #s:	Z71655/02A, 71655/01
BASF System Part #:	Filter Sagger Cleaning F67350 *(VAC-U-MAX SYSTEM "A")* Sub Assembly Part #s: BL67355, D67351, F67353
Assembled By:	Alan Zecca, Sr., Rubin Quijano: Mechanical Ed Orlando, Mike Diaz: Electrical
Engineering:	Jonathan Saenz: Mechanical Will Reigert: Electrical
Inspected By:	Thomas Schneider, VAC-U-MAX Otis Wilson, WORLEY PARSONS

Above referenced equipment has passed VAC-U-MAX, and Worley Parsons quality assurance and inspection and is approved for shipment. All pages of this report have been reviewed and accepted.

VAC-U-MAX

Thomas Schneider: Thomas Schneider

Date: 1/19/2012.

WORLEY PARSONS

Otis Wilson: Otis Wilson

WORLEY PARSONS 35

Date: _19-Jan-2012_____

PUBLIC DOCUMENT

INSPECTION CHECKLIST

GENERAL FUNCTION *(check as appropriate)* ☒ ACCEPTED ☐ REJECTED	THE SYSTEM FUNCTIONS AS SPECIFIED: ☒ ON/OFF CIRCUITS ☒ SOLENOIDS ☒ PLC PROGRAMS AND TIMERS ☒ FILTER CLEANING ☒ DISCHARGE VALVES ☒ LEVEL PROBES ☒ DIAGNOSTIC INDICATORS *(vacuum gauges, delta-P gauges, etc.)* ☒ VACUUM RELIEF VALVES ☐ WARNING DEVICES AND INDICATORS *(audible alarms, stack or strobe lights, etc)* ☐ OTHER:	
CONSTRUCTION ☒ ACCEPTED ☐ REJECTED	MATERIAL:	☒ CARBON/STAINLES 304 AND 316
	FINISH:	☒ WHITE POWDER COAT/BEAD BLAST
	WELDS	☒ GENERAL PURPOSE CONSTRUCTION
RECEIVER / FILTER SEPARATORS ☒ ACCEPTED ☐ REJECTED	TYPE:	☒ FREE STANDING BIBO
	RECEIVER SIZE:	☒ 30" DIAMETER CONCENTRIC CONE
	INLET SIZE / TYPE:	☒ 2.5" ANSI #150
	OUTLET SIZE / TYPE:	☒ 2.5" TUBE
	DISCHARGE VALVE:	☒ DOUBLE WAFER VALVE
	COLLECTION CONTAINER:	☒ CONTINUOUS BAGGING
	FILTER TYPE:	☒ CARTRIDGE
	FILTER MEDIA:	☒ POLYESTER WITH EPTFE MEMBRANE
	FILTER CLEANING:	☒ CONTINUOUS PULSE
POWER PACKAGE ☒ ACCEPTED ☐ REJECTED	TYPE:	☒ ROTARY LOBE POSITIVE DISPLACEMENT PUMP
	BLOWER MODEL:	☒ ROOTS URAI 33
	MOTOR:	☒ IEEE841 RATED TEFC
	MOTOR MFG'R:	☒ RELIANCE/BALDOR ELECTRIC
	HORSEPOWER:	☒ 5.0 HP 230/460 VOLTS
	VACUUM RELIEF VALVE:	☒ BREAKS AT 12" Hg
	INLET SIZE / TYPE:	☒ 2.5" TUBE
	SECONDARY FILTER:	☒ HEPA CARTRIDGE
	SOUND ENCLOSURE:	☒ YES
	EXHAUST SILENCER:	☒ DUAL EXHAUST SILENCER

PUBLIC DOCUMENT

Company: ROOTS Division
Address: 16240 Port Northwest Drive, Houston, Texas 77041
Ph: 832-590-2305/1-877-393-7668 Fax: 832-590-2326

ROOTS BLOWER PERFORMANCE REPORT : Program Version 6.13 Release Date 2/10/2010
Program Mode: SELECTION Run Date: 11/28/2011

AMBIENT CONDITIONS:

Gas	AIR	
Relative Humidity	36%	
Molecular Weight	28.863	
k-Value	1.396	
Specific Gravity	.996	
Ambient Temperature	68	deg F
Ambient Pressure	14.33	PSIA
Elevation	700	feet

STANDARD CONDITIONS:

Pressure	14.7	PSIA
Temperature	68	deg F
Relative Humidity	36	%

SELECTED UNIT DETAIL: Model 33 URAI

	Design	Des/Max
Speed, RPM	2492	69.2%
System Inlet Volume, ICFM	128	
Actual Blower Inlet Volume, ICFM	128	+/-5 %
Standard Volume, SCFM	108	
Mass/Weight Flow, #/min	8.07	+/-5 %
System Inlet Temperature, deg F	68.0	
System Inlet Pressure, in Hg Vac	4.000	
Inlet Pressure Loss, PSI	0.000	
Blower Inlet Pressure, in Hg Vac	4.000	
Blower Discharge Pressure, PSIA	14.330	
Discharge Press. Loss, PSI	0.000	
System Discharge Pressure, PSIA	14.330	
Blower Diff. Press., PSI	1.956	16.3%
Power, BHP	1.57	+/-%
Temperature Rise, deg F	28.9	12.9%
Discharge Temperature, deg F	96.9	
System Discharge Volume, ACFM	116	
Relief Valve Setting, in Hg Vac	12.0	77.4%
Power @ RV Setting, BHP	4.19	
Temp. Rise @ Relief Setting, deg F	140.7	62.5%
Disch. Temp @ Relief Setting, deg F	208.7	
V-Belt: Est. B10 Brg Life, hours	>99999999	
Coupling: Est. B10 Brg Life, hours	>99999999	
Est. Free Field Noise, dBa	77.7	

Measured as sound press. level per ISO 2151:2004E with +/-3 dBA tol.

PUBLIC DOCUMENT

Filter Sagger System F67350

VAC-U-MAX PART NO.	BASF PART NO.	QTY.	DESCRIPTION	PRICE
40125EPTFE		2	FLTR CRT 12DX26LG EPTFE	$ 495.00 EA.

Mike Rectanus

From: Steve Wagoner <stevewagoner@vac-u-max.net>
Sent: Tuesday, April 08, 2014 10:16 AM
To: Mike Rectanus
Cc: Tony Branco
Subject: VAC-U-MAX filter area

4/8/14
Hi Mike,
Per our conversation this morning, I am confirming the filter area of our filter #40125EPPFE to be 47.5 sq ft.
The material is an expanded PTFE.
Please feel free to contact us at anytime if you have further questions.

Steve Wagoner
Mechanical designer
VAC-U-MAX

This message is for the named person's use only.
It may contain confidential, proprietary or legally privileged information. No confidentiality or privilege is waived or lost by any transmission errors. If you receive this message in error, please immediately delete it and all copies of it from your system, destroy any hard copies of it and notify the sender. You must not, directly or indirectly, use, disclose, distribute, print, or copy any part of this message if you are not the intended recipient. VAC-U-MAX and each of its subsidiaries each reserve the right to intercept and monitor all e-mail communications through its networks if legally allowed.
Message transmission is not guaranteed to be secure.

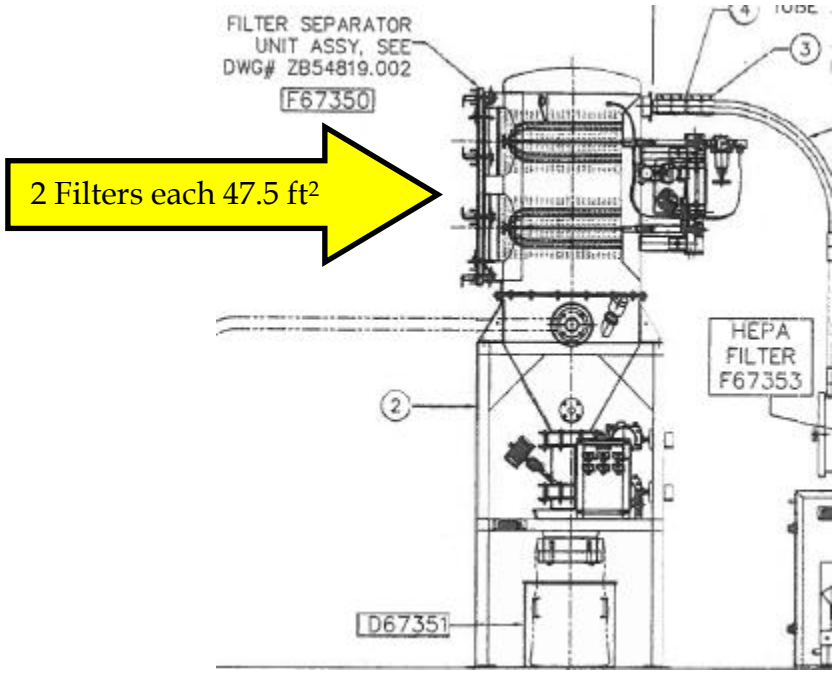

PUBLIC DOCUMENT

Netzsch

Cathode-10

Dust Collectors DF-9

Filter ID: F71030

Blower ID: 71050

PUBLIC DOCUMENT

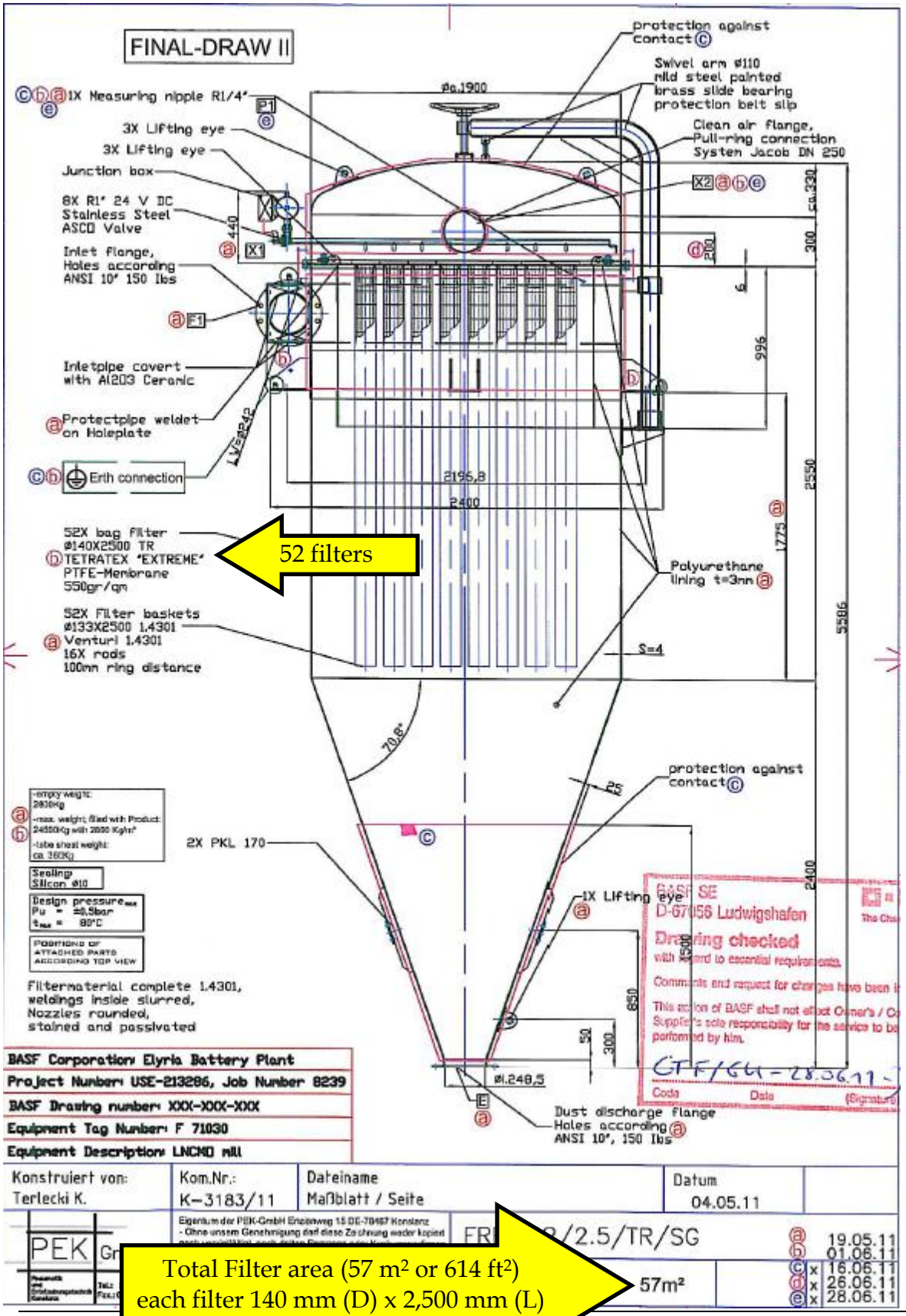

PUBLIC DOCUMENT

Performance Curve

Date:	25-Okt-11	File:	F11357-100	SB2
Performance		Cust. No.:	137964	
Options:		Customer:	NETZSCH-CONDUC MAHLTECHNIK Rodenbacher Chasssee 1	
		Product Line:	Type HP Pressure Blower	
		Size:	32010	
		Capacity:	Standard	
		CFM:	2.213	
		SP:	84,3	
		RPM:	3536	
Temperature:	*70*	BHP:	49,2	
Altitude:	*N/A*	Density:	0,075	
		Max Safe Speed:	3600	

Tag: PID TAG NO BL71050 METZSCH-CONDUX MAT NO 737030 0530

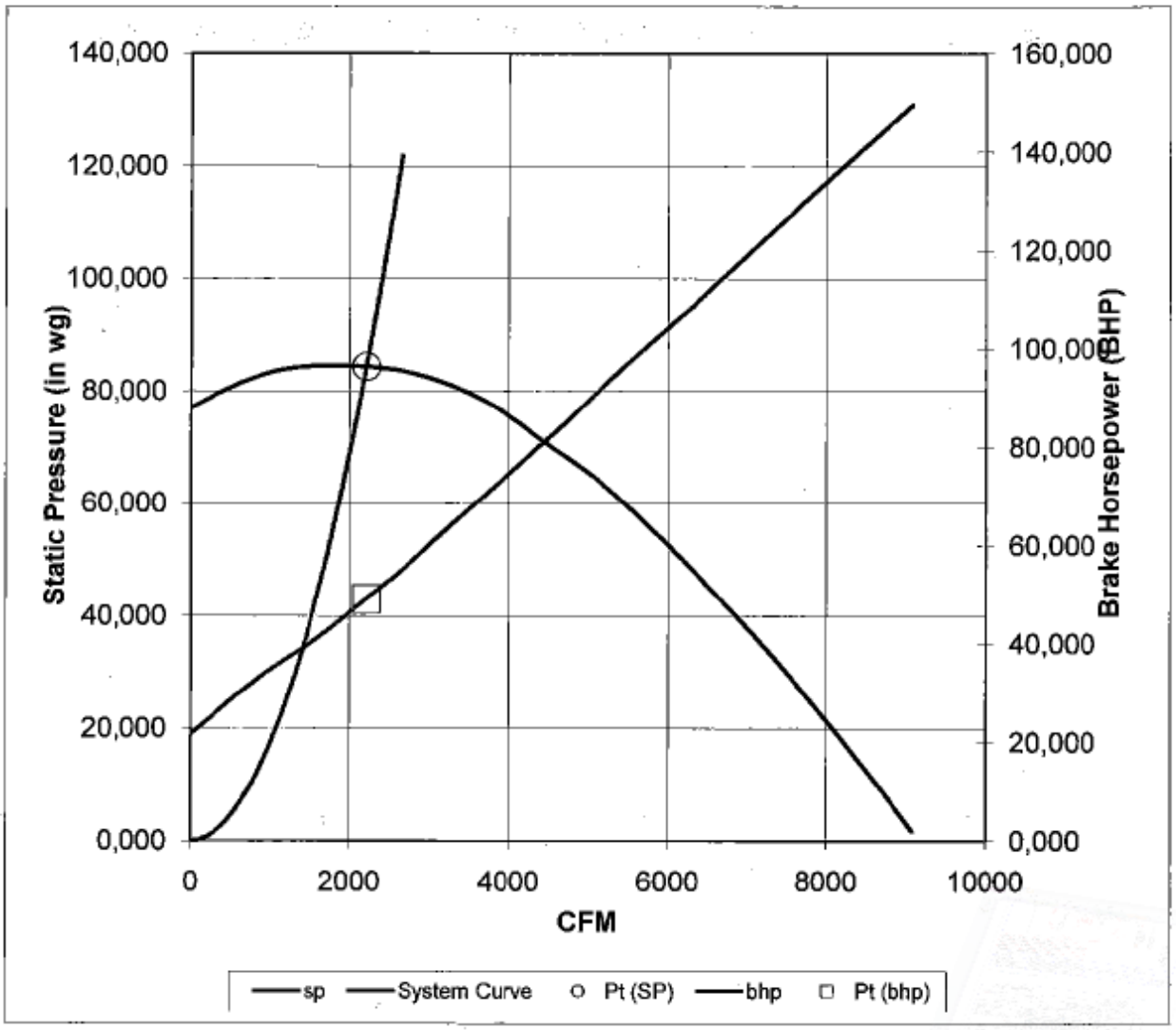

PUBLIC DOCUMENT

Vac-U-Max

Cathode-15

Dust Collectors DF-13

Filter ID: F11910

Blower ID: 11930

VAC-U-MAX

69 William Street, Belleville, NJ 07109 (973) 759-4600 Fax (973) 759-6449 E-Mail: info@vac-u-max.com

VAC-U-MAX QUALITY ASSURANCE INSPECTION CHECK LIST
CENTRAL VACUUM SYSTEMS

VAC-U-MAX Job #:	*4240923*
Customer:	BASF Corporation
Destination:	Elyria, Ohio
Purchase Order / Contract #:	4900110205
Equipment:	FSU 30 BIBO, VPU 7.5Hp
VAC-U-MAX Catalog #s:	Z71655/02B, 71655/04
BASF System Part #:	Filter Central Vacuum Unit F11910 *(VAC-U-MAX SYSTEM "B")* Sub Assembly Part #s: BL11930, D11910, F11920
Assembled By:	Alan Zecca, Sr., Rubin Quijano: Mechanical Ed Orlando, Mike Diaz: Electrical
Engineering:	Jonathan Saenz: Mechanical Will Reigert: Electrical
Inspected By:	Thomas Schneider, VAC-U-MAX Otis Wilson, WORLEY PARSONS

Above referenced equipment has passed VAC-U-MAX, and Worley Parsons quality assurance and inspection and is approved for shipment. All pages of this report have been reviewed and accepted.

VAC-U-MAX		*WORLEY PARSONS*	
Thomas Schneider:	Thomas Schneider	Otis Wilson:	Otis Wilson
Date:	1/19/2012	Date:	19-JAN-2012

WORLEY PARSONS 35

PUBLIC DOCUMENT

INSPECTION CHECKLIST

GENERAL FUNCTION *(check as appropriate)* ☒ ACCEPTED ☐ REJECTED	THE SYSTEM FUNCTIONS AS SPECIFIED: ☒ON/OFF CIRCUITS ☒SOLENOIDS ☒PLC PROGRAMS AND TIMERS ☒FILTER CLEANING ☒DISCHARGE VALVES ☒LEVEL PROBES ☒DIAGNOSTIC INDICATORS *(vacuum gauges, delta-P gauges, etc.)* ☒ VACUUM RELIEF VALVES ☐WARNING DEVICES AND INDICATORS *(audible alarms, stack or strobe lights, etc)* ☐ OTHER:	
CONSTRUCTION ☒ ACCEPTED ☐ REJECTED	MATERIAL:	☒ CARBON/STAINLESS 304 AND 316
	FINISH:	☒ WHITE POWDER COAT/BEAD BLAST
	WELDS	☒ GENERAL PURPOSE CONSTRUCTION
RECEIVER / FILTER SEPARATORS ☒ ACCEPTED ☐ REJECTED	TYPE:	☒ FREE STANDING BIBO
	RECEIVER SIZE:	☒ 30" DIAMETER CONCENTRIC CONE
	INLET SIZE / TYPE:	☒ 2.5" ANSI #150
	OUTLET SIZE / TYPE:	☒ 2.5" TUBE
	DISCHARGE VALVE:	☒ DOUBLE WAFER VALVE
	COLLECTION CONTAINER:	☒ CONTINUOUS BAGGING
	FILTER TYPE:	☒ CARTRIDGE
	FILTER MEDIA:	☒ POLYESTER WITH EPTFE MEMBRANE
	FILTER CLEANING:	☒ CONTINUOUS PULSE
POWER PACKAGE ☒ ACCEPTED ☐ REJECTED	TYPE:	☒ ROTARY LOBE POSITIVE DISPLACEMENT PUMP
	BLOWER MODEL:	☒ ROOTS URAI 45
	MOTOR:	☒ IEEE841 RATED TEFC
	MOTOR MFG'R:	☒ RELIANCE/BALDOR ELECTRIC
	HORSEPOWER:	☒ 7.5 HP 230/460 VOLTS
	VACUUM RELIEF VALVE:	☒ BREAKS AT 12" Hg
	INLET SIZE / TYPE:	☒ 2.5" TUBE
	SECONDARY FILTER:	☒ HEPA CARTRIDGE
	SOUND ENCLOSURE:	☒ YES
	EXHAUST SILENCER:	☒ DUAL EXHAUST SILENCER

PUBLIC DOCUMENT

Company: ROOTS Division
Address: 16240 Port Northwest Drive, Houston, Texas 77041
Ph: 832-590-2305/1-877-393-7668 Fax: 832-590-2326

ROOTS BLOWER PERFORMANCE REPORT : Program Version 6.13 Release Date 2/10/2010
Program Mode: SELECTION Run Date: 11/28/2011

AMBIENT CONDITIONS:

Gas	AIR	
Relative Humidity	36%	
Molecular Weight	28.863	
k-Value	1.396	
Specific Gravity	.996	
Ambient Temperature	68	deg F
Ambient Pressure	14.33	PSIA
Elevation	700	feet

STANDARD CONDITIONS:

Pressure	14.7	PSIA
Temperature	68	deg F
Relative Humidity	36	%

SELECTED UNIT DETAIL: Model 45 URAI

	Design	Des/Max
Speed, RPM	2215	61.5%
System Inlet Volume, ICFM	229	
Actual Blower Inlet Volume, ICFM	229	+/-5 %
Standard Volume, SCFM	193	
Mass/Weight Flow, #/min	14.44	+/-5 %
System Inlet Temperature, deg F	68.0	
System Inlet Pressure, in Hg Vac	4.000	
Inlet Pressure Loss, PSI	0.000	
Blower Inlet Pressure, in Hg Vac	4.000	
Blower Discharge Pressure, PSIA	14.330	
Discharge Press. Loss, PSI	0.000	
System Discharge Pressure, PSIA	14.330	
Blower Diff. Press., PSI	1.956	19.6%
Power, BHP	2.64	+/-%
Temperature Rise, deg F	28.7	12.8%
Discharge Temperature, deg F	96.7	
System Discharge Volume, ACFM	208	
Relief Valve Setting, in Hg Vac	12.0	72.7%
Power @ RV Setting, BHP	7.21	
Temp. Rise @ Relief Setting, deg F	138.7	61.6%
Disch. Temp @ Relief Setting, deg F	206.7	
V-Belt: Est. B10 Brg Life, hours	>99999999	
Coupling: Est. B10 Brg Life, hours	>99999999	
Est. Free Field Noise, dBa	77.9	

Measured as sound press. level per ISO 2151:2004E with +/-3 dBA tol.

PUBLIC DOCUMENT

Filter Central Vacuum Unit F11910

VAC-U-MAX PART NO.	BASF PART NO.	QTY.	DESCRIPTION	PRICE
40125EPTFE		2	FLTR CRT 12DX26LG EPTFE	$ 495.00 EA

Mike Rectanus

From: Steve Wagoner <stevewagoner@vac-u-max.net>
Sent: Tuesday, April 08, 2014 10:16 AM
To: Mike Rectanus
Cc: Tony Branco
Subject: VAC-U-MAX filter area

4/8/14
Hi Mike,
Per our conversation this morning, I am confirming the filter area of our filter #40125EPPFE to be 47.5 sq ft.
The material is an expanded PTFE.
Please feel free to contact us at anytime if you have further questions.

Steve Wagoner
Mechanical designer
VAC-U-MAX

This message is for the named person's use only.
It may contain confidential, proprietary or legally privileged information. No confidentiality or privilege is waived or lost by any transmission errors. If you receive this message in error, please immediately delete it and all copies of it from your system, destroy any hard copies of it and notify the sender. You must not, directly or indirectly, use, disclose, distribute, print, or copy any part of this message if you are not the intended recipient. VAC-U-MAX and each of its subsidiaries each reserve the right to intercept and monitor all e-mail communications through its networks if legally allowed.
Message transmission is not guaranteed to be secure.

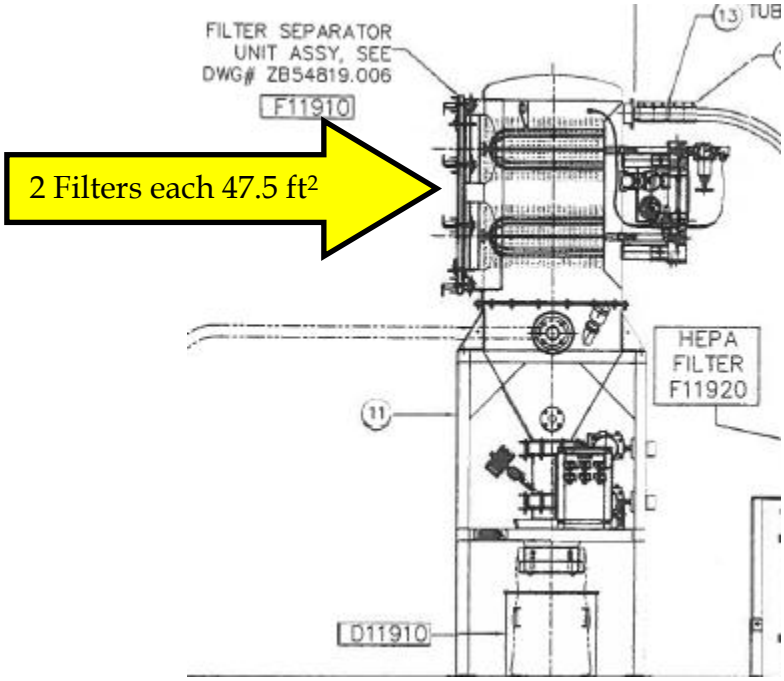

PUBLIC DOCUMENT

ERM has over 140 offices across the following countries and territories worldwide

Argentina
Australia
Belgium
Brazil
Canada
China
Colombia
France
Germany
Hong Kong
Hungary
India
Indonesia
Ireland
Italy
Japan
Kazakhstan
Malaysia
Mexico
The Netherlands
New Zealand
Panama
Peru
Poland
Portugal
Puerto Rico
Romania
Russia
Singapore
South Africa
South Korea
Spain
Sweden
Taiwan
Thailand
United Arab Emirates
UK
US
Vietnam

ERM's Cincinnati Office

9825 Kenwood Road
Suite 100
Cincinnati, Ohio 45242
T: 513 830 9030
F: 513 830 9031

www.erm.com