Ohio EPA
Statewide Anti-Tampering Program Manual

Fall 2013

MSS - 1(800) 573-5999

TABLE OF CONTENTS

I Introduction

II Complaint Handling and Complaint Follow-Up

III Repair/Muffler Shop Inspections

IV Commercial and Government Fleet Inspections

V Vehicle Dealership Inspections

VI Procedures to Follow when Denied Inspection

VII Vehicle Tampering Inspection Procedures

VIII Supplemental Information

1. Synopsis of OAC rules 3745-80-01 through 3745-80-03
2. US EPA's Exhaust Repair Guidelines
3. US EPA's Memorandum No. 1A and Addendum
4. US EPA's Engine Switching Fact Sheet
5. US EPA's Kit Car Policy

IX Appendices

1. Ohio EPA Complaint Report
2. Ohio EPA Vehicle Inspection Form
3. Statement Form
4. Aftermarket Converter Checklist
5. Muffler/Repair Shop Invoice Information
6. On-Site Inspection Report
7. Tampering Report
8. Investigation Follow-Up Form
9. General Contact Report
10. ORC 3704.16 and 4501.1
11. Clean Air Act Materials
12. Auto Dealer Audit Findings Form
13. Anti-Tampering Fact Sheets
14. Sample Warning Letter
15. Sample Notice of Violation Letter

Section I

Introduction

Section I Introduction

The purpose of Ohio EPA's statewide anti-tampering program is to investigate federal and enforce state laws concerning vehicle tampering. Investigations may involve responding to consumer complaints concerning tampered vehicles, or illegal repairs performed by repair facilities, as well as performing unannounced inspections of government and commercial fleets, muffler shops, repair shops and new and used vehicle dealerships. These investigations allow Ohio EPA to inspect pursuant to the Clean Air Act, Section 203 or violations of Ohio Revised Code (ORC) sections 3704.16, 3704.161, and 3704.162 and to initiate proper enforcement action when necessary.

Complaints are usually received by the Central Office anti-tampering coordinator and then forwarded to the appropriate district office or local air agency for investigation. If you do take a complaint, please forward a copy to the Central Office anti-tampering coordinator before doing anything else with it. Unannounced inspections of fleets, repair facilities and vehicle dealers are normally organized and carried out by district office or local air agency personnel who have received Federal Authorization training from U.S. EPA or tampering training from Ohio EPA. Each local air agency and district office has agreed to perform a set number of anti-tampering investigations during each quarter of their contract or work agreement.

The purpose of this manual is to provide the local air agencies and district offices with procedures for each type of investigation along with the appropriate documents and forms to be completed in order to ensure effective enforcement. This manual also provides instructions on how to perform a complete anti-tampering inspection of a vehicle's emission control equipment as well as general information on tampering, aftermarket converters, engine switching, and exhaust system repairs.

The Clean Air Act (Section 203 (a)) gives U.S. EPA the authority to enforce tampering violations. Employees of Ohio EPA and Ohio's local air agencies, that are Authorized Representatives of U.S. EPA, have the authority to investigate fleets and repair facilities for federal investigations. Authorized Inspectors also have access to these facilities (including all maintenance records and receipts pertaining to the investigation) during normal hours of operation. Prohibited acts stated in Section 203 of the Clean Air Act are as follows:

1. Removing or rendering inoperative any emission control device, which was installed on the vehicle when it was manufactured, prior to its sale and delivery to the ultimate purchaser;

2. Knowingly removing or rendering inoperative any emission control device after sale and delivery of the vehicle to the ultimate purchaser (this includes repair personnel and vehicle dealers as well as individuals performing repairs on their own vehicles); and

3. Manufacturing, selling, offering to sell, or installing any part intended for use on a motor vehicle where a principal effect of the part is to bypass, defeat or render

inoperative any emission control device or element of design that was installed on the vehicle when it was manufactured (this includes test pipes, fuel additives containing lead, "high performance" computer chips, etc.).

Revised Code Section 3704 gives Ohio authorized representatives the authority to investigate fleets and repair facilities, as well as new and used car dealerships. Authorized inspectors also have access to these facilities (including all maintenance records and receipts pertaining to the investigation) during normal hours of operation.

Revised Code Section 3704.16 prohibits the following actions:

Possessing, selling or advertising any part or component where the primary effect is to bypass, defeat or render inoperative, in whole or in part, the emission control system;

Introducing leaded fuel into a vehicle designed to operate on unleaded fuel;

Tampering with any emission control system installed on or in a vehicle prior to its sale to the ultimate purchaser;

Refusing to permit an authorized representative of Ohio EPA to inspect any motor vehicle or documents related to the vehicle in question;

Knowingly operating a motor vehicle that has been tampered;

Knowingly selling, leasing or renting a tampered motor vehicle (all model years of vehicles are now subject to this prohibition); and

Knowingly tampering with any emission control system installed on or in a motor vehicle after sale and delivery to the ultimate purchaser.

With the passage of Senate Bill 18, Ohio EPA was given specific authority to enforce anti-tampering violations. If violations are discovered at vehicle dealerships or repair facilities and are not corrected by the responsible parties, Ohio EPA may seek enforcement action including penalties. In addition, the amendments to the anti-tampering law allow individuals who have purchased tampered vehicles, or whose vehicles have been tampered by repair facilities, to file a claim with the appropriate court of law. Recision of the transaction or recovery of actual damages may be awarded by the court.

Included in Sections VIII and IX are copies of the Clean Air Act, Section 203 (a) (includes the 1990 amendments), ORC 3704.16, 3704.161, 3704.162 and 3704.99, U.S. EPA's Engine Switching Fact Sheet and U.S. EPA's Exhaust System Repair Guidelines. The fact sheet and repair guidelines were prepared for citizens as well as enforcement personnel in order to clarify U.S. EPA's interpretation of the Clean Air Act tampering provisions. Feel free to use the guidelines during your investigations and to provide copies to interested parties upon request.

Section II

Complaint Handling and Complaint Follow-Up

Section II Complaint Handling

Except for fleet inspections, most of the anti-tampering investigations performed are a result of complaints received by citizens. It is therefore important that complete and accurate information be obtained when the complaint is received. The *Ohio EPA Complaint Report* (See Appendix 1) should be filled out, including a detailed entry in the "Nature of Complaint" section. The information to be included under "Nature of Complaint" is as follows.

1. **Vehicle Information**: Record make, model, year, plate number and VIN of the vehicle in question. The plate number and VIN are often helpful for locating previous owners as well as determining information such as engine size and gross vehicle weight.

2. **Tampering**: Record any and all tampering the complainant has discovered or has been pointed out to him or her. If the tampering was discovered by a repair facility or an individual other than the complainant, try to obtain as much information about the facility or individual (name, address, phone, etc.) as possible.

3. **Background**: Take down any information the complainant can give you regarding previous owners, facilities that have performed repairs on the vehicle and any other background information you believe might be helpful to the investigation.

Although most of the procedures mentioned above seem obvious, it may be helpful to keep the above list handy so that when you receive a complaint it can be used as a checklist. If you take a complaint directly, forward a copy to the Central Office anti-tampering coordinator when the complaint form is completed.

Complaint Follow-up

Once you receive a tampering complaint either directly or from Central Office, the next step is to contact the complainant and to send to the complainant copies of appropriate Revised Code and other relevant documents. The complainant should also be notified that independent legal action is available for their pursuit.

If time permits, an inspection of the vehicle in question may be performed. When inspecting a vehicle make sure to use the *Ohio EPA Vehicle Inspection Form* (Appendix 2) to record all the necessary vehicle information and the results of the tampering inspection. If the tampering is the result of repairs performed on the vehicle, obtain copies of all receipts, work orders, and part orders. If the original catalytic converter appears to have been replaced with an improper one, record all information found on the plate affixed to the converter shell (if an aftermarket converter) and obtain copies of any converter warranty information the complainant has. If the vehicle was purchased in tampered condition, obtain copies of sales receipts and any other documents signed at the time of the sale.

Upon determination that a facility inspection is needed, the next step is to visit the repair facility where the work was performed. If possible, you may want to perform surveillance on the facility prior to entering and introducing yourself. Once you have entered the facility, state the reason for your visit and show them your identification. Give the manager an opportunity to complete a *Statement Form* (See Appendix 3) concerning the tampering incident. It is permissible to let the manager or mechanic see the tampered vehicle if he or she desires (provided the complainant agrees). You should now perform a repair shop inspection (see the Muffler/Repair Shop section for procedures) to determine if any violations exists.

Upon determination that a facility inspection is needed in the case where an alleged tampered vehicle was sold to the complainant, the next stop is to visit the vehicle dealership. Follow the procedures outlined in Section V (see below) of this manual and keep the complainant informed of the results of the inspection (if the complainant desires).

Once you have completed the complaint investigation, forward all forms, receipt copies and other documentation to the Anti-Tampering Coordinator in Central Office, DAPC/MSS. Also include a cover letter summarizing the investigation. Central Office will look over the case and seek enforcement at the state level and forward reports to the federal level if appropriate.

Section III

Muffler/Repair Shop Inspections

Section III Muffler Shop / Repair Shop Investigations

Muffler shops and repair shops specializing in exhaust work are often good places to investigate, even if you have not received complaints about the facility. We have found that exhaust repair shops, particularly small, independently owned shops, are often unfamiliar with the federal rules regarding proper installation and warranty of aftermarket catalytic converters. Shop personnel may also be unfamiliar with the different forms and warranty documents which they are required to complete when an aftermarket converter is purchased and/or installed. Therefore, investigating a repair facility is not only an opportunity to uncover tampering violations but to educate personnel about the proper procedures.

When you enter a muffler (or sometimes a repair) shop, first check the parts supply and the area where used converters are stored. Look for test tubes and pipe bending equipment. Check the used converters for proper labeling. Properly labeled converters will be tagged with a number that can be matched to the customer's invoice (it is also acceptable to use a copy of the customer's invoice as the tag). Make sure that all of the used converters really are damaged or defective (broken substrate, holes through both the heat shield and the converter wall, broken flanges, etc.).

During your inspection of the repair records, you should match invoices to the used, tagged converters. Make sure the replacement converters are proper type and size for the vehicle in question. This can be determined by using the *Aftermarket Converter Check List* (See Appendix 4). Remember that a repair facility should not be replacing a converter on any vehicle that is still covered by the Design and Defect (8 year/80,000 mile) warranty (unless the vehicle's converter was removed or tampered). Warranty work must be performed at a dealership.

After your investigation of the parts supply and used converters is complete, ask the manager to show you at least six months worth of daily records. Given the volume of receipts you will be checking, you will want to have at least two people present to conduct this type of investigation. Look over the invoices and check for the following:

- equipment that might indicate that the vehicle was converted to dual exhaust or that headers were installed;
- invoices with a price but no part number (this is often the case when dual exhaust or a straight pipe is installed); and
- invoices for commercial fleet accounts (in some instances a fleet of vehicles is found to be tampered and tampering was done at a single repair facility).

You should record information from any invoice that appears suspicious on the *Muffler/Repair Shop Invoice Information Form* (See Appendix 7).

Once your inspection of the repair records is complete, you should ask to inspect any recently repaired vehicles on the premises. Use the *On-Site Inspection Report* (See Appendix 6) to record the results of those inspections. If tampering is discovered, complete a *Tampering Report* (Appendix 7).

After investigating the repair shop, schedule time to visit the individuals listed on the suspicious invoices and inspect their vehicles. If you discover tampering, you should complete an *Investigation Follow-Up Form* (See Appendix 8) and have the owner complete a *Statement Form* (Appendix 3). If he or she declines make notes of any conversation with the owner using the *General Contact Report* (See Appendix 9) or the "owner's comments" section of the *Investigation Follow-Up Form*. Use the *General Contact Form* any time you want to record a conversation or incident that occurs during an investigation.

If you discover any tampering or illegal converter use, forward copies of all the forms along with a write-up of the investigation to the anti-tampering coordinator in Central Office, DAPC/MSS. These violations may result in enforcement action being taken by Ohio EPA or U.S. EPA.

Section IV

Commercial and Government Fleet Inspections

Section IV Commercial & Government Fleet Inspections

In Ohio, fleet facilities are the most common targets of anti-tampering inspections. Both commercial and government fleets should be inspected on a regular basis to ensure that fleet operators are maintaining their fleets properly and are aware of current tampering regulations.

When you enter a fleet facility, identify yourself as a representative of Ohio EPA (present your identification badge and federal authorization letter from U.S. EPA or a copy of your Ohio EPA certificate) and ask to speak to the fleet manager. Explain to the manager why you are there and give him or her a copy of the Ohio law and Section 203 (a) of the Clean Air Act (see appendices 10 and 11). Tell the manager that you would like to inspect approximately ten percent of the total fleet. It is best to visit a fleet late in the day, when vehicles are returning to the fleet facility, to ensure that ten percent of the fleet will be on site.

Inspect each vehicle following the procedures detailed in the *Anti-tampering Inspection Procedures* section of this manual. Record your results on the *On-Site Inspection Report* (See Appendix 6). For each fleet vehicle found to be tampered, complete a *Tampering Report* (See Appendix 7). Be sure to detail any maintenance information you can obtain (from maintenance records on file at the facility) in the proper section of the form. If the fleet manager wishes to make a statement about any tampered vehicles, have him or her complete a *Statement Form* (See Appendix 3). If you wish to record additional comments about the fleet investigation, use the *General Contact Form* (See Appendix 9).

If any tampering is discovered, advise the fleet manager that the vehicle(s) must be returned to original manufacture's specifications. Schedule a follow-up visit to make sure that the vehicle(s) is repaired correctly. If tampering is discovered (e.g. converters removed, air pumps disabled/removed, etc.) forward the details of the inspection to the anti-tampering coordinator in Ohio EPA's Central Office, DAPC/MSS.

Section V

Vehicle Dealership Inspections

Section V Vehicle Dealerships

Investigations of vehicle dealerships are often initiated when a complaint is received at your office or Ohio EPA Central Office. Usually the complainant has recently purchased a vehicle and found it to be in a tampered condition.

State law (Revised Code Section 3704.16) prohibits the sale of a vehicle in a tampered condition regardless of the model year of the vehicle. Realistically, you will most often discover tampering on mid-1970s to mid-1980s vehicles - during that time it was not uncommon to remove or disable catalytic converters and air pumps and perform illegal engine switches. Although tampering is less often seen in newer model year vehicles it still occurs and therefore you should not ignore the newer vehicles - especially trucks, 4-wheel drive vehicles and "hot rod" vehicles like Mustangs and Trans Ams - these vehicle types have been found to be popular among tamperers.

When you investigate a vehicle dealership you will use the *Auto Dealer Audit Findings Form.* A facsimile of this form is found in (Appendix 12) of this section. You should have a supply of these three-part forms (provided by Ohio EPA Central Office) in your office. Central Office will supply you with additional forms upon request. Be sure to document all tampering information carefully and make sure that the owner or manager reads and signs the first page when you have finished investigating the dealership. The owner or manager should be given one of the copies of each page of the form before you leave the facility. In addition, you should also provide the owner or manager with a copy of the Ohio anti-tampering law and copies of the anti-tampering fact sheets (See Appendices 10 and 13).

If tampered vehicles are discovered, be sure to go over the form with the owner or manager and discuss each item that you noted as tampered. Unless the owner or manager doesn't want to look at the vehicles, it is a good idea to actually show him or her the tampering you discovered on each vehicle. Inform the owner or manager that the tampered vehicles must be removed from the sales lot or a sign must be posed on the windshield which states "This vehicle is not being offered for sale at this time". This sign should be at least 8 ½" by 11" and the letter size should be 40 point or greater.

If violations are found at the dealership, within a few days of the investigation, write up a *Notice of Violation* (See Appendix 14 for a sample Notice) addressed to the manager or owner of the facility. The Notice should list all the tampered vehicles by make, model year and VIN and should detail the tampering found.

You may want to attach the third part of the *Auto Dealer Audit Findings Form* (See Appendix 12) since it contains all the information that needs to be conveyed. The notice should be sent by certified mail and should specify when the vehicle repairs are to be completed. Written confirmation of the repairs (or salvaging of the vehicles) should be sent by the facility owner or manager to you not later than fourteen days after the repairs have been completed. Written confirmation should also include receipts for parts replacement and repairs as applicable. The amount of time you allow for repairs to be completed will depend on the extent of the tampering

discovered. Simple items (such as a missing hot air hose or disconnected PCV valve) should be repaired within two weeks. More complicated repairs (such as a missing or frozen air pump, improper engine switch or non-conforming exhaust system) should be given at least thirty days or more, depending on the circumstances. If you are not sure about how much time to allow, contact the anti-tampering coordinator in Ohio EPA Central Office.

If you have reason to suspect that the repairs were not performed on the tampered vehicles or they do not respond in writing to the Notice of Violation you should conduct an immediate follow-up inspection. During the follow-up you should check to see if the tampered vehicles have been repaired as well as inspect a few other vehicles that have not been previously inspected. If not conducted immediately after the initial investigation, follow-up investigations should be performed as quickly as possible after the Notice of Violation has been issued. At the time of the follow-up investigation any tampering discovered should be noted on the *Auto Dealer Audit Findings Form* (See Appendix 12) as was done during the initial investigation. An enforcement action request (EAR) should be put together whenever violations are noted during a follow-up investigation.

Section VI

Procedures to Follow When Denied Inspection

Section VI Procedures to Follow When Denied Inspection

On rare occasions, Ohio EPA inspectors and/or designated Ohio EPA inspectors are denied permission to inspect facilities. In these situations it's best not to argue with the individual(s) denying you permission to inspect his/her facility. Rather, it is best to explain the reason(s) for the inspection, and give a general outline of the inspection procedures so as to alleviate misunderstandings. It is important to point out that you are only there to gather information. If this does not convince the owner/manager to allow the inspection to proceed, leave your business card with the owner or manager, thank them for their time, and leave the property accordingly. If they wish to verify your presence and purpose, they may want to call the Anti-Tampering Coordinator at (614) 644-3059.

The next step is to notify the Central Office anti-tampering coordinator of the situation. It is important that central office is aware of the situation to prevent further complications. In several cases, owners/managers of used car dealerships and muffler/repair shops call central office to verify Ohio EPA inspectors and/or Ohio EPA inspection procedures. If central office is not aware of the inspection, they are not able to fully address the situation when they receive a call.

If approved by central office, a Notice of Violation (NOV) should be written for this particular situation by following the sample NOV (see Appendix 15). If further violations continue after the NOV is issued, central office may proceed with an Enforcement Action Request (EAR).

Section VII

Vehicle Tampering Inspection Procedures

Section VII Anti-Tampering Inspection Procedures

The first step of any anti-tampering inspection is to lift the hood of the vehicle and look for the emissions label (VECI label) and routing diagram. These will serve as your best references during the inspection. In the absence of these labels, refer to an emissions guidebook such as the Cascade Manual. Inspect the vehicle for the presence of all the emissions systems listed on the label or in the guidebook following the procedures listed below.

Catalytic Converter Inspection

Visually inspect the exhaust system for the presence of the catalytic converter. Check to ensure that the converter is properly connected to the exhaust system and, if applicable, the air tube is connected to the catalyst and the air injection system. NOTE: You may be able to see the oxygen sensor along the exhaust system while you are looking at the converter.

Evaporative Emission System Inspection

The evaporative emission system is most commonly tampered by:

1. Removing the gasoline filler cap or drilling a “vent hole” in the cap;
2. Removing the charcoal filter canister; and
3. Disconnecting or removing the hoses leading to the charcoal canister.

The evaporative canister should be visually inspected for:

1. The presence of the charcoal canister;
2. The presence of the connecting hoses and tubing; and
3. Presence of a proper fitting, non-vented gas tank cap.

Positive Crankcase Ventilation (PCV) Inspection

The PCV system is most commonly tampered by:

1. Removing the PCV valve; and
2. Disconnecting the hoses which connect the system.

Visually inspect the PCV system for:

1. Presence of the positive crankcase ventilation valve; and

2. Proper connection of the PCV hoses at the valve cover, carburetor and intake manifold.

Thermostatic Air Intake System Inspection

The thermostatic air system is most commonly tampered by:

1. Inverting the air filter canister lid;

2. Using a taller air filter than is called for by the manufacturer's specifications or replacement of the original equipment filter canister. (When an aftermarket air cleaner is used, there is a good chance that other emission systems, such as the PCV and EVAP systems, may be tampered);

3. Heat pipe from the manifold may be disconnected;

4. Vacuum hose to the temperature sensor may be missing or loose or the damper door may be pulled off; and

5. Heat shroud on the exhaust manifold may be missing due to rust or it falling off.

The thermostatic air system should be visually inspected for:

1. An inverted air filter or a filter which is too large;

2. Non-stock (usually "high performance") air filter canister;

3. Broken, missing or disconnected heat pipe;

4. Loose or missing vacuum hose;

5. Missing or disconnected fresh air hose; and

6. Missing heat shroud on the exhaust manifold.

Air Injection System (AIR) Inspection

The air injection system is most commonly tampered by:

1. Removing the air pump or disabling it by removing the belts;

2. Removing, disconnecting or misrouting the air pump hoses;

3. Removing by-pass and check valves; and

4. Removing the pulse air system or disconnecting the tubing.

Visually inspect the air injection system for:

1. The presence of the air pump and air pump belt;

2. The presence and condition of connecting hoses or tubing;

3. The presence of by-pass or check valves; and

4. The presence of the pulse air system (if used) and the presence of associated hoses or tubing.

Exhaust Gas Recirculation (EGR) System Inspection

The EGR system is most often tampered by:

1. Removing the EGR valve;

2. Removal or mislocation of vacuum lines; and

3. Blockage of vacuum lines with BBs or small ball bearings.

The EGR system should be visually inspected for:

Presence of EGR valve;

Missing, disconnected or blocked vacuum lines; and

EGR wiring to computer module, if applicable.

Oxygen Sensor Inspection

The Oxygen sensor is usually tampered with by disconnecting the wiring leading form ‘the sensor or removing the senor entirely. You should check for the presence of the oxygen sensor (make sure it is not replaced with some type of cap) and for the proper wiring connections.

Computer Command Controls

If you have a suspicion that the computer command controls have been tampered, a simple field test may give some clues as the to the computer command controls’ status. Turn the key in the ignition just far enough to see if the warning lights on the dashboard have come on. Turning too far will start the vehicle. If the lights do not come on, there is a possibility that the system has been disconnected. Look for a small drill hole or a dimple in the clear plastic over where the check engine light should be located. These would indicate the bulb has been destroyed.

Section VIII

Supplemental Information

Supplemental Information 1

OAC Rules 3745-80-01 through 3745-80-03

Chapter 3745-80 Statewide Motor Vehicle Anti-Tampering Program

3745-80-01 Definitions.

"[Comment: For dates of non-regulatory government publications, publications of recognized organizations and associations, federal rules, and federal statutory provisions referenced in this rule, see paragraph (M) of this rule titled "Referenced materials."]

(A) "Anti-tampering inspector" means any authorized representative of the director with the authority to investigate, inspect and otherwise determine compliance with sections 3704.16 to 3704.162 of the Revised Code.

(B) "Anti-Tampering Procedures Manual" means the most recent, official document issued by the Ohio environmental protection agency to anti-tampering inspectors detailing the procedures to be followed when conducting inspections to determine compliance with sections 3704.16 to 3704.162 of the Revised Code.

(C) "Clean Air Act Amendments" means the Clean Air Act , and regulations adopted under it.

(D) "Director" means the director of the Ohio environmental protection agency or the director's authorized representative.

(E) "Emission control system" means any system designated by the United States environmental protection agency as an emission control system under title II of the Clean Air Act Amendments and includes any device or element of design of the system.

(F) "Emission system reference manual" means the most current reference manual with emission system application tables available from a source approved by the director or the director's designee.

(G) "Lessee" means any person who uses a motor vehicle pursuant to a bailment, lease or other contractual arrangement under which a charge is made for its use at a periodic rate for a term of thirty continuous days or more.

(H) "Motor vehicle facility" means premises owned, operated, rented, leased or otherwise used by any person engaged in the sale, lease, service or rental of motor vehicles or motor vehicle parts.

(I) "Person" means the state, any political subdivision, public or private corporation, partnership, firm, association, individual, organization or other entity.

(J) "Renter" means any person who uses a motor vehicle pursuant to a bailment, lease or other contractual arrangement under which a charge is made for its use at a periodic rate for a term of thirty continuous days or less.

(K) "Tamper with" means to remove permanently or temporarily, except for repair, replacement or converting for use of a clean alternative fuel, to bypass, defeat, or render inoperative, in whole or in part, any emission control system that is installed on or in a motor vehicle, for purposes of defeating, bypassing or otherwise circumventing the requirements of the Clean Air Act Amendments and/or Chapter 3704. of the Revised Code and the rules promulgated thereunder.

(L) “Ultimate purchaser” with respect to any new motor vehicle, means the first person, other than a dealer in its capacity as a dealer, who is a good faith purchaser of such new motor vehicle for purposes other than resale.

(M) Referenced materials. This chapter includes references to certain subject matter or materials. The text of the referenced materials is not included in the rules contained in this chapter. Information on the availability of the referenced materials as well as the date of, and/or the particular edition or version of the material is included in this rule. For materials subject to change, only the specific version specified in this rule are referenced. Material is referenced as it exists on the effective date of this rule. Except for subsequent annual publication of existing (unmodified) Code of Federal Regulation compilations, any amendment or revision to a referenced document is not applicable unless and until this rule has been amended to specify the new dates.

(1) Availability. The referenced materials are available as follows:

(a) Code of Federal Regulations. Information and copies may be obtained by writing to: “Superintendent of Documents, Attn: Electronic products, PO Box 37082, Washington DC, 15250-7954.” The full text of the CFR is also available in electronic format at www.access.gpo.gov/nara/cfr/. The CFR compilations are also available for inspection and copying at most public libraries and “The State Library ofOhio.”

(b) Mobile Source Enforcement Memorandum No. 1A: Information and copies are available by writing to: “U.S. Environmental Protection Agency, 1200 Pennsylvania Ave., NW, Washington, D.C. 20460-0001.” The full text of the document is also available in electronicformatat http://www.epa.gov/compliance/resources/policies/civil/caa/ mobile/tamper-memo1a.pdf. The document is also available for inspection and copying at most public libraries and “The State Library of Ohio.”

(2) Referenced materials.

(a) 40 CFR, Part 85; “Subpart “V” — Emissions control system performance warranty regulations and voluntary aftermarket part certification program;” 45 FR 34839, May 22, 1980, as amended at 45 FR 78458-78464, November 25, 1980, 46 FR 38692, July 29, 1981, 50 FR 34798, August 27, 1985, 54 FR 32587-32593, August 8, 1989, 58 FR 65554, December 15, 1993, and 64 FR 23919, May 4, 1999, 70 FR 40432, July 13, 2005.

(b) Clean Air Act; contained in 42 USC 7401 to 7671q; “The Public Health and Welfare-Air Pollution Prevention and Control;” published January 3, 2007 in the 2006 Edition of the United States Code.

(c) Mobile Source Enforcement Memorandum No. 1A; “Interim Tampering Enforcement Policy;” dated June 25, 1974, updated April 1997.

(d) Title II of the Clean Air Act; contained in 42 USC 7521 to 7590; “Emission Standards for Moving Sources;” published January 3, 2007 in the 2006 Edition of the United States Code.

Effective: 02/14/2010

R.C. 119.032 review dates: 11/20/2009 and 02/14/2015

Promulgated Under: 119.03

Statutory Authority: 3704.03

Rule Amplifies: 3704.16

Prior Effective Dates: 11/8/94, 1/22/05

3745-80-02 Tampering prohibitions.

(A) No person shall sell, offer for sale, possess for sale, advertise, manufacture, install or use any part or component intended, by such person, for use with or as part of any motor vehicle when a purpose is to bypass, defeat, or render inoperative, in whole or part, the emission control system.

(B) No person shall introduce leaded fuel into a motor vehicle that is designed, manufactured or certified by the United States environmental protection agency to use only unleaded fuels.

(C) No person shall tamper with any emission control system installed on or in a motor vehicle prior to its sale and delivery to the ultimate purchaser or lessee.

(D) No person shall knowingly operate a motor vehicle that has been tampered with.

(E) No person shall knowingly sell, lease, rent or offer to sell, lease, or rent or offer to transfer title or a right to possession of a motor vehicle that has been tampered with. In the case of a motor vehicle dealer licensed under Chapter 4517. of the Revised Code, a motor vehicle is considered to be offered for sale, lease or rental at a motor vehicle facility unless it is separated or otherwise segregated from other motor vehicles being offered for sale, lease or rental, or unless a placard meeting the following requirements is displayed on the vehicle's windshield.

(1) The statement "this vehicle is not being offered for lease or rental at this time" shall be printed on the placard using block letters of no less than forty point bold type.

(2) The dimensions of the placard shall be at least eight and one half inches by eleven inches.

(F) No person shall knowingly tamper with any emission control system installed on or in a motor vehicle after sale, lease, or rental and delivery of the motor vehicle to the ultimate purchaser, lessee or renter.

(G) Any person who witnesses any violation of this rule or of sections 3704.16 to 3704.162 of the Revised Code, or suspects a violation has occurred, may report the alleged violation by contacting the mobile sources section of Ohio environmental protection agency or the appropriate Ohio environmental protection agency district office or local air pollution control agency.

(H) The following motor vehicles are exempt from the requirements of this rule:

(1) Race motor vehicles which are operated off of public roads and highways one hundred per cent of the time.

(2) Motor vehicles for which salvage certificates of title have been issued under division (C) of section 4504.11 of the Revised Code.

Effective: 02/14/2010

R.C. 119.032 review dates: 11/20/2009 and 02/14/2015

Promulgated Under: 119.03

Statutory Authority: 3704.03

Rule Amplifies: 3704.16

Prior Effective Dates: 11/8/94, 1/22/05

3745-80-03 Anti-tampering inspection procedures and requirements.

"[Comment: For dates of non-regulatory government publications, publications of recognized organizations and associations, federal rules, and federal statutory provisions referenced in this rule, see paragraph (M) of rule 3745-80-01 of the Administrative Code titled "Referenced materials."]"

(A) For the purposes of investigating reported tampering violations and conducting routine audits to determine compliance with sections 3704.16 to 3704.162 of the Revised Code, the director may inspect, during normal business hours, any motor vehicle or documents located at a motor vehicle facility.

(B) All anti-tampering inspectors shall satisfactorily complete the training required to receive a designation of authorized representative of the United States environmental protection agency for the purpose of conducting anti-tampering investigations or other motor vehicle anti-tampering training approved by the director. Each anti-tampering inspector who satisfactorily completes the training shall be issued a certificate by the Ohio environmental protection agency. The certificate shall be valid for three years from the date of issuance. Renewal anti-tampering training may be required in order to renew the certificate. If an inspector fails to satisfactorily complete any required renewal training prior to the certificate expiration date, the inspector shall surrender the certificate.

(C) Upon receipt of a reported anti-tampering violation regarding a motor vehicle facility, or for the purpose of inspecting a motor vehicle facility to determine compliance with sections 3704.16 to 3704.162 of the Revised Code, anti-tampering inspectors shall inspect a variety of motor vehicle makes, model years and types so as to provide an adequate cross section of the motor vehicles offered for sale at the motor vehicle facility.

(D) During motor vehicle facility investigations, or investigations of reported violations, pursuant to paragraph (G) of rule 3745-80-02 of the Administrative Code, anti-tampering inspectors shall inspect the motor vehicle emission systems in accordance with the procedures listed in the statewide anti-tampering procedures manual. Motor vehicles shall be inspected for compliance with the original manufacturer's United States environmental protection agency design specifications. After-market replacement parts and add-on and modified parts meeting the performance criteria specified in 40 Code of Federal Regulations, Part 85, Subpart V; the requirements of the United States environmental protection agency policy document, memorandum 1A or have not otherwise been found in violation of the anti-tampering provisions of the Clean Air Act as amended, are considered to be in compliance with this chapter.

(E) The emission system reference manual or the motor vehicle emission control information (VECI) label located on each motor vehicle shall be used to determine the motor vehicle

emissions systems requiring inspection. If a conflict exists, the VECI label shall take precedence. The emission systems subject to inspection may include, but not be limited to:

(1) Catalytic converter system;

(2) Evaporative emission system;

(3) Fuel inlet restrictor;

(4) Positive crankcase ventilation system;

(5) Thermostatic air intake system;

(6) Air injection reaction system;

(7) Exhaust gas recirculation system;

(8) Oxygen sensor; and/or

(9) Computer control system.

Effective: 02/14/2010

R.C. 119.032 review dates: 11/20/2009 and 02/14/2015

Promulgated Under: 119.03

Statutory Authority: 3704.03

Rule Amplifies: 3704.16

Prior Effective Dates: 11/8/94, 1/22/05

Supplemental Information 2

U.S. EPA's Exhaust Repair Guidelines

UNITED STATES ENVIRONMENTAL PROTECTION AGENCY
WASHINGTON, D.C. 20460

OFFICE OF
AIR AND RADIATION

TO WHOM IT MAY CONCERN:

The Field Operations Support Division (FOSD) of the Office of Mobile Sources (OMS) has moved its office to a new location as of April 6, 1992. All inquiries about emissions warranties, tampering and aftermarket catalytic converters should be directed to our new address and phone numbers:

ENVIRONMENTAL PROTECTION AGENCY
FOSD (6406J)
401 M STREET, SW
WASHINGTON, DC 20460

(202) 233-9100 or (202) 233-9040

Complaints about tampering should be directed to (202) 233-9060 for the eastern half of the U.S. and (303) 969-6476 for the western half of the U.S.

UNITED STATES ENVIRONMENTAL PROTECTION AGENCY
WASHINGTON, D.C. 20460

FEB 2 1993

OFFICE OF
AIR AND RADIATION

Charles E. Ayers
Manager, Customer Relations
Midas International Corporation
225 North Michigan Avenue
Chicago, IL 60601-7601

Dear Mr. Ayers:

Thank you for your letter of November 19, 1992 in which you requested that we respond to six examples of situations that have been encountered by your exhaust repair facilities. Below we have repeated the situations and provided a response as to how each situation should be handled in order to be in compliance with Environmental Protection Agency (EPA) policy.

SITUATION #1: A 1984 Chevrolet van where the original 6-cylinder engine has been replaced with an 8-cylinder engine taken from a 1974 vehicle. Headers have been installed and the consumer requests that a dual exhaust system (without catalysts) be installed. What are the options of the exhaust repair facility in this instance?

ANSWER: In answering this question, we have assumed that this is a light-duty van. It is generally illegal to replace an engine with an older engine, as has occurred in this situation. The installation of headers may also be a violation of the tampering prohibition. Regardless of this issue, the repair facility would need to install an exhaust system equivalent to an exhaust system for a 1984 or newer certified configuration vehicle of this type. If the 1984 Chevrolet van was manufactured with a catalytic converter, one must be installed that is the same type (e.g., two-way, three-way, three-way-plus-air) as the vehicle was manufactured with, and one that can handle the capacity of the larger engine that has been installed. The installation of dual exhaust would only be allowed if a 1984 or newer 8-cylinder version of this vehicle was certified with a dual exhaust configuration and the vehicle has been modified to be identical to that certified configuration. EPA will also allow the installation of dual exhaust on a heavy-duty vehicle which has a certified engine that did not have any converters when it came from the factory. The reason for this is that these heavy-duty engines without converters only had maximum backpressure specifications when they came from the factory (and no minimum backpressure specifications) and catalyst light-off would not be affected.

Printed on Recycled Paper

EPA recommends that if you perform any work on a vehicle that has been tampered with, you should document the condition of the vehicle when it came into the shop and precisely what work was performed. You should do this by noting it on the invoice and having the customer sign an acknowledgement. This will help protect you from being accused of performing the improper work.

SITUATION #2: A 1960 Ford Mustang replica kit car which requires chassis parts from a 1975 Mustang. The engine required is a 5.0 liter, 302 CID from a 1980 Mustang, and the consumer requests the installation of an exhaust system. Does this vehicle require a catalytic converter? If so, how many and/or what type of converter should be installed?

ANSWER: If the majority of the vehicle chassis is taken from a 1975 Mustang, for purposes of exhaust system repair, EPA would consider it to be a 1975 model vehicle. This vehicle should be approached as though it has had it's engine switched (i.e., the engine that was originally certified with the 1975 chassis has been replaced with a 1980 engine). Therefore, in accordance with EPA's Engine Switching policy, the vehicle would need to have an exhaust system that makes the vehicle identical to a 1975 or newer certified configuration. Since the engine in this vehicle is a 1980 model, installing an exhaust system for a 1980 Mustang would be the most plausible solution. A copy of our Engine Switching fact sheet is enclosed.

Based on EPA's Certificate of Conformity for the 1980 Mustang 5.0 liter engine, the 49-state version of this vehicle requires a two-way converter system, and the California version requires a three-way converter system. However, the number and type of converters may vary depending on the specific engine family. The best source of information concerning this matter is the vehicle manufacturer.

Certain vehicles completely assembled by kit car manufacturers, or built from complete kits, should be built according to EPA's Kit Car Policy (copy enclosed). Those vehicles and their accompanying documentation will bear a label as to the make and model year of the original engine family represented by the vehicle. In these cases, use the information from that label to ascertain the year of the engine and the appropriate replacement catalysts. If you have any questions about the Kit Car Policy, please call EPA's Manufacturers Operations Division (MOD) at (202) 233-9250.

SITUATION #3: A 1987 Pontiac J2000 Sunbird has 45,000 miles on it. The original purchase date is not available. The vehicle was built 2/87 and is brought into the exhaust repair facility on 1/6/92 by the vehicle's second owner for converter replacement. Is the catalyst still under the manufacturer's original equipment warranty?

ANSWER: The Design and Defect Warranty covers repair of emission control related parts which become defective during the first five years or 50,000 miles of vehicle use, whichever occurs first. The warranty period begins either when the vehicle is delivered to the ultimate purchaser, or, if it is first put into service as a demonstrator vehicle or company car, then from the date it was first put into service. In the above situation, since the vehicle was built in February of 1987, it could not have been sold or put into service prior to February of 1987, and, thus, the five year warranty period would expire no earlier than February of 1992, given that the vehicle had fewer than 50,000 miles. Since the vehicle in the above situation only had 45,000 miles on it, replacement of a defective catalytic converter should be covered under the manufacturer's warranty.

If you run into a situation in the future where the vehicle is greater that 5 years old according to the date it was built, the vehicle owner should be able to determine the date the vehicle was delivered to the first purchaser, or first put into service, by contacting the manufacturer's customer relations office, or an authorized dealer, and providing them with the Vehicle Identification Number.

SITUATION #4: A 1972 Ford F-150 pickup requires exhaust service. Ford did not offer dual exhaust as an option in 1972. Can a dual exhaust system be installed on this vehicle?

ANSWER: Because Ford did not offer dual exhaust as an option on this vehicle, a dual exhaust system may not be installed since the vehicle would not be identical to any certified configuration, and exhaust backpressure is an element of design of the emissions control system. As explained in the answer to situation #1 above, the only exception would be if the vehicle was a heavy-duty model and came from the factory without catalytic converters.

SITUATION #5: The owner of a 1989 Honda Accord requests that a muffler and tailpipe be installed. During the inspection before service begins, it is determined that the catalytic converter is broken up and leaking. The vehicle owner does not agree to purchase a catalyst. Knowing that the converter is not working properly, can the service facility repair just the muffler and tailpipe?

ANSWER: Yes, you can perform repairs to the muffler and tailpipe without replacing the catalytic converter. However, the vehicle owner should be notified that if the converter is not replaced, broken pieces of the substrate may flow into the muffler causing it to clog. The vehicle owner should also be advised that replacement of a defective converter may be covered by the vehicle manufacturer's warranty.

SITUATION #6: A 1982 Mercedes 230 SE was purchased in Germany and brought to the United States by the consumer. The vehicle has no catalytic converter on it. Should an exhaust repair facility install a catalyst on this vehicle? If so, what type?

ANSWER: When this vehicle was imported to the United States, the vehicle owner should have either received an exemption from bringing the vehicle into conformity with U.S. emissions standards, or had the vehicle modified to meet U.S. emissions standards. If the vehicle was exempted upon importation, the vehicle owner should be able to provide documentation which says the vehicle is exempt and, therefore, EPA would not require the vehicle to have a catalytic converter. However, EPA would allow the installation of a catalytic converter on an exempt vehicle.

If the vehicle was modified to meet U.S. emissions standards, the vehicle should either have a letter of conformity from EPA or an emissions label located in the engine compartment stating that the vehicle was modified to meet EPA emission requirements, and the name of the Independent Commercial Importer (ICI) that made the modifications. Vehicles that were imported through an ICI should have a parts list document which identifies the type of catalytic converter that was installed on the vehicle when it was modified. ICI's are also required to provide an emissions warranty on the vehicles they modify and the vehicle owner should contact the ICI regarding repairs covered by the warranty. For vehicles that were not modified by an ICI but have a letter of conformity, EPA would allow the repair facility to install an exhaust system (which may include catalytic converters) equivalent to the same model year as the U.S. version vehicle.

Finally, if the vehicle did not receive an exemption upon importation, and was not modified to meet U.S. emissions standards, EPA would allow a repair facility to install an exhaust system (which may include catalytic converters) equivalent to the same model year as the U.S. version vehicle.

If the vehicle owner does not know the vehicle's importation status (i.e., whether it received an exemption or certificate of conformity from EPA, or was imported through an ICI), the vehicle owner or exhaust repair facility may contact the Imports Section of EPA's Manufacturers Operations Division (MOD) at (202) 233-9660.

I trust this letter sufficiently responds to your questions. If we can be of further assistance in this matter, or if you have other questions about aftermarket catalytic converters or other exhaust repair issues, please call Ms. Whitney Trulove-Cranor of my staff at (202) 233-9036.

Sincerely,

/S/

Mary T. Smith
Director
Field Operations & Support Division

Enclosures

UNITED STATES ENVIRONMENTAL PROTECTION AGENCY
WASHINGTON, D.C. 20460

JUL 29 1992

OFFICE OF
AIR AND RADIATION

Mr. Jim Wilder
Undercar Digest
MD Publications, Inc.
P. O. Box 2210
Springfield, MO 65801-2210

Dear Mr. Wilder:

Thank you for the questions you faxed to us on July 21, 1992 concerning exhaust repairs and dual exhaust. Below we have repeated the questions and provided a response for your readers.

QUESTION 1: Is it legal under EPA guidelines to repair the pipes on converters--such as the Subaru Y-pipe/converter?

ANSWER: Yes. The replacement of pipes and heat shields, or repair of the converter itself, is permitted and encouraged as long as the repairs do not affect the function of the converter or other emissions related systems, affect the distance from the converter(s) to the engine, or void the emissions warranties.

QUESTION 2: Reference to: "Learning the Hard Way," Undercar Digest July 1992. Your statement, "Installing dual exhaust on a 1975 or newer vehicle that was not originally equipped with it, you will pay the fine if you are caught." I have spoken with Steve Albrink many times and this statement as per Steve should be 1968 or newer vehicles. Please comment as to which is correct. This is a good example of why so many regulations are misunderstood. You don't get the same answer twice.

ANSWER: Model year 1968 and newer vehicles are subject to the requirements of the Clean Air Act (Act). Therefore, it is considered a violation of the Act to tamper with the emissions control systems on 1968 and newer model year vehicles. Installing a dual exhaust system on a 1968 or newer light-duty vehicle, catalyst or non-catalyst, would be considered a violation unless the vehicle was certified with a dual exhaust configuration. However, EPA does allow the installation of dual exhaust on a heavy-duty vehicle which did not have any converters when it came from the factory. The reason for this is that these heavy-duty engines only had maximum backpressure specifications when they came from the factory and no minimum backpressure specifications.

We appreciate the opportunity to respond to these questions and hope it helps clarify these matters for your readers. If we can be of further assistance, please let us know.

Sincerely,

/S/

Mary T. Smith
Director
Field Operations and Support Division

UNITED STATES ENVIRONMENTAL PROTECTION AGENCY
WASHINGTON, D.C. 20460

JUN 7 1991

OFFICE OF
AIR AND RADIATION

Mr. Jim Wilder
Undercar Digest
MD Publications, Inc.
P.O. Box 2210
Springfield, MO 65801-2210

Dear Mr. Wilder:

Thank you for the questions you faxed to us on May 14, 1991 concerning exhaust repairs and dual exhaust. Below we have repeated the questions and provided a response for your readers.

Question 1. If a 1975 or newer V-8 equipped vehicle has OE dual converters coming off the exhaust manifolds and then forms into a single exhaust pipe, can I dual the system out directly behind the converters?

Answer: No. Federal law prohibits any person from removing or rendering inoperative any emission control device or element of design installed on or in any motor vehicle or motor vehicle engine. The exhaust system configuration, including the location of the converters, and the exhaust pipe diameter and length, are items specified by the manufacturer during certification because engines and some of the associated emission systems are generally affected by the exhaust backpressure, which subsequently affects vehicle emissions. Thus, the backpressure and the exhaust system configuration are elements of design of the emission control system as certified by the vehicle manufacturers. Therefore, any change to that system could be considered a violation of federal law. Additionally, such an installation may also void the emission warranties afforded vehicle owners under section 207(a) and (b) of the Act.

While we would not recommend, encourage or endorse any exhaust modification that makes the vehicle different than the original system, at the present time we are not pursuing enforcement actions if a muffler or repair shop merely puts on "fake" dual exhaust systems after (not at) the last converter <u>and</u> after the exhaust system has been wyed together to a single exhaust pipe.

Question 2. Can I dual it out from behind the single exhaust pipe?

Answer: As the second paragraph of the response to question 1 indicates, we would not recommend, encourage or endorse any such modification because it may void the warranties and adversely affect the performance, fuel economy and even exhaust emissions in some cases. However, at the present time we are not pursuing cases if someone duals out from behind the single exhaust pipe with "fake" duals after the last converter and after the exhaust system comes together to a single exhaust pipe.

This should not be construed to mean that you can use one of the direct fit converters marketed by some manufacturers which have dual outlets and either dual or single inlets to start the duals at the converter. We consider this type of modification to be a violation that we will enforce.

Question 3. Can I install glasspacks or small turbo mufflers instead of direct-fit or catalogued replacement universal mufflers?

Answer: Again, as explained in the response to question 1, exhaust backpressure is an element of design of the emission system and any change could be considered a violation because of the possible effects on emissions. However, EPA is currently not pursuing enforcement actions on these types of potential violations at the present time. Any such changes should be approached cautiously because of the potential to adversely affect emissions, performance, and warranty coverage.

Question 4. Can I drastically change the pipe configuration on a vehicle, as long as it is behind the OE converter configuration (side pipes or stacks on pickups, for example)?

Answer: The same answer applies here as the previous three questions. EPA is currently not pursuing enforcement actions on potential violations that are down stream of the last converter in the system and downstream from where the exhaust system comes together as a single system. The same concerns about the potential problems with warranty coverage, emissions, and performance mentioned above apply here as well.

Question 5. Prior to passage of the new Clean Air Act Amendments, vehicle owners could not be prosecuted by the federal government for tampering with their own vehicles. Can I work on a vehicle that was tampered with by a Do-It-Yourselfer, prior to November 15, 1990?

Answer: Yes, you can work on a vehicle that was previously tampered with. However, if you are replacing a part that is not the proper part for that vehicle and emission system, then you are required to put the proper parts back on the vehicle if you have to remove them for any reason. The installation of improper parts or components which defeat, by-pass or render inoperative any emission control part or element of design originally installed or designed into the system by the manufacturer, is illegal. In other words, if you perform any work on any part of the vehicle which has been previously tampered with, you must perform the correct repair or not do it at all in order not to be liable for tampering. This is true regardless of the age or mileage on the vehicle and applies to any motor vehicle which was designed to meet federal emission standards. For passenger cars and light-duty trucks, this means all 1968 or newer model years.

Also, if you perform any work on a vehicle that has been tampered with, you should document the condition of the vehicle when it came into the shop and precisely what work was performed to protect yourself from being accused of doing the improper work. You should do this by at least noting it on the invoice and possibly have the customer sign an acknowledgement. Photographs or drawings stapled to the invoice are also helpful.

In addition, if you or any person assists in the completion of any tampering (such as installing dual exhaust where the customer has installed headers even if converters are installed on both sides), that person has participated in the act of tampering begun by someone else and is also liable for the tampering violation. If someone has installed headers on a vehicle and wants you to complete the work of installing dual exhaust, you should recommend that it be put back in the original configuration. If the customer refuses to do that, then the only thing you can do is restore the system to a single system immediately behind the headers and put any required converters in the proper locations.

As mentioned in our recently released Exhaust Repair Guidelines, one exception to this is if the customer comes in with an already complete dual exhaust system that is rotted out and is willing to put on converters on each side. The only other exception is if the vehicle is a heavy-duty truck which did not have any converters when it came from the factory. Since these vehicle engines only had maximum backpressure specifications when they came from the factory and no minimum backpressure specifications, it would not be illegal to install a dual exhaust system on such a vehicle.

Question 6. Who should I call if a vehicle that has been tampered with comes into my shop for exhaust system repairs and the vehicle owner refuses to allow me to make the system legal? I don't want to be prosecuted for something I'm not responsible for?

Answer: As long as you don't tamper with the system, help someone finish or complete the tampering, or install an incorrect part or system on a vehicle, you would not be liable for any violations. A prudent repair shop may want to refuse to do any work unless the vehicle owner authorizes complete restoration to the original certified configuration.

We would recommend that any repairs performed on a vehicle which has been tampered with be approached with caution and that appropriate measures be taken to precisely document the condition of the vehicle when it entered and left the shop. If you don't even work on the vehicle you may still want to fill out an invoice and advise the customer of the needed repairs. If you refuse to perform certain work which is illegal and you believe the customer is going elsewhere and getting it done, we recommend that you write down the date, customer's name (and address), make, model, year, license number, the condition of the vehicle when it left your shop, and where you believe he (or she) is getting the work done along with any information which leads you to that conclusion. Any information concerning tampering can be sent to our enforcement staff in either Washington, D.C. or Denver, Colorado (western half of the country) at the following addresses:

U.S. EPA
Eastern Field Office
FOSD (EN-397F)
401 M Street, S.W.
Washington, D.C. 20460
(202) 233-9080

U.S. EPA
Western Field Office
12345 W. Alameda Parkway
Suite 300
Denver, CO 80228
(303) 969-6476

The more information you supply us with the more likely it is that we can do something about it. If necessary, you can remain anonymous. Some people think that this is "tattling" but we believe that you should recognize it as helping to keep the air clean for all of us. We also believe that enforcement is necessary to level the "playing field" and make all the players play by the same rules so that shops doing legitimate business will not be at a competitive disadvantage. We realize that those are precisely the kind of pressures that encourage illegal activity.

We appreciate the opportunity to respond to these questions and hope it helps clarify these matters for your readers. If we can be of further assistance in clarifying these matters, please let us know.

Sincerely,

151

Mary T. Smith
Director
Field Operations and Support Division

UNITED STATES ENVIRONMENTAL PROTECTION AGENCY
WASHINGTON, D.C. 20460

FEB 14 1991

OFFICE OF
AIR AND RADIATION

Dear Automotive Parts Manufacturer, Distributor,
Retailer or Installer:

On November 15, 1990, the Clean Air Act was amended to include a new prohibition which affects you. The Clean Air Act now prohibits any person from manufacturing, selling, offering for sale, or installing any part or component intended for use with, or as part of, any motor vehicle, where a principal effect of the part or component is to bypass, defeat, or render inoperative any device or element of design, and where the person knows or should know the part or component is being put to such use. A civil penalty of up to $2,500 may be imposed for each violation of this defeat device prohibition.

EPA has determined that a catalytic converter replacement pipe, also known as a converter "test pipe," is a part or component intended for use with a motor vehicle for which a principal effect is to bypass, defeat, or render inoperative a vehicle's catalytic converter. As a result, EPA believes it is illegal for any person to manufacturer, sell, offer for sale or install a catalytic converter replacement pipe. Moreover, this prohibition is not restricted to catalyst replacement pipes, but applies also to <u>any</u> device whose principal effect is to bypass, defeat, or render inoperative an emission control device or element design installed on a motor vehicle. The penalty for violations is up to $2,500 for each such device which is manufactured, sold, offered for sale or installed on a motor vehicle.

If you have been involved in the manufacture, sale or offering for sale, or installation of defeat devices, we suggest you immediately stop manufacturing, selling or installing defeat devices, and document that you properly disposed of any such devices.

Because tampering with motor vehicles by installing defeat devices is very harmful to the air we breathe, we intend to aggressively enforce this new defeat device prohibition. We intend to focus our enforcement efforts not only on the manufacturers of these defeat devices, but also on auto parts houses and repair facilities who stock, sell or install such devices.

Sincerely yours,

Mary T. Smith
Director
Field Operations and Support Division

Printed on Recycled Paper

UNITED STATES ENVIRONMENTAL PROTECTION AGENCY
WASHINGTON, D.C. 20460

MAY 11 1992

OFFICE OF
AIR AND RADIATION

Mr. Jim Wilder
Undercar Digest
MD Publications, Inc.
P. O. Box 2210
Springfield, MO 65801-2210

Dear Mr. Wilder:

Thank you for the questions you faxed to us on April 22, 1992 concerning exhaust repairs and dual exhaust. Below we have repeated the questions and provided a response for your readers.

QUESTION 1: A 1981 Chevrolet Malibu, recently purchased from a used car lot, comes to a muffler shop for its Missouri State Safety inspection. Missouri requires all passenger car vehicles 1980 and newer to be equipped with catalytic converters. Once on the lift, the technician discovers the vehicle has been altered with exhaust headers, straight pipes and dual exhaust. The technician tells the motorist that the vehicle can only pass inspection if the vehicle header pipes are fitted to a "Y" pipe, followed by a converter and then a single exhaust pipe or another reverse "Y" pipe to form "fake" dual exhaust. The car owner says he bought the vehicle because it has dual exhaust and wants the shop to keep the true dual configuration, except add a universal converter to each exhaust pipe. Since it is a non-catalogued application, the technician says he doesn't know if the exhaust temperatures from the singular pipes are hot enough for the two converters to reach light off temperatures for the catalyst. What should he do?

ANSWER: EPA recommends that if any repair work is to be performed on emission control related components that have previously been tampered with, the system should be restored to its original certified configuration. While we would not recommend, encourage or endorse any exhaust modification that makes the vehicle different than the original certified system, at the present time we are not pursuing enforcement actions if a muffler or repair shop merely puts on "fake" dual exhaust systems after (not at) the last converter and after the exhaust system has been "Y"ed together to a single exhaust pipe. Additionally, EPA would not currently pursue enforcement action against facilities for installing converters on a vehicle that came into

Printed on Recycled Paper

the shop with a dual exhaust system, although it could still be considered tampering. We recommend you consult with State officials regarding applicable State laws.

QUESTION 2: A motorist driving a 1987 passenger car takes his vehicle to a repair shop where the technician discovers that the catalytic converter is defective and requires replacement. The vehicle has less than 50,000 miles on it. The vehicle is from out-of-state, has been owned by at least one or two previous owners, and the owner's manual is missing. Is there some place the technician can call and provide the Vehicle Identification Number and find out when the vehicle actually went into service or can he use the vehicle manufacture date?

ANSWER: The warranty period begins either when the vehicle is delivered to the ultimate purchaser or if it is first put into service as a demonstrator vehicle or company car, then from the date it was first put into service. To determine the date the vehicle was delivered to the ultimate purchaser or first put into service, the vehicle owner may contact the customer relations office of the manufacturer and provide them with the Vehicle Ident.fication Number.

QUESTION 3: A general repair shop operator knows that he can work on a vehicle with a straight pipe instead of a converter as long as he does not make contact with the tampered part. However, he is replacing a transmission and must disconnect the exhaust system from the engine in order to remove the old transmission and install a remanufactured unit. Is this legal? If so, what if the existing exhaust system breaks at the straight pipe due to corrosion as it is being removed? Does this force the technician to install a converter or can he replace the system exactly the way it came in since he had no intent to tamper with the exhaust?

ANSWER: Under federal law, catalytic converters may not be removed and replaced with "converter replacement pipes" by any person. Anyone who manufactures, sells or installs such pipes would violate section 203(a)(3)(b) of the Clean Air Act. If a vehicle comes into the shop with no converter and a test pipe in its place, and the section of pipe where the original catalytic converter should have been needs to be removed or replaced, a catalytic converter must be installed. If the straight pipe in place of the converter breaks as it is being removed, the system must be restored to its original certified configuration and a converter must be installed. Simply replacing the corroded test pipe with a new piece of pipe would be a violation of the tampering prohibition.

QUESTION 4: Are check valves, oxygen sensors and air tubes/Air Injection Reaction (AIR) manifolds covered by the 5 year/50,000 mile warranty?

ANSWER: Yes. The Design and Defect Warranty, section 207(a) of the Clean Air Act, covers these parts and would require the manufacturer to make all adjustments, repairs, and replacements to these parts in the event they became defective or caused the vehicle to fail to conform to applicable federal emission standards while the vehicle is under warranty.

QUESTION 5: If a vehicle, still covered under the 5/50 warranty, comes in for an exhaust system repair and the converter is missing, can the shop operator install a universal converter? Or must he install an original equipment unit? In addition, if the repair does not involve replacement of the pipe where the converter originally was located, can he replace components in back of the converter location?

ANSWER: Yes. If a vehicle still under warranty comes into a shop for exhaust system repairs, and the catalytic converter is missing, a universal converter may be installed. If the section of pipe where the original converter should have been needs to be replaced, the repair shop must install a catalytic converter. However, the repair of components behind the location where the converter should be, is permitted without having to install a replacement converter.

We appreciate the opportunity to respond to these questions and hope it helps clarify these matters for your readers. If we can be of further assistance, please let us know.

Sincerely,

/S/

Mary T. Smith
Director
Field Operations and Support Division

UNITED STATES ENVIRONMENTAL PROTECTION AGENCY
WASHINGTON, D.C. 20460

MAR 13 1991

OFFICE OF
AIR AND RADIATION

To whom may it concern:

As you know, the Clean Air Act was amended on November 15, 1990. Several of the changes in the Amendments affect the automotive repair/service industry directly. These changes include the expansion of the tampering prohibition to include private individuals and the prohibition against the manufacture, installation, sale or offering for sale of any part or component used on any motor vehicle or motor vehicle engine where a principal effect is to bypass, defeat, or render inoperative any emission control device or element of design of any emission control system.

The enclosed Fact Sheet: Exhaust System Repair Guidelines has been revised to conform to the new provisions of the Clean Air Act and represents a change in our enforcement policy with regard to exhaust repair. This change is effective immediately.

Essentially, the changes in these guidelines reflect EPA's position that any pipe used to replace the section of exhaust where the catalytic converter should be, would be considered illegal under the revised Clean Air Act. Therefore, any work in this area of the exhaust system must include proper converter replacement.

Other informational materials will be revised to reflect the Clean Air Act Amendments and will be distributed and made available when they are completed. These other materials include pamphlets on the tampering prohibition, revised engine switching fact sheet, and possibly a revision of our enforcement policy statement (Memorandum 1A) and/or guidance on which parts EPA considers to be illegal.

We would appreciate you informing your employees, members and/or associates about these changes. If there are questions or concerns, or if you have any suggestions concerning these issues, please let us know. Our phone number is (202) 233-9100.

Sincerely,

Mary T. Smith
Director
Field Operations and Support Division

Enclosure

UNITED STATES ENVIRONMENTAL PROTECTION AGENCY
WASHINGTON, D.C. 20460

MAR 13 1991

OFFICE OF
AIR AND RADIATION

FACT SHEET: EXHAUST SYSTEM REPAIR GUIDELINES

The EPA has prepared this fact sheet to answer some of the most commonly asked questions about the types of exhaust work a repair shop can legally perform. If you need any further information about the EPA's tampering policy, please call (202) 233-9100.

Question 1.

Under what conditions or circumstances can a catalytic converter be removed from a vehicle and a converter replacement pipe be installed?

Answer 1

Under federal law, catalytic converters may not be removed and replaced with "converter replacement pipes" by any person. The 1990 Clean Air Act Amendments even prohibit private individuals from installing "converter replacement pipes" on their own vehicles. Anyone who installs such pipes would violate section 203(a)(3)(A) and (B) of the Clean Air Act (Act).

In addition to federal law, forty-five out of the fifty States also have statutes or regulations which prohibit tampering with the pollution control equipment on motor vehicles or driving or selling such vehicles. Thus, vehicle owners who tamper with their own vehicles may be subject to substantial penalties under both federal and State law.

The only circumstances in which a person would be allowed to remove a converter is if the vehicle is being shipped overseas to an area where unleaded gasoline is not generally available. (Vehicles traveling to Canada or Mexico are not eligible for this exemption.) In this instance the vehicle owner must have a letter from the EPA specifically authorizing the converter removal from the vehicle in question.

Question 2.

Can I remove a converter from a vehicle that is used only for "off-road" driving?

Answer 2. No. The tampering prohibition discussed in Answer #1 applies to this situation as well. The federal tampering prohibition pertains to "motor vehicles," which are defined by section 216(2) of the Act as "any self-propelled vehicle[s] designed for transporting persons or property on a street or highway." A light-duty vehicle manufacturer certifies an engine-chassis configuration as meeting the applicable emissions standards for motor vehicles manufactured in a given model year, and it is not legal for anyone to "de-certify" a motor vehicle for "off-road" use.

Question 3.

A vehicle that has had its engine replaced is brought into a muffler shop. The owner says the new engine is pre-1975 and the vehicle no longer needs a converter. Is it tampering to remove the converter?

Answer 3. Yes. Again, the tampering prohibition in Answer #1 applies. A motor vehicle must be maintained in a proper certified engine-chassis configuration. In the case of engine switching, the resulting engine-chassis configuration must be identical in all material respects to one that was certified by the manufacturer for the same model year as the chassis or newer. It is not legal for anyone to change a vehicle into one that matches an older configuration than was certified by the manufacturer. Thus, removing the converter would be a violation of the law.

Question 4.

If a vehicle is brought into a muffler shop with a missing converter and a replacement pipe already installed, is it tampering to install a new replacement pipe?

Answer 4. Yes. Section 203(a)(3)(B) makes it illegal for any person to sell or to install any part where a principal effect would be to bypass, defeat, or render inoperative any device or element of design of a vehicle's emission control system. A principal effect of a replacement pipe is to defeat or bypass the catalytic converter system as it was designed by the manufacturer. It is, therefore, a prohibited act to install a replacement pipe in any situation. It is also a prohibited act to replace the entire exhaust pipe without replacing the catalytic converter. In

addition, a repair facility should consult with the State to determine if the State has a similar policy towards this type of repair work or how State laws may affect the legality of its actions.

Question 5.

If a converter-equipped vehicle is brought to a muffler shop with the converter already removed by the owner, is it tampering to install a section of pipe in the space left vacant by the converter's removal?

Answer 5. Yes. The installation by a muffler shop of a section of pipe in the void left where the vehicle owner removed the converter is considered by the Agency to be part of the act of tampering. It is a violation of section 203(a)(3)(A) for a vehicle owner to remove a converter from his own vehicle. Section 203(a)(3)(A) clearly prohibits all individuals from removing or rendering inoperative any emission control device or element of design. If a repair facility completes, assists, or participates in any way in this act of tampering begun by someone else, it has also acted in violation of section 203(a)(3)(A) of the Act and by installing a defeat device has violated section 203(a)(3)(B).

Question 6.

If a converter-equipped vehicle is brought into a muffler shop with no exhaust system past the exhaust manifold or headers, is it tampering to install a non-stock or dual exhaust system?

Answer 6. Yes. The answer to Question #5 applies. The repair facility would be completing the act of tampering in this situation by manufacturing, installing and selling an emission control defeat device.

Question 7.

Is it tampering to install a dual exhaust system on a vehicle originally equipped with a single exhaust?

Answer 7. Yes. The general rule is that a motor vehicle emission control system (which includes the exhaust configuration) may not be changed from an EPA certified configuration without subjecting the repair shop to liability for violating the federal tampering prohibition. The exhaust system configuration, including the location of the converters, and exhaust pipe diameter and length, are items specified by the manufacturer because engines and some of the associated emissions systems are generally affected by the exhaust system

backpressure, which subsequently affects vehicle emissions. The installation of a dual exhaust system with two converters would, therefore, be considered tampering. The Agency will not, however, require a repair shop to restore a vehicle which has a non-stock dual exhaust system to a single exhaust configuration. A shop may, therefore, replace sections of pipes on such a system, except for that portion of the pipes where the original catalytic converter would have been located. It would not be considered tampering to install a dual exhaust system with two converters if the vehicle manufacturer certified an identical engine-chassis configuration for the vehicle model year or newer that includes such an exhaust configuration.

Question 8.

Are there any general guidelines for muffler shops about the kind of exhaust work that can be legally performed on a previously tampered vehicle?

Answer 8. As the answers to the previous questions indicate, the Agency's authority to enforce against tampering violations has been greatly expanded. Individuals are now prohibited from tampering. Repair shops, therefore, must now restore vehicles' exhaust systems to their original catalyst configuration if they work on that part of the exhaust system. The Agency will not pursue enforcement action against repair shops that perform repairs on one part of a vehicle's exhaust system where tampering has occurred in another part of the system. The Agency does require, however, that when working on a vehicle where the catalytic converter has been removed, the repair shop must replace the catalytic converter if the section of pipe where the original converter should have been, needs to be replaced. This would also include situations where the entire exhaust pipe is replaced. Repair shops must install a catalytic converter when replacing the entire exhaust pipe.

We urge you to approach repair work cautiously and to consult with State officials concerning applicable State law. We have enclosed a chart that briefly summarizes the issues discussed in this fact sheet for use by any repair shop.

You should also be aware of the installation requirements applicable to aftermarket catalytic converters which comply with our August 5, 1986 interim policy. A copy of these requirements can be obtained by calling the phone number listed at the beginning of this fact sheet.

EXHAUST SYSTEM REPAIR GUIDELINES

Can the vehicle leave the shop in the following conditions?

Condition of exhaust vehicle entering shop	Stock exhaust with converter	Stock exhaust with test pipe	Dual exhaust with converters	Dual without converters
Stock exhaust with converter	Yes	No	No	No
Stock exhaust, no converter, test pipe in its place	Yes	No	No	No
Stock exhaust, no converter, gap in exhaust system (no test pipe)	Yes	No	No	No
No exhaust system past manifold or headers	Yes	No	No	No
Dual non-stock exhaust with no converters	Yes	No	Yes***	No
Dual non-stock exhaust with converters	Yes	No	Yes***	No

*** The Agency has exercised its enforcement discretion by not pursuing enforcement action against facilities for this type of repair work, although it could be considered tampering. Please consult with State officials regarding applicable State laws. Shops are encouraged to convince the vehicle owner to restore the exhaust system back to its original configuration.

3/91

Supplemental Information 3

U.S. EPA's Memorandum No. 1A and Addendum

UNITED STATES ENVIRONMENTAL PROTECTION AGENCY
WASHINGTON, D.C. 20460

OFFICE OF ENFORCEMENT AND COMPLIANCE ASSURANCE

September 4, 1997

Addendum to Mobile Source Enforcement Memorandum 1A

SUBJECT: Tampering Enforcement Policy for Alternative Fuel Aftermarket Conversions

A. Purpose The purpose of this document is to clarify and revise the U.S. Environmental Protection Agency's (EPA's) "tampering" enforcement policy for motor vehicles and motor vehicle engines originally designed to operate on gasoline or diesel fuel and subsequently modified to operate exclusively or in conjunction with compressed natural gas (CNG) or liquified petroleum gas (LPG or propane), hereinafter referred to as "alternative fuels". The provisions of this Addendum shall apply to all persons subject to the tampering prohibition of Section 203(a) of the Act. For the purpose of this policy Addendum, the term "manufacturer" will apply to any person who designs, produces, and/or assembles components for converting vehicles or engines to operate on alternative fuels and is responsible for complying with all applicable requirements of this policy Addendum.

B. Background: EPA's policy is and has been that any alteration from an original configuration of a vehicle or engine as certified under Title II of the Act may constitute tampering under Section 203(a)(3). Routine maintenance and repair of vehicles and engines requires the use of replacement parts which may be non-original or "aftermarket" parts or systems. EPA's Office of Enforcement and General Counsel issued Mobile Source Enforcement Memorandum 1A (Memo 1A) on June 25, 1974 to provide guidance to covered parties regarding how the Agency intended to enforce the "tampering" prohibition under Section 203(a)(3) of the Clean Air Act (Act) with respect to maintenance and the use of aftermarket parts.

Memo 1A provides, in part, that the use of an aftermarket part, alteration or add-on part will not constitute tampering if the dealer has a "reasonable basis" to believe that such acts will not adversely affect emissions performance. It also provides specific procedures or options by which the dealer would have a "reasonable basis". One available procedure is emissions testing performed in accordance with "40 CFR 85" (subsequently revised and incorporated under 40 CFR Part 86) demonstrating compliance with emission standards for the useful life of the vehicle or engine. An alternate option is that "a Federal, state or local environmental control agency represents that a reasonable basis exists" based on testing done in accordance with

procedures specified by that agency. Many vehicles converted from gasoline fueled to CNG or propane have relied on the second option utilizing procedures established by California or Colorado for demonstrating emissions compliance.

EPA has recently become aware of federal emission test data generated under a program conducted by the National Renewable Energy Laboratory (NREL) which indicate that a significant number of these vehicles modified to run on alternative fuels may be exceeding one or more applicable federal emission standards. The installers involved in the NREL program had attempted to comply with Memo 1A by using conversion systems certified by the state of California under the "California Exhaust Emission Standards and Test Procedures for Systems Designed to Convert Motor Vehicles Certified for 1993 and Earlier Model Years to Use Liquefied Petroleum Gas or Natural Gas Fuels" (pre-1994 California Procedures). EPA has subsequently reviewed emission test data from other sources which generally substantiate the NREL results.

In response to concerns raised by these data, the Agency conducted a public stakeholders meeting on February 21, 1997, with representatives of the affected industries, regulatory agencies and interested fleet operators. The purpose of the meeting was to discuss these data and the causes of the emission failures as well as to explore all available options to identify and remedy the problems. Many reasons were provided for the emission problems, including inadequate initial testing, insufficient durability evaluations, overly broad vehicle application based on limited testing, inadequate systems/parts specifications, improper installation and fuel variability. The concerns of the affected industries and fleets subject to several alternative fuel statutory mandates were also discussed.

The most significant conclusion reached at that meeting, and from extensive data review and discussions subsequent to that meeting, was that the pre-1994 California and Colorado procedures as currently structured do not provide an adequate demonstration or assurance that a vehicle or engine modified to operate on an alternative fuel using an aftermarket conversion system will comply with the applicable emission standards for its useful life. As a result of the above and in light of the number of vehicles and engines that may be converted to alternative fuels in the near future, EPA believes it is appropriate to issue this Addendum to Memo 1A (this Addendum) to provide additional guidance to the regulated community, including manufacturers and installers of alternative fuel conversion systems.

C. <u>Revised Policy:</u> Effective immediately, EPA will no longer accept a representation based on the pre-1994 California Procedures for alternative fuel conversion systems or on the test procedures under Colorado Regulation No. 14 in effect prior to the date of this Addendum as a "reasonable basis" under paragraph 3(c) of Memo 1A. Consequently, any future installation of an alternative fuel conversion system, or the modification of any motor vehicle or motor vehicle engine in compliance with Title II of the Clean Air Act to operate exclusively or in part with an alternative fuel, or the causing thereof, may constitute tampering under Section 203(a) of the Act, where the installer or manufacturer has relied exclusively on a representation by Colorado or California, as described above, that a reasonable basis exists in accordance with paragraph 3(c) of Memo 1A. Effective immediately, the "reasonable basis" under paragraph 3 of Memo 1A that EPA agrees may be relied on by any person, including a manufacturer, installer or operator, when

converting, or causing the conversion of, a motor vehicle or motor vehicle engine to operate on an alternative fuel is limited to one of the three options listed below.

1. A Federal Certificate under 40 CFR Part 86 demonstrating compliance with the applicable standards or under 40 CFR Part 88 demonstrating compliance with Clean Fuel Fleet standards for each engine family to be converted in accordance with 40 CFR Part 85, Subpart F; or

2. A Retrofit System Certification under the "California Certification and Installation Procedures For Alternative Fuel Retrofit Systems for Motor Vehicles Certified for 1994 and Subsequent Model Years" for a conversion system installed and tested under the above procedures on a vehicle or engine from a "50-state engine family" for use nationwide, or for a conversion system installed and tested under the above procedures on a vehicle or engine from a "California engine family" for use in California only; or

3. Until December 31, 1998, the use of an alternative fuel conversion system designed, tested and installed on a single engine family, or multiple engine families as provided under paragraph b.(4) below, if testing is completed by March 31, 1998, as follows:

a. With the alternative fuel conversion system installed on the certified engine family, the manufacturer shall perform, or cause the performance of, one federal emission test while operating with the alternative fuel and one test with the original certification fuel, if dual fuel operation is retained, in accordance with the applicable test procedures under 40 CFR Part 86 or Part 88 for that class and model year vehicle or engine. Prior to testing, the vehicle or engine shall be operated with the conversion system installed for at least the number of miles or hours equal to the service accumulation period needed to stabilize the emission control system specified by the original manufacturer in its certificate application submitted to EPA. EPA encourages manufacturers to conduct at least one baseline emission test with the certification fuel prior to conversion to ascertain that the vehicle or engine meets the applicable standards.

b. (1) With the application of an appropriate deterioration factor (DF) to the above test results, the vehicle or engine shall meet the applicable federal exhaust emission standards to which the vehicle or engine was originally certified. The DF shall be determined either based on full useful life durability testing, predictions based on engineering judgement for a similar light duty vehicle or heavy-duty engine with a similar emission control system using the same alternative fuel conversion system, or determined in accordance with the appropriate protocol contained in the "Dear Manufacturer" letter of September 27, 1995 - Assigned Deterioration Factors for Gaseous-Fueled Vehicles and Engines, identified as CD-95-14. For heavy-duty engines with aftertreatment (such as a catalyst), the deteriorated emissions are calculated by *multiplying* the DF with the exhaust emission results. For heavy-duty engines without aftertreatment, the deteriorated emissions are calculated by *adding* the DF with the exhaust emission results. For a vehicle or engine converted and tested prior to accumulating 50% of its useful life, the manufacturer shall apply the full DF. For a vehicle or engine

converted and tested subsequent to accumulating 50% of its full useful life, apply a DF that is the midway point between no DF and the full DF. For example, an additive DF of 1.0 may become 0.5 and a multiplicative DF of 2.0 may become 1.5. For a vehicle or engine converted and tested subsequent to accumulating its full useful life, apply no DF.

(2) For heavy-duty engines used in vehicles with a gross vehicle weight rating (GVWR) less than or equal to 10,000 lbs, the manufacturer may demonstrate compliance with the applicable light-duty truck standards in accordance with the preceding paragraph.

(3) In lieu of engine dynamometer testing for on-highway heavy duty vehicles with a GVWR less than or equal to 14,000 lbs, the manufacturer may conduct two or three emission tests as described below in accordance with the most current amendments to "California Exhaust Emissions Standards and Test Procedures for 1988 and Subsequent Model Passenger Cars, Light-Duty Trucks and Medium-Duty Vehicles". These shall consist of one baseline test using the certification fuel prior to conversion, one test after conversion with the alternative fuel and one test after conversion with the certification fuel if the vehicle is intended to be dual fuel. The two tests after conversion shall not result in any exhaust emissions that exceed 1.10 times any of the baseline emission levels. In the case of pure CNG operation, the after conversion NMHC emissions shall not exceed 0.9 times the THC emissions before conversion. For heavy-duty vehicles operating on a mixture of CNG and either diesel fuel or gasoline, the conversion system manufacturer should contact EPA's Mobile Source Enforcement Branch to determine the appropriate ratio of NMHC emissions after conversion to THC emissions before conversion.

(4) With respect to light duty vehicles, light duty trucks, or heavy-duty engines meeting the requirements of paragraph (2) above, the above demonstration may be applied as a reasonable basis for up to a maximum of three additional light duty engine families to that tested, provided:

A. The results from testing done in accordance with the above procedures demonstrate compliance with low emission vehicle (LEV) or more stringent emission standards under 40 CFR § 88.104,

B. The additional engine families have engine displacements equal to, or within 0.8 liters (50 CID) less than, the engine tested,

C. The additional engine families comprise vehicles equal to or less than the gross vehicle weight of the vehicles covered by the engine family tested, and

D. The additional engine families are equipped with the same catalytic converter type (i.e. beaded vs monolith, OC vs OC/RC) and the same primary emission control technology (eg. EGR, Air Injection, EFI vs carburetor, closed loop vs open loop) as the engine

family tested.

(5) Option 3 of this policy is not available for conversion of California only engine families.

(6) An alternative fuel conversion system that degrades a closed loop feedback system to a continuous non-feedback open loop system is not allowed under this option.

(7) Compliance with this policy may be demonstrated based on existing data provided such data are the result of testing in accordance with the procedures and protocols specified herein.

(8) Demonstration with the Cold CO requirements under 40 CFR Part 86 Subpart C is not required under Option 3 of this policy.

(9) The Certification Short Test requirements under 40 CFR Part 86, Subpart O is not required under Option 3 of this policy.

(10) The evaporative emissions requirements under 40 CFR 86.094-8(b) and 86.094-9(b) are not required under Option 3 of this policy.

c. The manufacturer of the conversion system shall specify all part numbers/calibrations associated with that conversion system and provide all such information, specifications and installation requirements, including a permanent conversion system label which appropriately identifies the conversion system with reasonable specificity, with each system that is sold or provided for installation.

d. In order to demonstrate that it has a reasonable basis to believe that its conversion system will not adversely affect emissions over the useful life of the vehicle or engine, the conversion system manufacturer should retain records including but not limited to all emission test data, including test results, description of vehicles and/or engines modified, all maintenance and modifications performed, laboratory data sheets, identification of test laboratory, test dates, test personnel and test procedures followed, engine families tested, data to support additional engine family coverage, if applicable, VIN's, vehicle and engine mileage and/or age as applicable, fuel specifications, conversion system part numbers and calibrations, durability procedures followed including all durability data and all calculations and engineering analyses performed to determine compliance with the above requirements.

e. In order to meet the requirements of this policy, any installation of a conversion system designed and tested in accordance with the above shall be done in accordance with the applicable part numbers/calibrations installed on the vehicle or engine that was tested, completed in accordance with manufacturer's specifications and/or instructions and the

conversion system label affixed to the vehicle or engine. The system shall only be installed on a vehicle or engine of the same engine family as that tested or as permitted under paragraph 3.b.(4) above.

f. In support of an appropriate installation, the installer should retain records of each vehicle or engine converted in accordance with the above, including the VIN, make and year of each vehicle or engine so modified, the name of the installer, the date of installation and a copy of the manufacturer's or marketer's/distributor's representation that the conversion system has been demonstrated on that engine family to meet the requirements of this policy

g. In support of any marketer's or distributor's compliance with the requirements of this policy, such parties should retain records of each conversion system sold or distributed, copies of the representation from the manufacturer that the system meets this policy and records of sales to others including the name of the purchasers, part numbers, dates of sales and the numbers of systems sold.

h. Colorado has indicated that it will revise its administrative procedures under Colorado Regulation No. 14 to require that conversion system manufacturers conduct testing in accordance with option 3 of this Addendum in order to receive a Colorado Letter of Certification. Consequently, until December 31, 1998, EPA will not consider as tampering the sale and installation of a conversion system in Colorado pursuant to a Colorado Letter of Certification issued after the above-referenced administrative procedure revisions have been made by Colorado, provided testing in support of the Letter of Certification is done in accordance with option 3 of this Addendum and is completed by March 31, 1998.

D. Conclusion: EPA believes that the maximum degree of assurance that vehicles or engines modified to operate on alternative fuels will meet emissions standards throughout their useful life can only be achieved through full certification demonstration in accordance with 40 CFR Parts 86 or 88. However, the cost and time associated with such a demonstration may be prohibitive for some conversion system manufacturers in the short term and may not provide sufficient equipment for fleets currently subject to various alternative fuel mandates to comply with those mandates. In addition, EPA will be attempting to implement various procedures to streamline federal certification for alternative fuel vehicles and on-highway engines, but it is likely that implementation of those procedures will take some time. In the interim, the procedures and requirements outlined in option 3 above should allow alternative fuel conversion systems to be developed and evaluated more quickly and at less cost, while providing a reasonable assurance that emissions will not be deteriorated. After December 31, 1998, manufacturers, marketers and installers must utilize equipment which meets the requirements of option 1 or option 2 above to be covered by the non-tampering policy of Memo 1A.

EPA will be reviewing Memo 1A more thoroughly in the near future to determine if additional changes are required for other vehicle or engine modifications, parts or systems. Any questions regarding this interim policy should be directed to the Mobile Source Enforcement

Branch at (202) 564-2255.

/s/

Bruce C. Buckheit, Director
Air Enforcement Division
Office of Enforcement and Compliance Assurance

UNITED STATES ENVIRONMENTAL PROTECTION AGENCY
WASHINGTON, D.C. 20460

Office of Enforcement and General Counsel

June 25, 1974

Mobile Source Enforcement Memorandum No. 1A

SUBJECT: Interim Tampering Enforcement Policy

A. Purpose

The purpose of this Memorandum is to state the interim policy of EPA with regard to enforcement of the "tampering" prohibition--Section 203(a)(3)--of the Clean Air Act. This Memorandum cancels and supersedes Mobile Source Enforcement Memorandum No. 1 of December 22, 1972.

Section 203(a)(3) of the Clean Air Act provides:

"The following acts and the causing thereof are prohibited--

(3) for any person to remove or render inoperative any device or element of design installed on or in a motor vehicle or motor vehicle engine in compliance with regulations under this title prior to its sale and delivery to the ultimate purchaser, or for any manufacturer or dealer knowingly to remove or render inoperative any such device or element of design after such sale and delivery to the ultimate purchaser."

Section 205 of the Act provides for a maximum civil penalty of $10,000 for any person who violates Section 203(a)(3).

2. This "tampering" provision of the law has created a great deal of uncertainty, primarily among new vehicle dealers and automotive aftermarket parts manufacturers, regarding what actions and/or use of what parts are prohibited. The terms "manufacturer" and "dealer" in 203(a)(3) refer only to motor vehicle and engine manufacturers and new motor vehicle dealers; however, the law impacts indirectly on aftermarket parts manufacturers through its applicability to vehicle dealers who are customers for their products. Other provisions in the Act establishing manufacturer warranties and authorizing compulsory recall of properly maintained vehicles also have a potential for anti-competitive effects in the aftermarket.

3. In general, it is clear that EPA's primary objective in enforcing the statutory prohibition on "tampering" must be to

assure unimpaired emission control of motor vehicles throughout their useful life. It is EPA's policy to attempt to achieve this objective without imposing unnecessary restraints on commerce in the automotive aftermarket.

4. The long range solution to minimizing possible anti-competitive effects that could result from implementation of these statutory provisions may lie in some type of certification program for at least certain categories of aftermarket parts. EPA is currently studying the technical, administrative and legal problems which such a program presents. EPA has yet to develop the policy, procedures, or facilities attendant to any long range solution.

5. In the absence of a long-term solution, and in the absence of proof that use of nonoriginal equipment parts will adversely affect emissions, constraining dealers to the use of only original equipment parts would constitute an unwarranted burden on commerce in the automotive aftermarket. Pending development of a long range solution, the following statement reflects EPA's interim policy in the tampering area. This policy is intended to reduce the uncertainty which dealers now face by providing criteria by which dealers can determine in advance that certain of their acts do not constitute tampering.

6. New vehicle and engine manufacturers have also requested that they be treated, in their aftermarket parts role, similarly to other aftermarket parts manufacturers. Memorandum No. 1 was intended to avoid unnecessary adverse impacts on all aftermarket manufacturers; this revision, therefore, makes it clear that EPA's interim policy extends to vehicle and engine manufacturers.

B. Interim Policy

1. Unless and until otherwise stated, the Environmental Protection Agency will not regard the following acts, when performed by a dealer, to constitute violations of Section 203(a)(3) of the Act:

(a) Use of a nonoriginal equipment aftermarket part (including a rebuilt part) as a replacement part solely for purposes of maintenance according to the vehicle or engine manufacturer's instructions, or for repair or replacement of a defective or worn out part, if the dealer has a reasonable basis for knowing that such use will not adversely affect emissions performance; and

(b) Use of a nonoriginal equipment aftermarket part or system as an add-on, auxiliary, augmenting, or secondary part or system, if the dealer has a reasonable basis for knowing

that such use will not adversely affect emissions performance; and

(c) Adjustments or alterations of a particular part or system parameter, if done for purposes of maintenance or repair according to the vehicle or engine manufacturer's instructions, or if the dealer has a reasonable basis for knowing that such adjustment or alteration will not adversely affect emissions performance.

2. For purposes of clause (la), a reasonable basis for knowing that a given act will not adversely affect emissions performance exists if:

(a) the dealer reasonably believes that the replacement part or rebuilt part is designed to perform the same function with respect to emission control as the replaced part, or

(b) the replacement part or rebuilt part is represented in writing by the part manufacturer to perform the same function with respect to emission control as the replaced part.

3. For purposes of clauses (lb) and (lc), a reasonable basis for knowing that a given act will not adversely affect emissions performance exists if:

(a) the dealer knows of emissions tests which have been performed according to testing procedures prescribed in 40 CFR section 85 showing that the act does not cause similar vehicles or engines to fail to meet applicable emission standards for their useful lives (5 years or 50,000 miles in the case of light-duty vehicles); or

(b) the part or system manufacturer represents in writing that tests as described in (a) have been performed with similar results; or

(c) a Federal, State or local environmental control agency expressly represents that a reasonable basis exists. (This provision is limited to the geographic area over which the State or local agency has jurisdiction).

4. For purposes of clauses (la), (lb), and (lc):

(a) except when necessarily done in conjunction with acts under l(b)or l(c) which EPA does not consider to constitute violations of Section 203(a)(3), the permanent removal or disconnecting or blocking of any part of the

original system installed primarily for the purpose of controlling emissions will be presumed to adversely affect emission performance; and

(b) the proscription and appropriate publication by EPA of an act as prohibited will be deemed conclusive that such act will adversely affect emissions performance.

C. Discussion

1. Clause (la) will apply to new or rebuilt replacement parts, protecting the dealer when he uses such a part to conduct necessary maintenance if a person familiar with the design and function of motor vehicles and engines would reasonably believe that such a part is designed to perform the same function as the replaced part, or if there is written representation by the parts manufacturer that the part is so designed. Other reasonable bases (e.g., emissions test showing no adverse effect) may exist, but these other bases will probably not occur often in the replacement part context. If EPA gains information that certain replacement parts do adversely affect emissions, a listing of such parts will be published.

2. Clause (1b) will protect the dealer who installs add-on parts if he knows, or if it has been represented in writing to him by the part manufacturer, that emissions tests have been performed according to Federal procedures which show that such a part will not cause similar vehicles to fail to meet applicable emission standards over the useful life of the vehicle. The dealer is protected from prosecution even if the test results have not been reported to EPA. However, the aftermarket parts manufacturer who represents that such tests have been conducted should have available the data from the tests, including where, when, how and by whom the tests were conducted should EPA request it. Such add-on parts might be auxiliary fuel tanks, which would require evaporative emission control on light-duty vehicles to the prescribed standard, or superchargers, which would require emission testing showing conformance to standards over the useful life of the vehicle or engine. Clause (lb) will also protect the dealer who installs retrofit devices to reduce emissions at the request of a State or local environmental control agency.

3. Clause (lc) applies to dealers performing necessary adjustments or alterations, according to the vehicle or engine manufacturer's instructions, of parts already on the vehicle or engine, e.g., adjustment of the carburetor or ignition timing. It also covers adjustments or alterations, as in the case of altitude "fixes", if a"reasonable basis" exists as described above.

4. This interim policy provides general guidance to dealers as to those acts which do not constitute tampering and those acts which may constitute tampering. It also allows aftermarket parts manufacturers an opportunity to protect their markets by providing dealers with assurance that their parts do not cause emissions standards to be exceeded. Vehicle and engine manufacturers also often function as aftermarket parts manufacturers. For example, many vehicle and engine manufacturers provide aftermarket parts for the in-use vehicles and engines of other manufacturers as well as for their own in-use vehicles and engines. In their aftermarket parts role, vehicle and engine manufacturers may take the same steps (set forth in this memorandum) as parts manufacturers who are not also vehicle or engine manufacturers to provide dealers with assurances that they are not in violation section 203(a)(3). However, in their role as vehicle or engine manufacturers, procedures exist whereby they may obtain approval for any emission related change in a vehicle or engine from its certified configuration or parameters (See MSAPC Advisory Circulars No. 2-B "Field Fixes Related to Emission Control-Related Components" and No. 16-2 "Approval of Emission Control Modifications for High Altitude on New Light Duty Motor Vehicles", March 5, 1974). This Memorandum does not relieve vehicle or engine manufacturers from complying with the procedures set forth in the advisory circulars except in their specific function as aftermarket parts manufacturers.

5. Any questions regarding this interim policy should be addressed to the Mobile Source Enforcement Division (EG-240), Office of Enforcement and General Counsel.

Norman D. Shulter, Director
Mobile Source Enforcement Division
Office of Enforcement and General Counsel

Supplemental Information 4

U.S. EPA's Engine Switching Fact Sheet

UNITED STATES ENVIRONMENTAL PROTECTION AGENCY
WASHINGTON, D.C. 20460

ENGINE SWITCHING FACT SHEET

UNITED STATES ENVIRONMENTAL PROTECTION AGENCY
WASHINGTON, D.C. 20460
March 13, 1991
OFFICE OF AIR AND RADIATION

Pursuant to frequent requests for information received by the U.S. Environmental Protection Agency (EPA) regarding the legality and effects of engine switching, this document will summarize federal law and policy pertaining to this matter, and will discuss other related issues.

A. Federal Law

The federal tampering prohibition is contained in section 203(a)(3) of the Clean Air Act (Act), 42 U.S.C. 7522(a)(3). Section 203(a)(3)(A) of the Act prohibits any person from removing or rendering inoperative any emission control device or element of design installed on or in a motor vehicle or motor vehicle engine prior to its sale and delivery to an ultimate purchaser and prohibits any person from knowingly removing or rendering inoperative any such device or element of design after such sale and delivery, and the causing thereof. The maximum civil penalty for a violation of this section by a manufacturer or dealer is $25,000; for any other person, $2,500. Section 203(a)(3)(B) of the Act prohibits any person from manufacturing or selling, or offering to sell, or installing, any part or component intended for use with, or as part of, any motor vehicle or motor vehicle engine where a principal effect of the part or component is to bypass, defeat, or render inoperative any device or element of design installed on or in a motor vehicle or motor vehicle engine, and where the person knows or should know that such part or component is being offered for sale or is being installed for such use. The maximum civil penalty for a violation of this section is $2,500.

EPA received many questions regarding the application of this law to a situation where one engine is removed from a vehicle and another engine is installed in its place. EPA's policy regarding "engine switching" is covered under the provisions of Mobile Source Enforcement Memorandum No. lA (Attachment 1). This policy states that EPA will not consider any modification to a "certified configuration" to be a violation of federal law if there is a reasonable basis for knowing that emissions are not adversely affected. In many cases, proper emission testing according to the Federal Test Procedure would be necessary to make this determination.

A "certified configuration" is an engine or engine chassis design which has been "certified" (approved) by EPA prior to the production of vehicles with that design. Generally, the manufacturer submits an application for certification of the designs of each engine or vehicle it proposes to manufacture prior to production. The application includes design requirements for all emission related parts, engine calibrations, and other design parameters for each different type of engine (in heavy-duty vehicles), or engine chassis combination (in light-duty vehicles). EPA then "certifies" each acceptable design for use, in vehicles of the upcoming model year.

For light-duty vehicles, installation of a light-duty eng~ne into a different light-duty vehicle by any person would be considered tampering unless the resulting vehicle is identical (with regard to all emission related parts, engine design parameters, and engine calibrations) to a certified configuration of the same or newer model year as the vehicle chassis, or if there is a reasonable basis for knowing that emissions are not adversely affected as described in Memo 1A. The appropriate source for technical information regarding the certified configuration of a vehicle of a particular model year is the vehicle manufacturer.

For heavy-duty vehicles, the resulting vehicle must contain a heavy-duty engine which is identical to a certified configura- tion of a heavy-duty engine of the same model year or newer as the year of the installed engine. Under no circumstances, however, may a heavy-duty engine ever be installed in a light-duty vehicle.

The most common engine replacement involves replacing a gasoline engine in a light-duty vehicle with another gasoline engine. Another type of engine switching which commonly occurs, however, involves diesel powered vehicles where the diesel engine is removed and replaced with a gasoline engine. Applying the above policy, such a replacement is legal only if the resulting engine-chassis configuration is equivalent to a certified configuration of the same model year or newer as the chassis. If the vehicle chassis in question has been certified with gasoline, as well as diesel engines(as is common), such a conversion could be done legally.

Another situation recently brought to EPA's attention involves the offering for sale of used foreign-built engines. These engines are often not covered by a certified configuration for any vehicle sold in this country. In such a case, there is no way to install such an engine legally. EPA has recently brought enforcement actions against certain parties who have violated the tampering prohibition by performing illegal engine switches.

It should be noted that while EPA's policy allows engine switches as long as the resulting vehicle matches exactly to anv certified configuration of the same or newer model year as the chassis, there are some substantial practical limitations to performing such a replacement. Vehicle chassis and engine designs of one vehicle manufacturer are very distinct from those of another, such that it is generally not possible to put an engine into a chassis of a different manufacturer and have it match up to a certified

configuration. Therefore, practical considerations will generally limit engine switches to installation of another engine which was certified to be used in that same make and model (or a "twin" of that make and model, e.g., Pontiac Grand Am and Oldsmobile Calais). In addition, converting a vehicle into a different certified configuration is likely to be very difficult, and the cost may prove prohibitive.

B. State Laws

Many states also have statutes or regulations prohibiting tampering in general. Most of these laws specifically prohibit tampering by individuals. A few specifically prohibit engine switching, using provisions similar to those stated in EPA's policy. To determine the state law in any given state, the state's Attorney General's office should be contacted. In addition, many states have state or local antitampering inspection programs which require a periodic inspection of vehicles in that area, to determine the integrity of emission control systems. Many programs have established policies for vehicles which have been engine switched. While EPA does not require these programs to fail engine switched vehicles which are not in compliance with federal policy, the Agency does strongly recommend that these programs set their requirements so as to be consistent with the federal law. State or local programs which pass illegally engine switched vehicles may mislead federally regulated parties into believing that engine switching is allowed by federal law.

Supplemental Information 5

U.S. EPA's Kit Car Policy

U.S. EPA Kit Car Policy

The following represents a clarification of EPA=s policy concerning the regulation of imported and domestically produced kit cars and kit car packages. Kit vehicles are understood by EPA to typically involve new bodies, used drivetrains and new or used chassis. Used components may or may not be refurbished. This policy applies to kits or assembled kit cars only. This policy does not apply to regular production vehicles offered for importation into or produced in the United States.

1. Fully-assembled kit cars are Amotor vehicles@ under the Clear Air Act. Complete kit car packages are also Amotor vehicles@ under the Clean Air Act. These are packages which contain all of the major components needed for assembly (i.e., body, chassis, engine and transmission). As Amotor vehicles@ they are subject to all applicable emission regulations. If an assembled kit car or complete kit car package is offered for importation and the kit is not covered by an EPA certificate of conformity issued to an original equipment manufacturer, an EPA Form No. 3520-1 must be filed at the port of entry and the vehicle must be imported by an Independent Commercial Importer (ICI) eligible to import such vehicles or kits. The ICI then must ensure that the vehicle or kit complies with all applicable emission requirements.
2. An assembled kit car or complete kit car package which meets the following guidelines will be considered to be a rebuilt vehicle of a previously certified configuration and will be considered to be covered by that configuration=s original EPA certificate of conformity.
    A. The components of the drivetrain (engine, transmission, differential) must be exclusively or substantially used and/or rebuilt. <u>Regardless of the combination of new and used components, the engine must be used or used and rebuilt</u>. The engine block and cylinder head(s) must be used, other components of the engine may be new. AUsed@ means the component has been in a vehicle that has been titled to an ultimate purchaser. A rebuilt component is defined as a used component which has been refurbished with new or other used parts.
    B. All emission-related components and settings must conform in all material respects to those of one previously certified configuration. Therefore, all part numbers for the emission-related components of a fully assembled kit vehicle or complete kit car package must match or be traceable to the numbers specified in the application for certification of a previously certified configuration.
    C. Consistent with EPA Advisory Circular (AC) 64, which deals with modifications performed before sale to the ultimate purchaser, the vehicle weight of the kit configuration can be no more than 500 pounds greater than the weight of the originally certified configuration.
    D. All catalytic converters, oxygen sensors, and charcoal canisters must be new, original equipment parts.
    E. Kit vehicles must: (1) have the same transmission configuration (i.e., manual, automatic, semi-automatic, number of forward gears, and shift calibration) as the originally certified configuration; and (2) consistent with AC 17F, have an N/V ratio (speed of vehicle in miles per hour/speed of

engine in revolutions per minute) which matches the N/V ratio of the originally certified configuration within three (3) percent in every gear.*

*The Agency would consider minor variations to these limitations upon an appropriate demonstration that the altered configuration will meet Federal emission requirements.

F. Each vehicle and its accompanying documentation must be clearly labeled as to the make, model year, engine family, subfamily, and tune-up specifications represented by the originally certified vehicle.

G. If the originally certified configuration required unleaded fuel, then the vehicles must have fuel filler neck restrictors and unleaded fuel labels which meet the requirements of 40 CFR 80.24.

3. The production, sale and importation of automotive bodies alone (i.e., no chassis, engine or transmission) are not regulated by EPA since such units are not considered Amotor vehicles@ under the Clean Air Act. EPA form 3520-1 is not required for imported automotive bodies. A motor vehicle from which the engine has been removed is still a motor vehicle and is not considered a body.

4. The production, sale and importation of vehicle parts (engines, transmissions, chassis, vehicle bodies, etc.) are not regulated by EPA because parts are not considered motor vehicles under the Clean Air Act. However if the parts constitute a disassembled vehicle or an approximate disassembled vehicle, the combination is considered a motor vehicle under the Clean Air Act or the Imports regulations will be considered a violation of the Clean Air Act and will be strictly enforced. An example of such circumvention is:

   A kit car maker who also provides the engine and transmission before or after production/importation of the body/chassis.

5. AMotor vehicles@ must comply with the Clean Air Act and may not be disassembled nor purchased in a disassembled form for the purposes of evading the Clean Air Act or the Imports regulations. In these situations the kit car body/chassis combination must be certified by the manufacturer, must be in a configuration which was previously certified by EPA subject to the guidelines discussed at A2" above or, in the case of an importation, an EPA form 3520-1 must be filed at the port of entry and the vehicle imported by an eligible ICI who must ensure that the kit car body/chassis complies with all applicable emission requirements. At the present time, there are no ICIs eligible to import kit cars.

6. Except with regard to kit vehicles meeting the guidelines at A2" above; an individual or firm that assembles kits for hire or resale, that produces assembled kit cars for resale or that produces complete kit car packages for resale will be considered to be a manufacturer of new motor vehicles under the Clean Air Act. Such manufacturers and their vehicles are subject to all applicable regulations under the Act including civil penalties of up to $25,000 per vehicle for each new motor vehicle distributed in commerce, sold, offered for sale, or introduced, or delivered for introduction, into commerce, unless such vehicle is covered by a certificate of conformity issued by EPA.

Section IX

Appendices 1-15

Appendix 1

Ohio EPA Complaint Report

Appendix 1

Complaint Account

Anti-Tampering Program
Ohio EPA, DAPC/MSS

Date:_____/_____/_____ Received by / from:_____/_____

Complainant Information:

Name:_____ Phone:(_____)_____

Street Address:_____

City:_____State:_____ Zip Code:_____

Does complainant wish to remain anonymous? yes / no / doesn=t matter (circle)

Does complainant wish to be informed of the inspection findings? yes / no (circle)

Referral Caller Information:

Name:_____ Phone:(_____)_____

Street Address:_____

City:_____State:_____ Zip Code:_____

Information on Facility or Individual:

Name:_____ Phone:(_____)_____

Street Address:_____

City:_____State:_____ Zip Code:_____

Type of Facility: dealership / repair shop / muffler shop / individual (circle)

Relationship to Facility:_____

Information on Vehicle

Year:_____ Make:_____ Model:_____ Plate:_____

VIN:_____

Description of Complaint: (include purchase/repair date, previous owners, facilities that have performed repairs, etc.)

Appendix 2

Ohio EPA Vehicle Inspection Form

Ohio EPA Vehicle Inspection Form

Date:____/____/_____Time:_____AM/PM County:_____

Investigator Name(s):_____

Repair Facility Information

Facility Name:_____

Street:_____ City:_____, OH _____

Contact Name(s):_____ Invoice Number:_____

Vehicle and Vehicle Owner Information

Owner's Name(s):_____

Street:_____ City:_____, OH _____

Phone #:_____-_____-_____ Make/Model/Year:_____/_____/_____

VIN#:_____ Plate #:_____

GVWR:_____ Mileage:_____

Transmission: (Manual or Automatic) Air Conditioning: (Yes / No) New / Used / Demo

Date / Place Purchased:_____/_____/_____Place:_____

Photos Taken: (Yes / No) Comments:_____

_____

Emission Controls

PCV	TAC	AIR	EEC	O2	EGR	FIR	CAT	EXHT

Description of Tampering

Appendix 3

Statement Form

Statement

I, _____, HEREBY STATE, UNDER PENALTY OF PERJURY PURSUANT TO 28 U.S.C. §1746, THE FOLLOWING:

I HAVE READ THIS DOCUMENT AND AGREE THAT IT IS COMPLETE, TRUTHFUL, AND FACTUALLY ACCURATE IN ALL REGARDS TO THE BEST OF MY KNOWLEDGE AND BELIEF.

Date:_____/_____/_____ Location:_____

_____
(affiant)

_____
(witness)

Appendix 4

Aftermarket Converter Checklist, Fact Sheet, and U.S. EPA to MECA Letter re: OBD II

Appendix 4

REC'D BY AIM SECTION, OEPA
94 MAR 14 AM 7:03

(Hmy) NOSS R.

Companies that have submitted data demonstrating Compliance with EPA policy (New Converters)

Company	Date	Type Catalyst	Efficiency HC	Efficiency CO	Efficiency NO_x	Coverage Weight	Coverage Engine	Manuf. Code	Part#
Tri-D Automotive (419) 734-1316 (800) 533-5014	1/06/87	TW + OC	84.7 79.9	89.5 88.5	51.8 44.7	4000	5.0 1	TD	1000
	*3/17/87	OC	87.0 86.3	84.0 84.0	41.0 34.9	5250	5.7 1	TD	2000
	*4/28/87	TWC	84.4 84.0	72.7 72.6	59.1 58.4	3750	3.8 1	TD	2000
	*9/7/89	OC	87.3 86.8	94.0 91.6	- -	4000	5.0 1	TD	8000, 7000, 6000
		TWC	86.8 86.3	85.3 86.8	69.3 70.2	3750	3.8 1	TD	7000, 8000, 6000
		TW + OC	72.8 73.7	84.7 91.3	66.7 59.4	4000	5.7 1	TD	6000
Walker Manufacturing (517) 522-5500	+1/15/87	TW + OC	70.6 72.6	85.8 84.4	47.0 47.1	4000	4.3 1	TA	NA (never produced)
	2/10/87	TW + OC	79 81	83 85	48 52	4000	5.0 1	TA	NA (never produced)
	2/18/87 9/28/89	TWC	86 89	76 85	63 69	3750	3.8 1	TA	16126, 15127 (previously marketed as 15123, 15124)
	2/23/87 (revised 8/22/89)	OC	70.7 75.9	83.8 87.2	- -	4500	403 CI	TA	615113, 615114, 615115, 615116, 615117

* Same converters cover more than one application.

+Not AMA mileage accumulation

Companies that have submitted data demonstrating
Compliance with EPA policy (New Converters)

Company	Date	Type Catalyst	Efficiency HC	Efficiency CO	Efficiency NO_x	Coverage Weight	Coverage Engine	Manuf. Code	Part#
Walker Manufacturing	2/25/87 (revised 6/89)	TW + OC	81.1 81.8	74.5 74.4	52.2 54.9	4000	5.0 l (351 CI if 2 instal. in parallel)	TA	615133, 615134, 615526, 615606(2)
	4/14/87	TWC	80.1 81.4	82.3 77.8	49.6 46.2	3750	3.8 l	TA	615123, 615124, supercedes 2/18/87
	*4/15/87	OC	81 82	94 92	- -	5000	400 CI	TA	615111, 615112 (2 converters must be used)
	*2/02/92	TWC	81.2 84.4	79.7 81.5	81.2 84.6	3875	3.8 l	TA	15150, 51 15549-53, 66, 68, 84 (Same as 615111)
	*2/26/91	TW + OC	84.2 82.8	84.6 82.6	41.0 44.3	5500	5.8 l	TA	15140-43, 15546, 15170-72 (Can also replace certain 2 converter systems w/air tube between a TWC & OC)
	*7/29/91	TWC	85.2 87.1	80.6 84.5	72.9 71.0	5500	5.7 l	TA	15140-47, 15546, 15170-72 15556, 15146
	*7/22/92	OC	78.1 80.7	85.6 84.8	- -	5500	455 CID	TA	15140-47 15146, 15145
	8/16/93	TWC	80.4 81.3	73.9 73.0	70.0 63.9	4500	4.9 l	TA	615155 (15152-55) 615161 (15160-63)
Car Sound Exhaust (714) 858-5900	2/16/87	OC	72.9 70.5	88.0 80.8	- -	4000	5.7 l	CE	63000 series (old 400 & 600 series) (9120 for Maremont)
	9/15/87	TW + OC	83.2 78.8	86.5 83.4	56.6 70.9	4000	5.0 l	CE	83000 series (old 800 series

* Same converters cover more than one application.

+Not AMA mileage accumulation

Companies that have submitted data demonstrating
Compliance with EPA policy (New Converters)

Company	Date	Type Catalyst	Efficiency HC	Efficiency CO	Efficiency NO_x	Coverage Weight	Coverage Engine	Manuf. Code	Part#
Car Sound Exhaust (con't) (800) 824-8664	*9/17/87 retest 12/89	TWC	92.3 92.1	92.2 91.7	68.8 66.0	4000	5.0 l	CE	73000 series, 83000 series (old 700 & 800 series)
	4/20/88	TWC	88.5 83.9	81.7 85.6	91.8 86.6	3000	2.0 l	CE	52000 series (old 500 series (Also marketed as pre-converter)
	*9/07/89	OC	72.6 74.4	90.4 91.3	- -	5500	460 CID	CE	93000 series (old 900 series)
	*10/15/90	TWC	83.5 83.2	72.2 71.8	48.7 55.3	5500	5.7 l		
	*9/07/90	TW + OC	92.0 93.3	90.0 91.7	45.2 48.2	5500	5.8 l		
	*10/12/89	TW + OC	87.3 86.3	89.2 89.1	38.6 38.9	5500	318 CID	CE	33000 series (old 300 series) (marketed also as replacement with 1 or 2 LO cats)
	*2/12/91	TW + OC	79.6 77.9	77.3 73.7	42.5 41.4	5500	302 CID	CE	33000 series (marketed as single replace. for system w/engines less than 5.7 l w/ 1 or 2 TWC & One OC w/air injected in front of OC.)
	*12/19/89	OC	88.7 87.2	97.4 96.9	- -	4000	5.0 l	CE	73000 series, 83000 series (old 700 & 800 series)

* Same converters cover more than one application.

+Not AMA mileage accumulation

Companies that have submitted data demonstrating
Compliance with EPA policy (New Converters)

Company	Date	Type Catalyst	Efficiency HC	Efficiency CO	Efficiency NO_x	Coverage Weight	Coverage Engine	Manuf. Code	Part#
Car Sound Exhaust (con't)	*9/4/90	TWC (TWC + OC or OC)	89.9 (as TWC) 87.2 (as TW+OC)	85.0 84.4	68.4 50.7	5500 (Same as 900 series)	5.7 l (sames as 900 series)	CE	95000 series (old 900 HD series for California market)
	*4/8/93	TW + OC	79.7 77.7	76.5 72.3	60.0 59.9	5500	7.5 l	CE	95000 series (old 900 HD series for California)
	*8/30/91 (retested 8/24/93)	TWC	76.7 76.9	72.3 73.9	40.9 39.4	4250	5.0 l	CE	22000-24000 series (old 200 series)(also marketed as pre-cat)
	*8/6/91	TW + OC	71.8 70.9	78.0 70.4	43.3 41.6	4000	5.0 l	CE	22000-24000 series (old 200 series)
	*8/24/93	TWC	74.9 79.4	77.4 76.6	88.7 87.7	4000	3.8 l	CE	73000 series, 33,000 series (As replacement for TWC and up to 2 LO catalysts)
Schultz Man. (800) 268-5141 (Also marketed by Airtek)	2/16/87	OC	Same as Car Sound			4000	5.7 l	SM	403 - 406 (1600 for Airtek)
	9/15/87	TW + OC	Same as Car Sound			4000	5.0 l	SM	803 - 806 (1800 for Airtek)
	9/17/87	TWC	Same as Car Sound			4000	5.0 l	SM	703 - 706 (1700 for Airtek)
Perfection Automotive	3/6/87	OC	77.2 74.1	77.1 81.5	- -	4500	5.7 l	PA	23301-23312, 26, 29, 41, 43-45 23012, 23015, 23017, 23018 (192200, 192214 for Arvin, 3112 for Eastern), 23210-15

* Same converters cover more than one application.

+Not AMA mileage accumulation

Companies that have submitted data demonstrating
Compliance with EPA policy (New Converters)

Company	Date	Type Catalyst	Efficiency HC	Efficiency CO	Efficiency NO_x	Coverage Weight	Coverage Engine	Manuf. Code	Part#
Perfection Automotive (con't)	*5/4/87 (catalyst change 4/88)	TW + OC	81.6 79.3	75.7 70.3	55.9 54.1	4250	5.0 l	PA	23052, 23055, 23057, 23058 (193175, 193205, 193225 and 193250 for Arvin) (5114 for Eastern), 23351-97 (300 for ABX
Also marketed by Brown Recycling,	*5/27/87 (catalyst change 4/88)	TWC retested 6/6/89	88.8 88.7	76.3 79.9	56.6 51.7	4250	5.0 l	PA	23052, 23055, 23057, 23214 23058, 23363, (193175, 193205, 193225 & 193250 for Arvin) 23062, 23065, 23067, 23068 (200 for ABX)
Eastern Manufacturing, AP Industries	*4/7/89	OC	78.7 79.5	91.3 94.8	- -	4250	5.0 l	PA	23052, 23055, 23057, 23058 23351-56 23360, 23361, 23376, 23379
ABX & Arvin until 6/23/88)	*5/22/90	OC	80.9 82.9	86.4 85.8	- -	7000	460 CI	PA	23075, 77-83, 23070-73 23085, 87-89
(313) 425-3220 (800) 521-5575		TWC	83.9 85.0	80.6 84.0	56.1 57.3	7000	350 CI	PA	23075, 77-79, 23070-73 23085, 87-89, 23080-83
		TW + OC	78.6 79.3	83.8 84.0	30.4 32.4	7000	351 CI	PA	23075, 77-79 (to be marketed as single replacement for certain systems with 2 converters in series w/air injected between the converters). 23085, 87-89 23080-83

* Same converters cover more than one application.

+Not AMA mileage accumulation

Companies that have submitted data demonstrating
Compliance with EPA policy (New Converters)

Company	Date	Type Catalyst	Efficiency HC	Efficiency CO	Efficiency NO_x	Coverage Weight	Coverage Engine	Manuf. Code	Part#
Perfection Automotive (con't)	5/4/87 (retested 8/17/92)	TWC	89.3 87.4	79.9 77.3	78.1 79.8	3750	3.8 l	PA	23020 (to be marketed as single relacement for certain systems with 1 or 2 LO cats and one underbody converter w/air injected between converters or 1 or 2 LO cats and one TWC w/o air.)
	5/27/87 *10/30/90	TW + OC	78.1 72.3	81.4 77.6	52.0 52.7	3750	5.0 l		
	9/29/92	TWC	85.0 88.2	80.4 78.8	81.3 79.6	4250	3.8 l	PA	23032, 35, 37, 38
	1/15/93	TWC	86.3 87.3	73.6 76.9	79.9 80.8	4250	3.8 l	PA	23002, 005, 007, 008 (To be marketed as a pre-converter.)
Products for Power (708)543-4800 (800)323-3330	*3/18/87 (catalyst change 8/89)	TWC	86.1 86.9	74.9 73.1	56.8 57.6	4250	5.0 l	PP	5111-5144, 5211-5256 6111-6155, 6211-6215
	9/17/87	OC	70.0 78.0	93.3 92.9	- -	4250	5.7 l	PP	4111-4122, 4129, 4130
	*9/17/87 (catalyst change 8/15/89)	TWC + OC	70.6 75.7	73.4 75.9	42.3 43.8	4250	5.0 l	PP	5111-5144, 5211-5256 (can also replace certain systems with one or two LC cats) 6111-6155, 6211-6215
	*11/9/89 (catalyst change 8/89)	OC	82.9 78.5	92.1 92.7	- -	4250	5.0 l	PP	5111-5144, 5211-5256 6111-6155, 6211-6215

* Same converters cover more than one application.

+Not AMA mileage accumulation

Companies that have submitted data demonstrating
Compliance with EPA policy (New Converters)

Company	Date	Type Catalyst	Efficiency HC	Efficiency CO	Efficiency NO_x	Coverage Weight	Coverage Engine	Manuf. Code	Part#
Products for Power (con't)	*2/12/91	TWC	88 78	88 70	85 70	6000	5.7 l	PP	7000 series 8000 series
	*2/12/91	TW + OC	84 74	84 79	79 61	6000	5.9 l	PP	8000 series (also marketed as single replacement for system involving TWC and OC w/air injected between the converters)
	*4/30/91	OC	91.0 84.2	97.5 95.4	- -	6000	460 CID	PP	7000 series
	*2/27/92	TWC		same as 5111 series		4250	4.0 l	PP	3700 series
Maremont Corp.	6/3/87	OC	71.1 81.5	90.4 96.8	- -	4500	5.7 l	MM	8701-8703, 8705, 8720-8727 8730-8734
(also marketed by	*7/22/87	TWC	91.5 93.0	82.3 81.8	62.1 54.2	4750	5.7 l	MM	8801, 8880
Sears, Arvin and Carquest	*7/22/87	OC	80.1 82.3	96.2 96.2	- -	4750	5.7 l	MM	8801, 8880
(615)458-4681	*1/15/88	TW + OC	76.5 83.4	80.4 85.3	54.2 50.5	4500	5.0 l	MM	8901 series, 8939, 8940

* Same converters cover more than one application.

+Not AMA mileage accumulation

Companies that have submitted data demonstrating
Compliance with EPA policy (New Converters)

Company	Date	Type Catalyst	Efficiency HC	Efficiency CO	Efficiency NO_x	Coverage Weight	Coverage Engine	Manuf. Code	Part#
Maremont Corp. (con't)	*3/23/88	TWC	85.5 78.8	74.9 71.6	67.4 60.0	4500	3.8 l	MM	8901 series, 8829, 8830 8811 and 8820 series (8811 series revised 11/3/88)
	*8/5/88	OC	79.2 77.0	89.6 89.8	- -	4500	3.8 l	MM	8901 series 8811 and 8820 series (8811 series revised 11/3/88)
	*4/25/89	OC		Same as Walker	615111 615112	5000	400 CI	MM	8711, 8712 (2 converters must be used)
	*9/27/90	TWC	88.1 87.5	74.8 76.4	70.4 65.4	6000	5.7 l	MM	8802, 8833, 8834
	2/27/91	OC	80.7 85.6	94.9 91.0	- -	6000	460 CID	MM	8706 8735
	*4/22/92	TW + OC (or TWC)	83.3 85.5	83.6 87.1	43.4 44.4	5500	351 CID	MM	8906 (same as 8802 w/air tube)(Can also replace TWC and OC w/air injected between them.)
	9/23/93	TWC		Same as Car Sound 23000 Series		4250	5.0 l	MM	9528, 9538, 9539, 9548 9550
	10/7/93	TWC	82.4 80.8	75.8 78.9	65.1 66.8	3375	2.5 l	MM	9001, 9002, 9003

* Same converters cover more than one application.

+Not AMA mileage accumulation

Companies that have submitted data demonstrating
Compliance with EPA policy (New Converters)

Company	Date	Type Catalyst	Efficiency HC	Efficiency CO	Efficiency NO_x	Coverage Weight	Coverage Engine	Manuf. Code	Part#
Maremont Corp. (con't)	10/6/93	OC	Same as Car Sound 63000			4000	5.7 l	MM	9120
Midas International	8/25/87	OC	75.6 73.5	92.2 85.3	- -	4250	5.7 l	MI	35100 (IPC - 35100) series 35401, 35402, 35403, 35408 35410, 35411
312-650-5370 800-524-5063	6/6/88	TW + OC	85.1 87.6	77.0 83.0	64.5 63.0	4250	5.0 l	MI	35200 series (except 208, 09, 10) 35404-35407
	12/7/88	TWC	82.2 77.3	82.4 81.4	53.0 48.6	4250	5.0 l	MI	35300 series 35409
	*1/31/90	TW + OC	73.6 74.4	79.7 78.6	51.0 50.6	4500	5.0 l	MI	35208, 209, 210
	*10/9/90	TWC	78.9 78.8	70.5 70.0	34.8 35.3	4250	5.0 l	MI	35208, 09, 10

* Same converters cover more than one application.

+Not AMA mileage accumulation

Companies that have submitted data demonstrating
Compliance with EPA policy (New Converters)

Company	Date	Type Catalyst	Efficiency HC CO NO_x	Coverage Weight	Coverage Engine	Manuf. Code	Part#
Eastern Manufacturing 215-634-2682 215-423-3020	9/23/87	OC	Same as Products for Power	4250	5.7 1	EM	3112
		TWC		4250	5.0 1	EM	4113
		TWC + OC		4250	5.0 1	EM	5114
Brown Core Supply 205-778-7749	10/8/87	OC	Same as Products for Power	4250	5.7 1	BC	UN 231-236 UN 240-UN-252
		*OC		4250	5.0 1	BC	UN 331-351
		*TWC		4250	5.0 1	BC	UN 331-351
		*TW + OC or *TWC		4250	5.0 1	BC	BC 4331-4336, BC 437-441 BC 453-462

* Same converters cover more than one application.

+Not AMA mileage accumulation

Companies that have submitted data demonstrating
Compliance with EPA policy (New Converters)

Company	Date	Type Catalyst	Efficiency HC	Efficiency CO	Efficiency NO_x	Coverage Weight	Coverage Engine	Manuf. Code	Part#
AP Parts 419-259-3461	4/7/88	TWC	Same as Products for Power 5111 & 6111 series			4250	5.0 l	AP	4650-52, 4654-57 4664
		TW + OC				4250	5.0 l	AP	4653, 4659-63, 65-67
	8/15/89	OC	Same as Products for Power 4111 Series			4250	5.7 l	AP	4658
	8/15/89	TWC	Same as Perfection #23065-67			4250	5.0 l	AP	23565, 23567 4608, 4609
W.R. Grace 301-659-9020	*5/6/88	OC	81.7 84.4	88.8 87.7	- -	3750	3.8 l	GR	5000
(marketed by Camet) 216-569-3245	*5/6/88	TWC	83.2 85.0	73.3 74.4	49.7 38.7	3250	2.8 l	GR	5000

* Same converters cover more than one application.

+Not AMA mileage accumulation

Companies that have submitted data demonstrating
Compliance with EPA policy (New Converters)

Company	Date	Type Catalyst	Efficiency HC	Efficiency CO	Efficiency NO_x	Coverage Weight	Coverage Engine	Manuf. Code	Part#
ABX Corporation	6/1/89	*OC	78.3 72.9	94.8 92.5	- -	4500	5.7 l (350 CID)	AB	1000, 1001, 1010
800-251-2100 908-238-5151	6/1/89	*TWC	82.5 81.6	85.0 70.9	36.1 48.0	3500	3.8 l (231 CID)	AB	1000, 1001, 1010
AirTek, Inc. d/b/a Catco	*11/9/90	OC	Same as W.R. Grace			3750	3.8 l	AT	5000 series
219-757-5610 800-247-2515	*11/9/90	TWC	Same as W.R. Grace			3250	3.8 l	AT	5000 series
	*2/12/91	TW + OC	86.2 79.1	72.2 73.6	69.1 51.6	4500	5.0 l	AT	5800 series
	*2/12/91	TWC	85.9 80.5	72.3 78.1	43.2 33.9	4250	3.8 l	AT	5700 series
	*2/6/92	OC	84.2 88.5	79.9 88.2	38.5 31.5	7000	7.5 l (460 CID)	AT	7000 series
	*2/6/92	TWC	81.8 82.0	86.0 81.5	47.3 47.3	7000	5.7 l	AT	8000 series

* Same converters cover more than one application.

+Not AMA mileage accumulation

Companies that have submitted data demonstrating
Compliance with EPA policy (New Converters)

Company	Date	Type Catalyst	Efficiency HC	Efficiency CO	Efficiency NO_x	Coverage Weight	Coverage Engine	Manuf. Code	Part#
AirTek, Inc. (con't)	*5/6/92	TW + OC	88.2 92.2	75.8 82.3	39.4 44.6	7000	5.9 l	AT	9000 and 9500 series (can also be marketed as a single replacement for 2 converters w/air injected between them).
	*8/6/92	OC	80.1 86.3	76.5 80.5	- -	4500	5.0 l	AT	2000 series
		TWC	85.1 88.3	77.0 85.1	67.3 72.6	4500	5.0 l	AT	3000 series
		TW + OC	87.9 84.8	89.6 81.6	65.2 60.6	4500	5.0 l	AT	4000 series
	*10/23/92	TW + OC	87.8 84.3	70.1 77.8	48.9 44.4	7000	5.2 l	AT	9500 series (same as 9000 series) also marketed as replacement for TW+OC plus 1 or 2 pre-catalysts.

* Same converters cover more than one application.

+Not AMA mileage accumulation

Companies that have submitted information indicating they are capable of properly testing used OE converters in compliance with EPA policy (Used Converters)

Company	Manufacturer Code
Tested Products, Inc Oak Park, MI 800-327-6481 313-542-9911	TP
SPACO Warners, NY 315-488-2617 800-536-8378	SP
AM PHIL Products Galax, VA 703-236-6969 800-541-7966	PH
KGC Warehouse Humansville, MO 417-276-3059	KG
Nova Catalytic Converters Dallas, TX 214-748-1011	NC
Smith Brothers Associated HCR 85 Box 267A Buffalo, MO 65622 417-345-7166	SB
Miller Catalyzer Hayward, CA 94545 510-732-0622 800-826-6615	MC

UNITED STATES ENVIRONMENTAL PROTECTION AGENCY
WASHINGTON, D.C. 20460

SEP 30 2004

OFFICE OF
ENFORCEMENT AND
COMPLIANCE ASSURANCE

Mr. Joseph Kubsh
Deputy Director
Manufacturers of Emissions Controls Association
1660 L St. NW, Suite 1100
Washington DC, 20036

Dear Mr. Kubsh:

This is in response to your inquiries to the U.S. Environmental Protection Agency (EPA) regarding the sale and use of aftermarket catalytic converters (AMCC) that comply with the State of California "Optional Evaluation Procedures for New Aftermarket Non-Original Equipment Catalytic Converters in Motor Vehicles Equipped With On-Board Diagnostic (OBD-II) Systems" (California AMCC/OBD-II procedures). In those inquiries, you requested clarification of EPA's policy regarding the use of aftermarket converters on motor vehicles outside of California that have been demonstrated to comply with the California AMCC/OBD-II procedures, and you offered to work with EPA to develop a federal AMCC program for OBD-II equipped vehicles.

As you know, EPA issued a Notice of Proposed Enforcement Policy regarding the "Sale and Use of Aftermarket Catalytic Converters," 51 Fed. Reg. 28,114 (Aug 5, 1986) (EPA AMCC policy) that established performance and use criteria for AMCCs, and associated recording keeping and reporting requirements. Under this policy, EPA stated that the sale and installation of AMCCs that met all the requirements of the policy would not be consider a violation of the "tampering prohibition" under Section 203(a)(3) of the Clean Air Act (Act). The EPA AMCC Policy remains in effect today.

The EPA AMCC Policy does not address or contain demonstration or performance requirements for vehicles equipped with OBD-II. In response to industry requests for clarification regarding the applicability of the EPA AMCC Policy to OBD-II equipped vehicles, EPA issued a letter on August 2, 2000. That letter stated that AMCCs meeting the requirements of the EPA AMCC policy may be installed on vehicles equipped with OBD-II systems. However, if the Malfunction Indicator Light (MIL) illuminates and the OBD-II code indicates a failure of the AMCC during the 25,000 mile AMCC warranty period, the AMCC must be covered under warranty. This interpretation remains in effect for any AMCC meeting the requirements of the EPA AMCC policy.

The California AMCC/OBD-II procedures, published in December, 2001 on an interim basis, contain significant new testing, aging, reporting and auditing requirements to ensure the performance and durability of such converters. AMCCs meeting this policy may be installed on OBD-II vehicles without incurring liability under the California tampering prohibition.

We believe the California AMCC/OBD-II procedure is at least as stringent as the EPA AMCC policy, and probably is more stringent. As a result, we believe that compliance with the California AMCC/OBD-II procedures is equivalent to compliance with the EPA AMCC policy. Therefore, on an interim basis, EPA will allow the sale and installation outside of California of AMCCs that have been approved by California under their AMCC/OBD-II procedures. Under this interim policy, EPA will not issue separate approvals of these AMCCs. However, manufacturers of these AMCCs must submit to EPA copies of the California approval, and copies of all information required to be submitted to California under their procedures, including information on testing, production audits and corrective actions proposed. This information must be sent to Steve Albrink, EPA Certification and Compliance Division (6403J), 1200 Pennsylvania Ave. NW, Washington, DC, 20460.

Thus, manufacturers and installers have two options for AMCCs that may be installed on OBD-II vehicles outside of California:

- AMCCs that meet the requirements of the EPA AMCC policy, provided the AMCC warranty is honored when the OBD-II system indicates a catalyst malfunction during the 25,000 mile warranty period; and

- AMCCs that meet the requirements of the California AMCC/OBD-II procedures, provided the AMCC warranty is honored when the OBD-II system indicates a catalyst malfunction during the 25,000 mile warranty period, and provided that the information described above is submitted to EPA.

EPA will evaluate the California procedures more fully to determine if any or all of these procedures and requirements should be required for AMCCs used outside of California. We will contact you for further discussions on this subject. If you have further questions, please contact Ms. Anne Wick of my staff at 202-564-2063.

Sincerely

George Lawrence, Chief
Mobile Source Enforcement Branch
Air Enforcement Division

UNITED STATES ENVIRONMENTAL PROTECTION AGENCY
WASHINGTON, D.C. 20460

OFFICE OF
AIR AND RADIATION

WHAT YOU SHOULD KNOW ABOUT USING, INSTALLING, OR BUYING AFTERMARKET CATALYTIC CONVERTERS

As of January 1, 1988, all persons engaged in the business of automotive service and repair, as well as other parties named in section 203(a)(3) of the Clean Air Act*, are prohibited from installing or selling aftermarket catalytic converters which have not met the criteria of EPA's interim enforcement policy entitled 'Sale and Use of Aftermarket Catalytic Converters'* (published on August 5, 1986). The installation of non-complying converters by a named party will be considered a violation of section 203(a)(3) of the Clean Air Act, and the violator may be subject to a civil penalty of up to $25,000 for each improper installation.

EPA's aftermarket converter policy also requires installers to maintain certain records pertaining to the aftermarket converters they install.

This fact sheet has been prepared by the EPA to explain the aftermarket converter policy and to answer questions you are likely to have. If you need any further information about this policy, please call EPA at (202) 564-9240. If you have a complaint about someone who may have violated these requirements, please call (734) 214-4877 or (202) 564-1033.

(1) Why are there special requirements for aftermarket converters?

The catalytic converter is the most important pollution control device on a vehicle. Catalytic converters have been installed on most 1975 and newer passenger cars and light-duty trucks by the manufacturers to reduce exhaust emissions and allow the vehicles to meet Federal standards. The original converters are designed to last the life of properly tuned and maintained vehicles. Some vehicles have not been properly tuned and maintained, however, and their converters have been ruined or even removed. If the vehicle is out of warranty, the price of a new original equipment converter (or set of converters) could cost anywhere from $300 to $1,000. Because of this problem and the sometimes scarce availability of the new original equipment converters, EPA believes that less expensive yet still effective aftermarket converters give vehicle owners more incentive to replace their worn-out converters, keeping our air cleaner.

Since the effectiveness of converters depends on their durability, performance, and proper application, EPA has required aftermarket converters to meet certain minimum performance standards while also requiring installers to install the appropriate converters. These requirements make

* The 1990 Amendments to the Clean Air Act expanded this prohibition to "any person" and not just individuals in the service and repair industry.

everyone 'play by the same rules' while maximizing the air quality benefits obtained. The policy contains other warranty, reporting and record keeping requirements which make it possible for EPA to enforce the requirements and ensure that the customers get what they pay for.

(2) When did the requirements take effect?

The policy itself was effective when it was published on August 5, 1986. Converters manufactured or re-manufactured after December 18, 1986, were required to meet the standards imposed by EPA. As of January 1, 1988, only converters meeting the requirements can be sold and installed.

(3) How do aftermarket converters differ?

There are two categories of aftermarket converters: new and used. New universal converters usually cover a wide variety of vehicles within certain limits. Used converters are usually "reconditioned" OE converters, and can only be installed on the type of vehicle or vehicles for which they were originally intended. New converters are required to have warranties, but used converters are not.

Both new and used converters can be one of 3 general types: oxidation converters, three-way converters, and three-way-plus-oxidation converters. Oxidation converters are the early generation of converters that were designed to reduce hydrocarbons (HC) and carbon monoxide (CO). Oxidation converters usually contain platinum and/or palladium. In 1980 or 1981 (earlier on some California vehicles) most vehicle manufacturers began using converters which were designed to reduce nitrogen oxides (NOx) in addition to HC and CO. Along with these converters, computer control systems and oxygen sensors were also usually employed to precisely control the air to fuel (A/F) ratio and mixture controls. These converters are referred to as three-way converters (TWC) and usually contain the additional noble metal rhodium.

Some converters have a three-way and an oxidation catalyst together in one housing or "can" and are called three-way-plus-oxidation (TW + OC) or dual-bed converters. These converters have air injected between the two sections to help the two different chemical reactions occur. (Three-way catalysts require a slightly richer mixture while the oxidation converter requires a lean-mixture, hence air is injected after the three-way "bed" and before the oxidation "bed".)

It is important to install the correct converter type for it to operate effectively and not adversely affect the performance of the vehicle or its emission control systems.

(4) How can I tell if an aftermarket converter meets EPA requirements?

Any converter which meets EPA requirements must be properly labeled and warranted to meed Federal durability and performance standards. New aftermarket converters are required to have a 5 year/50,000 mile warranty on the converter shell and end pipes. They are also required to

be warranted to meet EPA's emission performance standards for 25,000 miles when the vehicle is properly used and maintained. Used converters are only required to meet the performance requirements at the time of sale; no additional warranty is required. All manufacturers who meet the requirements also must state that fact in writing. Usually this is stated in the warranty infor-mation or application catalog.

Required labels on the converters will have a series of letters and numbers and be in the following format:

N/XX/YYYY/ZZZZ for new ones
U/XX/YYYY/ZZZZ for used

where N - indicates a new converter

U - indicates a used converter

XX - is the manufacturer's code issued by EPA

YYYY - is usually a numerical designation of the vehicle application or part number

ZZZZ - is the month and year of manufacture (i.e., "0187" for January 1987)

Note: Converters manufactured for sale in California may have the letters "CA" in place of the "N" or "U". Since California standards are more stringent than EPA's, these converters will also meet EPA requirements.

Many of the trade publications will also carry information about which companies have converters which meet EPA requirements. If you're not sure, you can call EPA at the number listed earlier.

(5) What about using converters from salvage yards or junked cars?

EPA considers it a violation of the policy to install a used converter from a salvage yard or sell it for reuse unless it has been properly tested and labeled. Similarly, it is a violation to install an untested used converter brought in *by* a customer, even if the customer insists that the used converter came off his/her vehicle.

Salvage or junk yards also would be considered liable for causing tampering if they sell converters that have not been tested or do not meet the requirements outlined in the policy and if the converters are subsequently installed by parties named in the Clean Air Act as prohibited from tampering.

(6) When can I install an aftermarket converter?

Generally, there are only 3 situations when you can install an aftermarket converter. They are:

(1) if the converter is missing from the vehicle when brought in for exhaust system repair; or

(2) if a State or local inspection program has determined the existing converter has been lead poisoned, damaged, or otherwise needs replacement; or

(3) if the vehicle is more than 5 years old or has more than 50,000 miles* (8 years/80,000 miles for 1995 and newer vehicles) and a legitimate need for replacement has been established and appropriately documented (e.g., a plugged converter or unrepairable exhaust leaks).

Any other converter replacement must be with a 'certified' or new original equipment (OE) or equivalent converter.

Aftermarket converters subject to the enforcement policy requirements cannot be used for replacement if:

(1) the existing converter is present and functioning properly; or

(2) the replacement is under recall or warranty; or

(3) the vehicle is returning from overseas use.

(7) In general, what are the requirements for manufacturers?

Manufacturers of new converters are required to run two worst-case vehicles with their converters installed for 25,000 miles each and then conduct testing. The testing must show that the converters will meet certain performance levels for reduction of emissions.

Re-manufacturers of used converters may only use OE converters and must test each converter on a bench test to show that it is still performing satisfactorily.

Both new and used converter manufacturers must comply with certain record keeping and reporting requirements. They must also have a system to notify installers of the requirements and

* (Vehicles with less age or mileage may be entitled to **free** repairs by the vehicle manufacturer under the emissions warranty if the original converter was defective.)

restrictions which apply. Manufacturers of new converters are also required to provide a warranty on the converter shell and end pipes for 5 years or 50,000 miles, whichever comes first, and for 25,000 miles on converter emission performance.

All converters are required to be labeled as previously outlined.

(8) What are the requirements for installers?

Besides installing aftermarket converters only in the 3 situations outlined in response to question (6), other requirements and restrictions also apply. These include completely documenting the need for converter replacement, properly installing the correct one on the vehicle, and informing the customer of his rights and certain restrictions.

Specifically, these requirements are as follows:

(1) If the replacement is not required by a State or local program, both customer and installer must sign a statement concerning why the converter was replaced. (Manufacturers either provide such a statement with the converter or have an example in their catalogs.)

(2) If the replacement is required by a State or local program, the installer must keep a copy of the statement or order by the program representative.

(3) The invoice for replacement must include the customer's name and complete address, and the vehicle's make, model year, and mileage, as well as the reason for replacement.

(4) Retain copies of the above invoices and statements for 6 months and the replaced converters for 15 days (converters must be identified or marked as to which customer's car they came from).

(5) Install the converter in the same location as the original.

(6) Install the same type of converter as the original (oxidation, 3-way, or 3-way-plus-oxidation (dual-bed)). This information is sometimes available on the emission tune-up label or from the manufacturer's application catalog.

(7) Install the proper converter for the vehicle as determined and specified by the converter manufacturer. There are engine size and vehicle weight limitations which make it inappropriate to install certain converters on certain vehicles. Newer vehicles with On-Board Diagnostic (OBD) systems may not always operate properly with certain aftermarket products. Therefore, the catalog should always be consulted for the correct application.

(8) The converter must always be properly connected to any existing air injection components.

(9) Install all the other required converters the vehicle would have originally come with unless the converter manufacturer has stated in writing that the aftermarket converter is designed to replace more than one converter.

(10) For new aftermarket converters, the installer must fill out the warranty information card supplied by the manufacturer and give it to the vehicle owner or operator.

(9) What should customers know about buying converters for their cars?

First and most importantly, the original converter on a car or truck was designed to last the life of the vehicle if it is properly used and maintained, and is warranted by the vehicle manufacturer to last for at least 5 years or 50,000 miles (8 years or 80,000 miles on 1995 and newer cars and trucks), whichever comes first. See the vehicle warranty booklet for more information.

An original equipment converter is designed as an integral part of the vehicle's emission and engine system to achieve the lowest possible emissions and optimal performance. New aftermarket converters are generally designed to be installed on a wide range of vehicles so that the backpressure changes created by the converters may, in some cases, adversely affect vehicle and engine performance. Used converters are not required to have a warranty, and their performance and remaining life is dependent on their prior use history. In general, aftermarket converters are not designed to perform as well as the converter(s) originally on the vehicle. Aftermarket converters, however, will usually provide acceptable performance at a lower cost.

Because of the effects of backpressure and heat created during operation and the effectiveness and compatibility of some emission systems with certain converters, it is important to make sure that the converter installed is the proper one for a customer's car or truck. Every installer should have access to and check the application catalog which describes the vehicles each converter can be installed on.

Next to installing the proper converter, probably the best way to keep the converter operating properly and under warranty is to make sure the vehicle is properly tuned. A properly tuned and operated vehicle is critical for a long converter life. Otherwise, you may ruin the converter, void your warranty, and possibly cause engine damage along with higher emissions.

(10) How do I determine the correct converter for a car or truck?

Remember, as discussed above, that converters can be one of three general types. The applications catalog from the converter manufacturer should be checked to determine the proper converter for the vehicle. Keep in mind that particularly large vehicles and engines may not be covered by most manufacturers. Newer vehicles may not work properly with <u>some</u> aftermarket

converters. After you have determined the correct type of converter for the vehicle, the engine size and vehicle weight limitations must be considered. If the converter was not designed to cover a large enough vehicle or engine, the converter may be destroyed or cause vehicle engine problems along with voiding the converter warranty and violating Federal law.

(11) What may happen if I don't use the correct converter?

First, it is a violation of Federal law because it is likely to increase the amount of pollution coming out of the vehicle. Penalties for violations by individuals, service or repair shops or fleet operators are up to $2,500 per violation. (Each improper installation is considered a violation.) New car dealers can be penalized up to $25,000 per violation. Any person who causes a violation could be subject to the same penalty as the installer.

Vehicle performance can also be affected by the use of the wrong converter and, in some severe cases, converter or engine overheating could occur, resulting in unsafe operation and possibly engine damage. The conditions or even simply the use of the wrong part on a vehicle may allow the converter manufacturer to not honor the 25,000 mile of the 5 year/50,000 mile warranty,

Appendix 5

Muffler/Repair Shop Invoice Information

Muffler / Repair Shop Invoice Information

Facility Name:_____ Invoice #:_____

Date of Invoice:_____/_____/_____ Date of work: _____/_____/_____

Make / Model / Year :_____/_____/_____

VIN:_____ Plate #:_____

Owner's Name:_____ Phone #: _____-_____-_____

Street:_____ City:_____, OH _____

Work Performed:

Installer Name:_____

Facility Name:_____ Invoice #:_____

Date of Invoice:_____/_____/_____ Date of work: _____/_____/_____

Make / Model / Year :_____/_____/_____

VIN:_____ Plate #:_____

Owner's Name:_____ Phone #: _____-_____-_____

Street:_____ City:_____, OH _____

Work Performed:

Installer Name:_____

Inspector Name(s)_____ Date:_____/_____/_____

Appendix 6

On-Site Inspection Report

On-Site Inspection Report

Ohio EPA District Office / LAA:_____

Inspector Name(s):_____

Facility Name:_____ Date:_____/_____/_____ Time:_____

Street:_____ City:_____,OH _____

Contact Person (Name / Title):_____/_____

Telephone Number:_____-_____-_____

Facility Type: Government or Commercial Fleet / Muffler/Repair Shop / Car Dealer (circle one)

Total Vehicle in Fleet:_____ Total Vehicle Inspected:_____ Total Violations Found:_____

Are air pollution control-related repairs performed by this facility? YES ( ) NO ( )

If NO, where are repairs performed? Name:_____

Street:_____ City:_____, OH _____

Phone Number:_____-_____-_____

1. License #:_____ Year:_____ Make:_____ Model:_____

VIN:_____ Apparent Violations:_____

_____

2. License #:_____ Year:_____ Make:_____ Model:_____

VIN:_____ Apparent Violations:_____

_____

3. License #:_____ Year:_____ Make:_____ Model:_____

VIN:_____ Apparent Violations:_____

_____

4. License #:_____ Year:_____ Make:_____ Model:_____

VIN:_____ Apparent Violations:_____

Appendix 7

Tampering Report

Tampering Report

Facility Name:_____ Date:_____/_____/_____

License #:_____ Year:_____ Make:_____ Model:_____

VIN:_____ Mileage:_____

Transmission: (Manual or Automatic) Air Conditioning: (Yes / No) New / Used / Demo

Date / Place Purchased:_____/_____/_____Place:_____

Emission Controls

PCV	TAC	AIR	EEC	O2	EGR	FIR	CAT	EXHT

Description of Tampering

Comments:

Maintenance Information:

Appendix 8

Investigation Follow-Up Form

Investigation Follow-Up

Repair Facility

Facility Name:_____Phone #:_____-_____-_____

Street:_____ City:_____, OH _____

Contact Name(s):_____ Invoice Number:_____

Owner's Name(s):_____

Vehicle Description

Make:_____ Model:_____ Year:_____

VIN#:_____ Plate #:_____

GVWR:_____ Mileage:_____

Transmission: (Manual or Automatic) Air Conditioning: (Yes / No) New / Used / Demo

Date / Place Purchased:_____/_____/_____Place:_____

Photos Taken: (Yes / No) Comments:_____

Exhaust Description:

Owner's Comments:

Signatures

Vehicle Owner(s):_____ Date:_____/_____/_____

_____ Time:_____(AM/PM)

EPA Official(s): _____

Appendix 9

General Contact Report

General Contact Report

Date:_____/_____/_____ Time:_____AM/PM

Manufacturer / Organization Name:_____

Name of EPA Representative:_____

check if contact initiator: ☐

Name of Manufacturer / Organization Representative:_____

check if contact initiator: ☐

Type of Contact: (check one) ☐ Telephone ☐ Meeting ☐ Other:_____

Topics Covered: Note any resolutions and/or additional actions required on this form

Signature of EPA official & date

Appendix 10

RC 3704.16, .161, .162, .99, and 4501.01(B)

3704.16 Prohibiting tampering with motor vehicle emission control systems.

(A) As used in sections 3704.16 to 3704.162 of the Revised Code:

(1) “Tamper with” means to remove permanently, bypass, defeat, or render inoperative, in whole or part, any emission control system that is installed on or in a motor vehicle.

(2) “Motor vehicle” has the same meaning as in section 4501.01 of the Revised Code.

(3) “Emission control system” means any system designated by the United States environmental protection agency as an emission control system under Title II of the “Clean Air Act Amendments.” “Emission control system” includes any device or element of design of the system.

(4) “Clean Air Act Amendments” has the same meaning as in section 3704.14 of the Revised Code.

(5) Notwithstanding section 3704.01 of the Revised Code, “person” has the same meaning as in section 1.59 of the Revised Code.

(B) No person shall do any of the following:

(1) Sell, offer for sale, possess for sale, advertise, manufacture, install, or use any part or component intended for use with or as part of any motor vehicle when the primary effect is to bypass, defeat, or render inoperative, in whole or part, the emission control system;

(2) Introduce a leaded fuel into a motor vehicle that is designed, manufactured, or certified by the United States environmental protection agency to use only unleaded fuels;

(3) Tamper with any emission control system installed on or in a motor vehicle prior to its sale and delivery to the ultimate purchaser;

(4) Violate any rule or order the director of environmental protection adopts or issues under section 3704.161 of the Revised Code;

(5) Refuse to permit the director or his designee to inspect any motor vehicle or documents as provided in division (A) of section 3704.161 of the Revised Code.

The sale, offering for sale, possession for sale, advertisement, manufacture, installation, and use of a part or component in violation of division (B)(1) of this section all constitute separate offenses.

(C) No person shall knowingly do any of the following:

(1) Operate a motor vehicle that has been tampered with if the motor vehicle or motor vehicle engine has been certified by the United States environmental protection agency as meeting federal or California emission control standards;

(2) Sell, lease, rent, or offer to sell, lease, or rent, or transfer or offer to transfer title or a right to possession of a motor vehicle that has been tampered with;

(3) Tamper with any emission control system installed on or in a motor vehicle after sale, lease, or rental and delivery of the vehicle to the ultimate purchaser, lessee, or renter.

The sale, lease, rental, and offer to sell, lease, or rent, and other transfer or offer to transfer of title or a right to possession of a motor vehicle in violation of division (C)(2) of this section all constitute separate offenses.

(D) Division (C)(2) of this section does not apply to either of the following:

(1) Any person who sells, leases, rents, or offers to sell, lease, or rent, or transfers or offers to transfer title or a right to possession of a motor vehicle that has been tampered with if the person is acting as a motor vehicle auction owner, a special auctioneer, or a salvage motor vehicle auction and if the person holds a current and appropriate license to engage in those activities issued under Chapter 4517., 4707., or 4738. of the Revised Code;

(2) The sale, lease, rental, or offer to sell, lease, or rent, or transfer or offer to transfer title or right to possession of a motor vehicle that has been tampered with if the vehicle is titled with a salvage certificate of title issued under section 4505.11 of the Revised Code.

(E) Notwithstanding divisions (B)(1) and (3) and (C)(3) of this section, it is not a violation of those divisions if either of the following conditions is met:

(1) The action is taken for the purpose of repair or replacement of the emission control system or is a necessary and temporary procedure to repair or replace any other item on the motor vehicle and the action results in the system's compliance with the "Clean Air Act Amendments";

(2) The action is for the purpose of converting a motor vehicle to use a clean alternative fuel, as defined in Title II of the "Clean Air Act Amendments," the motor vehicle complies with the applicable standard adopted under Section 202 of that act when operating on the fuel, an emission control system is installed or replaced upon completion of the conversion, and the action results in the system's compliance with that act when the motor vehicle operates on the fuel for which it originally was designed.

Effective Date: 09-27-1993

3704.161 Enforcement.

(A) The director of environmental protection shall enforce sections 3704.16 to 3704.162 of the Revised Code and the rules adopted under them. In doing so, the director or the director's authorized representative may do either or both of the following:

(1) Inspect, during normal business hours, any motor vehicle or documents located at premises owned, operated, rented, leased, or otherwise used by any owner or operator of a motor vehicle if that motor vehicle is operated for commercial purposes, or by any person engaged in the sale, lease, or rental of motor vehicles or motor vehicle parts, in order to determine compliance with sections 3704.16 to 3704.162 of the Revised Code and the rules adopted under them;

(2) Issue a notice of violation to any person who violates any provision of sections 3704.16 to 3704.162 of the Revised Code or the rules adopted under them and who the director or the director's authorized representative finds has committed such a violation. The notice of violation shall set forth the specific violation allegedly committed by the person and be accompanied by an order requiring the person to comply with the relevant provision. The person may appeal the order to the environmental review appeals commission in accordance with section 3745.04 of the Revised Code.

(B) The director shall adopt rules in accordance with Chapter 119. of the Revised Code to implement sections 3704.16 to 3704.162 of the Revised Code. The rules shall include all of the following:

(1) Requirements and procedures for inspection of motor vehicles and documents under division (A)(1) of this section;

(2) A method by which any person may report violations or suspected violations of sections 3704.16 to 3704.162 of the Revised Code to the director for enforcement;

(3) Any other rule the director determines necessary for the administration and enforcement of sections 3704.16 to 3704.162 of the Revised Code.

(C)(1) Notwithstanding any other section of the Revised Code relating to the distribution or crediting of fines for violations of the Revised Code, all fines imposed under divisions (D) and (E) of section 3704.99 of the Revised Code resulting from an arrest made by the law enforcement agency of a political subdivision shall be paid to the treasury of the political subdivision.

(2) All civil penalties collected pursuant to section 3704.06 of the Revised Code for violations of section 3704.16 of the Revised Code and the rules adopted under this section shall be deposited in the anti-tampering settlement fund, which is hereby created in the state treasury. The director shall use the moneys in the fund solely for public education concerning and administration and enforcement of sections 3704.16 to 3704.162 of the Revised Code.

Effective Date: 12-02-1996

3704.162 Rescinding transaction for violation.

(A) For a violation of division (C)(2) or (3) of section 3704.16 of the Revised Code, a purchaser, renter, or lessee of a motor vehicle or a person who rents or leases a motor vehicle to a renter or lessee has a cause of action and is entitled to rescission of the transaction, recovery of actual damages, or both. In any action for rescission of the transaction, rescission shall occur within a reasonable amount of time after the purchaser, renter, or lessee or person who rents or leases a motor vehicle to a renter or lessee discovers or should have discovered the grounds for rescission.

(B) For a violation of division (C)(3) of section 3704.16 of the Revised Code, a purchaser, renter, or lessee of a motor vehicle or a person who rents or leases a motor vehicle to a renter or lessee may seek a declaratory judgment, an injunction, or other appropriate relief.

(C) In any action brought under division (A) or (B) of this section, the court may award to the prevailing party reasonable attorney's fees limited to the work reasonably performed if either of the following applies:

(1) The purchaser, renter, or lessee or person who rents or leases a motor vehicle to a renter or lessee has brought or maintained a groundless action and has filed the action in bad faith;

(2) The purchaser, renter, or lessee or person who rents or leases a motor vehicle to a renter or lessee has knowingly violated division (C)(3) of section 3704.16 of the Revised Code in regard to the violation on which the action is based.

Effective Date: 09-27-1993

3704.99 Penalty.

(A) Whoever recklessly violates division (A), (B), (C), (D), (E), (F), (G), or (I) of section 3704.05 or division (B)(5) of section 3704.16 of the Revised Code shall be fined not more than twenty-five thousand dollars or imprisoned not more than one year, or both, for each violation. Each day the violation continues after a conviction for a violation is a separate offense.

(B) Whoever knowingly violates division (H), (J), or (K) of section 3704.05 of the Revised Code shall be fined not more than ten thousand dollars for each day of each such violation.

(C) Whoever violates section 3704.15 of the Revised Code is guilty of a misdemeanor of the first degree.

(D) Whoever violates division (B)(2) or knowingly violates division (C)(1) of section 3704.16 of the Revised Code is guilty of a minor misdemeanor.

(E) Whoever violates division (B)(1) or (3) or knowingly violates division (C)(2) or (3) of section 3704.16 of the Revised Code shall be fined not less than five hundred nor more than twenty-five hundred dollars for each day of each violation.

(F) Whoever recklessly violates division (B)(4) of section 3704.16 of the Revised Code shall be fined not more than twenty-five thousand dollars or imprisoned not more than one year, or both, for each violation. Each day the violation continues after a conviction for a violation is a separate offense.

(G) The sentencing court, in addition to the penalty provided in divisions (D), (E), and (F) of this section, shall order the offender to restore within thirty days any emission control system that was tampered with in connection with the violation or to provide proof that the motor vehicle whose emission control system was tampered with has been dismantled or destroyed. The court may extend that deadline for good cause shown. If the offender does not take the corrective action ordered under this division, each day that the violation continues is a separate offense. Violation of a court order entered under this division is punishable as contempt under Chapter 2705. of the Revised Code.

Effective Date: 03-30-1995; 07-01-2005

Chapter 4501: MOTOR VEHICLES - DEFINITIONS; GENERAL PROVISIONS

4501.01 Motor vehicles definitions.

As used in this chapter and Chapters 4503., 4505., 4507., 4509., 4510., 4511., 4513., 4515., and 4517. of the Revised Code, and in the penal laws, except as otherwise provided:

,.....

(B) “Motor vehicle” means any vehicle, including mobile homes and recreational vehicles, that is propelled or drawn by power other than muscular power or power collected from overhead electric trolley wires. “Motor vehicle” does not include utility vehicles as defined in division (VV) of this section, motorized bicycles, road rollers, traction engines, power shovels, power cranes, and other equipment used in construction work and not designed for or employed in general highway transportation, well-drilling machinery, ditch-digging machinery, farm machinery, and trailers that are designed and used exclusively to transport a boat between a place of storage and a marina, or in and around a marina, when drawn or towed on a public road or highway for a distance of no more than ten miles and at a speed of twenty-five miles per hour or less.

,..... (through VV)

Amended by 128th General Assembly ch. 1, HB 2, § 101.01, eff. 7/1/2009.

Effective Date: 01-01-2004; 09-16-2004; 09-29-2005; 04-06-2007; 2007 HB9 10-18-2007

Appendix 11

Clean Air Act Materials

CLEAN AIR ACT AMENDMENTS

SEC. 228. ENFORCEMENT.

(a) Inspections and Testing.-Section 203(a)(2) of the Clean Air Act (42 U.S.C. 7522(a)(2)) is amended to read as follows:

"(2)(A) for any person to fail or refuse to permit access to or copying of records or to fail to make reports or provide information required under section 208;

"(B) for any person to fail or refuse to permit entry, testing or inspection authorized under section 206(c) or section 208;

"(C) for any person to fail or refuse to perform tests, or have tests performed as required under section 208;

"(D) for any manufacturer to fail to make information available as provided by regulation under section 202(m)(5);".

(b) Tampering With Vehicle Emission Controls.-(1) Section 203(a)(3) (42 U.S.C. 7522(a)(3)) is amended to read as follows:

"(3)(A) for any person to remove or render inoperative any device or element of design installed on or in a motor vehicle or motor vehicle engine in compliance with regulations under this title prior to its sale and delivery to the ultimate purchaser, or for any person knowingly to remove or render inoperative any such device or element of design after such sale and delivery to the ultimate purchaser; or

"(B) for any person to manufacture or sell, or offer to sell, or install, any part or component intended for use with, or as part of, any motor vehicle or motor vehicle engine, where a principal effect of the part or component is to bypass, defeat, or render inoperative any device or element of design installed on or in a motor vehicle or motor vehicle engine in compliance with regulations under this title, and where the person knows or should know that such part or component is being offered for sale or installed for such use or put to such use; or".

(2) At the end of section 203(a) (42 U.S.C. 7522(a)) insert the following: "No action with respect to any device or element of design referred to in paragraph (3) shall be treated as a prohibited act under that paragraph if (i) the action is for the purpose of repair or replacement of the device or element, or is a necessary and temporary procedure to repair or replace any other item and the device or element is replaced upon completion of the procedure, and (ii) such action thereafter results in the proper functioning of the device or element referred to in paragraph (3). No action with respect to any device or element of design referred to in paragraph (3) shall be treated as a prohibited act under that paragraph if the action is for the purpose of a conversion of a motor vehicle for use of a clean alternative fuel (as defined in this title) and if such vehicle complies with the applicable standard under section 202 when operating on such fuel, and if in the case of a clean alternative fuel vehicle (as defined by rule by the Administrator), the device or element is replaced upon completion of the conversion procedure and such action results in proper functioning of the device or element when the motor vehicle operates on conventional fuel.".

(c) Civil and Administrative Penalties.-Section 205 of the Clean Air Act (42 U.S.C. 7524) is amended to read as follows:

SEC. 205. CIVIL PENALTIES.

"(a) Violations.-Any person who violates sections 203(a)(1), 203(a)(4), or 203(a)(5) or any manufacturer or dealer who violates section 203(a)(3)(A) shall be subject to a civil penalty of not more than $25,000. Any person other than a manufacturer or dealer who violates section 203(a)(3)(A) or any person who violates section 203(a)(3)(B) shall be subject to a civil penalty of not more than $2,500. Any such violation with respect to paragraph (1), (3)(A), or (4) of section 203(a) shall constitute a separate offense with respect to each motor vehicle or motor vehicle engine. Any such violation with respect to section 203(a)(3)(B) shall constitute a separate offense with respect to each part or component. Any person who violates section 203(a)(2) shall be subject to a civil penalty of not more than $25,000 per day of violation.

Appendix 12

Auto Dealer Audit Findings Form and Explanations

OhioEPA
State of Ohio Environmental Protection Agency

STATEWIDE ANTI-TAMPERING PROGRAM
AUTO DEALER AUDIT FINDINGS

Contact and Title	County	Date	Time
Facility Name		Telephone ( )	
Address		Anti-Tampering Inspectors, Agency	
City	ZIP		

Type of Dealership: New ☐ or Used ☐	Directed or Scheduled Audit	Complaint on File?
Number Vehicles Offered for Sale	Number of Vehicles Inspected	Number of Tampered Vehicles
Dealer Permit Number	Approximate Monthly Sales (in $)	
Copy of Anti-Tampering Regulation (ORC 3704.16) Presented?	Other Anti-Tampering Information Presented (please list)	

VEHICLE TAMPERING REPORT

	Tag# / Fleet #	Year	Make	Model	New or Used Vehicle?
Serial (VIN) #		Transmission Type: Automatic ☐ or Manual ☐		Emission System: 49 State Canadian California	

PCV	TAC	AIR	EEC	O_2	EGR	FIR	CAT	EXHT

Description of Tampering	Place and Date of Vehicle Purchase

Tampering Corrected Yes ☐ No ☐	Date	Signature of Auditor

I understand that an audit of my facility has been conducted to determine compliance with Ohio's state-wide anti-tampering law (Ohio Revised Code Sections 3704.16 - 3704.162). I have been informed, by the Ohio EPA representatives listed above, of any vehicles offered for sale on the premises of my facility that were found to be in a tampered condition. For those vehicles identified as tampered, the missing or non-functioning emission system(s) have been listed on this form.

I understand that the tampered items on each vehicle must be corrected immediately if the vehicle is to continue to be offered for sale. If the tampered items cannot be corrected immediately, the vehicle(s) must not be offered for sale until all the tampered items are corrected. Continuing to offer for sale a vehicle that has been identified as tampered is a violation of ORC 3704.16 and shall be subject to the appropriate penalties, pursuant to ORC 3704.99.

Departure Time	Number of Pages	Recipient's Signature (Owner or Manager)

OhioEPA

State of Ohio Environmental Protection Agency

AUTO DEALER AUDIT FINDINGS (continued)

VEHICLE TAMPERING REPORT

Page _____

Tag# / Fleet #	Year	Make	Model	New or Used Vehicle?
Serial (VIN) #	Transmission Type: Automatic ☐ or Manual ☐		Emission System: 49 State Canadian California	

PCV	TAC	AIR	EEC	0_2	EGR	FIR	CAT	EXHT

Description of Tampering	Place and Date of Vehicle Purchase

Tampering Corrected Yes ☐ No ☐	Date	Signature of Auditor

Tag# / Fleet #	Year	Make	Model	New or Used Vehicle?
Serial (VIN) #	Transmission Type: Automatic ☐ or Manual ☐		Emission System: 49 State Canadian California	

PCV	TAC	AIR	EEC	0_2	EGR	FIR	CAT	EXHT

Description of Tampering	Place and Date of Vehicle Purchase

Tampering Corrected Yes ☐ No ☐	Date	Signature of Auditor

Tag# / Fleet #	Year	Make	Model	New or Used Vehicle?
Serial (VIN) #	Transmission Type: Automatic ☐ or Manual ☐		Emission System: 49 State Canadian California	

PCV	TAC	AIR	EEC	0_2	EGR	FIR	CAT	EXHT

Description of Tampering	Place and Date of Vehicle Purchase

Tampering Corrected Yes ☐ No ☐	Date	Signature of Auditor

Tag# / Fleet #	Year	Make	Model	New or Used Vehicle?
Serial (VIN) #	Transmission Type: Automatic ☐ or Manual ☐		Emission System: 49 State Canadian California	

PCV	TAC	AIR	EEC	0_2	EGR	FIR	CAT	EXHT

Description of Tampering	Place and Date of Vehicle Purchase

Tampering Corrected Yes ☐ No ☐	Date	Signature of Auditor

Auto Dealer Audit Findings Report

PCV Positive Crankcase Ventilation
This includes the entire PCV system with associated valves and hoses.

TAC Thermostatic Air Cleaner
This system includes the air filter, the air filter canister (found on some high performance vehicles), the air filter housing, the heat pipe, the heat shroud, and any associated hoses.

AIR Air Injection System
This system includes air pumps, belts, diverter (by-pass) and check valves, the pulse air system (if used), and any associated hoses or tubing.

EEC Evaporative Emission Components
This system includes the gas cap, charcoal filter canister, and any associated hoses leading to or from the canister.

O2 Oxygen Sensor and Electronic Components
This system includes any and all emission related electronic components (including computer controls and the check engine light), the oxygen sensors, and any associated wires.

EGR Exhaust Gas Recirculation System
This system includes the EGR valve, and vacuum or electronic signal lines.

FIR Fuel Inlet Restrictor
This category only includes the presence of the fuel inlet restrictor which restricts leaded gasoline nozzles from entering the gas tank.

CAT Catalytic Converter
The catalytic converter should be properly connected to the exhaust system and, if applicable, the air tube between the catalyst and the air injection system.

EXHT Exhaust Configuration
This category includes the proper installation of an exhaust system (this box will probably not be used too often.). One item that ,would be noted here would be headers that would not have holes for air rails of an air injection reaction system or holes for an oxygen sensor.

Appendix 13

Anti-Tampering Fact Sheets

FACT SHEET

Division of Air Pollution Control
May 2013

Ohio's Vehicle Anti-Tampering Law

Tampering with the emissions control systems on a vehicle creates more air pollution and can result in high repair costs. It's also illegal in Ohio. Here's what vehicle owners and buyers need to know.

An Ohio law that protects consumers from being sold tampered vehicles became effective in September 1993. It enhanced Ohio EPA's authority to enforce existing tampering-related prohibitions such as selling or installing a device on a vehicle that would damage or bypass any emission control system. The prohibitions in the law apply to vehicles sold "as is" as well as those sold with warranties.

What is tampering?

According to Revised Code section 3704.16, tampering means "to remove permanently, bypass, defeat or render inoperative, in whole or in part, any emission control system that is installed on or in a motor vehicle."

Tampering includes acts such as removing the catalytic converter from a vehicle and installing a straight pipe; removing the substrate from inside the catalytic converter ("cleaning" it out); removing an air pump or disabling the air pump by removing the air pump belt; or installing a non-standard thermostatic air cleaner.

What is illegal in Ohio?

Under state law it is illegal to knowingly sell, lease, rent or operate a vehicle in a tampered condition. Removing a pollution control device from a vehicle is illegal. Likewise, selling or installing a device that would hamper the effectiveness of any vehicle pollution control system is prohibited. Individuals — as well as car dealerships, muffler shops and repair facilities — are prohibited from tampering with a motor vehicle. If you know of someone who has tampered with a vehicle, you may file a complaint with Ohio EPA.

What remedies are available to me if I purchase a tampered vehicle?

If you purchased a tampered vehicle in Ohio, you may take independent legal action to rescind the sale and/or recover damages from the seller. In addition, you may file a complaint with Ohio EPA's Mobile Sources Section. If the vehicle was purchased from a dealer and an Ohio EPA investigation determines that further violations of the anti-tampering law have occurred, Ohio EPA can take an enforcement action against the dealer.

What should I look for when buying a used vehicle?

Before buying the vehicle, ask the seller if the vehicle meets all federal and state emission system tampering laws. You should look under the hood of the car for the Vehicle Emissions Control Information (VECI) label. This label identifies most of the emission control systems that were installed on the vehicle when it was manufactured.

Next to the VECI label should be a routing diagram that shows where on the engine some of the emission control devices are located. If the seller is familiar with the workings of a vehicle engine, have him or her show you all of the devices, including the catalytic converter. If the seller is not familiar with the vehicle's engine, ask if the vehicle can be driven to a repair facility so it can be looked over. It is a good practice to take a used vehicle you are considering buying to a repair technician you trust.

Ohio's Vehicle Anti-Tampering Law

Soon after I purchased a vehicle, the catalytic converter quit working. Was it illegal for the seller to allow me to purchase the car?

Probably not. If the converter was present and properly connected when the vehicle was sold to you, it wasn't tampered but rather most likely defective or not well maintained. Poor maintenance can result in corroded exhaust systems and converters, deteriorated hot air tubes as well as clogged air filters. Although poor maintenance does affect your vehicle's emission systems, it isn't considered tampering.

Tampering involves such acts as willfully removing the converter, air pump, computer controls, etc.; plugging the vacuum line to the exhaust gas recirculation valve or installing a dual exhaust system on a vehicle originally designed for single exhaust that had no option for dual exhaust.

If the converter is defective, you may be entitled to free warranty repairs. You may find information in the vehicle's manual, in the Vehicle Warranty Booklet, or you may contact Ohio EPA's Mobile Sources Section for additional information about the defective emission parts warranty.

Can I trade in my tampered vehicle for a new car?

When you trade in a vehicle, you actually are selling the vehicle to a dealer. Trading in a tampered vehicle therefore violates the anti-tampering law. Under this scenario, a judgment could be made requiring the sale to be rescinded and possibly requiring you to pay damages to the dealer. If the vehicle dealer sells that vehicle to someone else in the same tampered condition, the dealer, not you, would be held liable for that sale to the consumer. This does not keep the dealer from seeking legal action against you.

I purchased a used vehicle, and before I knew it was tampered, I spent a good deal of money on repairs. Can I recover any of the money spent on this vehicle?

The person that you purchased the car from should be allowed the opportunity to repair the vehicle to "as manufactured" condition or allow you to return the vehicle for a full refund. Damage amounts are awarded by a judge if the buyer decides to file a motion in court. If a judge decides that the seller knowingly sold the vehicle in a tampered condition, the seller would probably be required to repair the vehicle so that it conforms to the U.S. EPA-certified vehicle configuration of that model year or newer.

What problems might I encounter by driving a tampered vehicle?

Some motorists will remove or disconnect a damaged or non-working device believing that removing or disconnecting a pollution control device will increase gas mileage or even have no effect on a vehicle. But tampering will affect vehicle performance in a negative way.

Today's vehicles are sophisticated machines with well-integrated systems. Disabling or removing any emission control system can result in decreased performance, poor fuel economy, greater damage to other associated systems, and — in extreme cases — an inoperable vehicle. In addition, knowingly operating a tampered vehicle is a minor misdemeanor under state law.

Furthermore, if you live in a county that has or will have an automobile emissions testing program, you may have difficulty registering a tampered vehicle. Depending on the degree of tampering, a vehicle can fail the inspection and the owner can incur potentially high repair costs in order to pass inspection. Vehicles are required to comply with the program before they are registered. Also, tampering repairs do not count towards a waiver or repair cap, which are two forms of compliance.

Perhaps the best reason not to tamper with your vehicle's emission control systems is that doing so adds pollution to the air. Well maintained vehicles that are kept in their original configuration emit a small amount of pollutants. Tampered vehicles can emit well over 100 times that amount. When our vehicles are polluting as little as possible, we all can breathe a little easier.

More Information

Ohio EPA, Division of Air Pollution Control
Mobile Sources Section
P.O. Box 1049
Columbus, Ohio 43216-1049
(614) 644-3059
epa.ohio.gov/dapc/mobile.aspx

FACT SHEET

Division of Air Pollution Control
May 2013

Ohio's Vehicle Anti-Tampering Law: What Auto Dealers Should Know

Tampering with the emissions control systems on a vehicle creates more air pollution and can result in high repair costs. It's also illegal in Ohio. Here's what Ohio used car dealers need to know.

An Ohio law that protects consumers from being sold tampered vehicles became effective in September 1993. It enhanced Ohio EPA's authority to enforce existing tampering-related prohibitions such as selling or installing a device on a vehicle that would damage or bypass any emission control system. The prohibitions in the law apply to vehicles sold "as is" as well as those sold with warranties.

What is tampering?

According to Revised Code section 3704.16, tampering means "to remove permanently, bypass, defeat or render inoperative, in whole or in part, any emission control system that is installed on or in a motor vehicle."

Tampering includes acts such as removing the catalytic converter from a vehicle and installing a straight pipe; removing the substrate from inside the catalytic converter ("cleaning" it out); removing an air pump or disabling the air pump by removing the air pump belt; or installing a non-standard thermostatic air cleaner.

What is illegal in Ohio?

Under state law it is illegal to knowingly sell, lease, rent or operate a vehicle in a tampered condition. Removing a pollution control device from a vehicle is illegal. Likewise, selling or installing a device that would hamper the effectiveness of any vehicle pollution control system is prohibited. Individuals — as well as car dealerships, muffler shops and repair facilities — are prohibited from tampering with a motor vehicle. If you know of someone who has tampered with a vehicle, you may file a complaint with Ohio EPA.

What remedies are available to me if I purchase a tampered vehicle from a wholesaler or auctioneer?

If you purchased a tampered vehicle from a wholesaler in Ohio, you may take independent legal action to rescind the sale and/or recover damages from the seller. In addition, you may file a complaint with Ohio EPA's Mobile Sources Section. If the vehicle was purchased from a wholesaler and an Ohio EPA investigation determines that further violations of the anti-tampering law have occurred, Ohio EPA can take an enforcement action against the wholesaler.

Is there a special procedure I should follow if I want to sell a tampered vehicle to a salvage dealer for parts?

Not if the dealer is a licensed *salvage* dealer. The Bureau of Motor Vehicles only allows individuals with salvage dealer licenses to apply for and receive salvage certificates of title. Vehicles with salvage certificates of title are exempt from the provisions of the anti-tampering law. Be sure that the dealer you sell the tampered vehicle to has a salvage dealer license *and* that he or she intends to obtain a salvage certificate of title for the vehicle. It's a good idea to get this in writing. Following the above procedure will make it clear that you intend to comply with the anti-tampering law.

Is it illegal to sell high-performance vehicles or race vehicles?

Vehicles that are used solely for racing – meaning they are only driven on a track and towed or transported on a trailer to race tracks – may be sold in a modified condition if - and only if – the new owner intends to use the vehicle for racing. It's a good idea to have the buyer sign a statement agreeing that he or she intends to drive the vehicle only on race courses. Staff at the Mobile Sources Section's anti-tampering program can assist you in drafting language for an appropriate statement.

Ohio's Vehicle Anti-Tampering Law: What Auto Dealers Should Know

Vehicles that have been modified and are in a tampered condition cannot be sold if they are driven on the roadways, *even only for a short distance*. This type of vehicle should be returned to the manufacturer's specifications before selling or operating it.

Should I take a tampered vehicle as a customer trade-in for a new vehicle?

No. Because the trade-in transaction is considered a sale, this act would violate the anti-tampering law. If a customer offers you a tampered vehicle in trade, you should tell the customer that the tampered emissions control systems must be repaired prior to accepting the vehicle. You may offer to repair the vehicle – if you have the ability to do so – and work out the repair costs as part of the trade-in agreement.

How can I protect myself from a customer falsely accusing me of selling a tampered vehicle?

In Revised Code Section 3704.162 (C)(1), the law allows reasonable reimbursement of attorney's fees if the court finds the complainant has brought or maintained a groundless action. Reimbursement of attorney fees also may be awarded if the action was filed in bad faith or if the complainant tampered with the vehicle after purchasing the vehicle. To protect yourself from the ramifications of selling, or being accused of selling, a tampered vehicle, you may want to develop a checklist of emission control systems that you and the consumer can go over prior to vehicle purchase.

There are at least three companies in the U.S. that produce manuals containing emission control tables for most makes and models of foreign and domestic vehicles. These manuals are good resources for repair technicians and vehicle dealers concerned about the federal and state anti-tampering laws. You may contact Ohio EPA's Mobile Sources Section for further information about these manuals.

I sold a customer a used vehicle and a few days later the air pump belt fell off. Am I guilty of selling a tampered vehicle because of that belt?

A deteriorated air pump belt is considered a malmaintained item and not a tampered item because the belt was present at the time of sale – even though it probably was in poor condition. The new owner is responsible for replacement cost of this item if it's not under warranty.

Another situation that might be considered malmaintainance is a converter that has lost its effectiveness. If the converter is still on the vehicle and it has not been hollowed or cleaned out, it would not be considered tampered. If the converter interior has been removed, the vehicle is tampered. If a converter has been jarred by a rock rendering the inside components inoperative, this would be considered malmaintenance.

Someone came onto my car lot in the middle of the night and cut off and stole quite a few catalytic converters. Since the cost to replace all of them is quite high, may I just put straight pipes on them and sell them "as-is"?

No. That action would be considered illegal on a state and federal level for the act of tampering and again on a state level for selling tampered vehicles. In order to sell these vehicles in the state of Ohio, you would need to have catalytic converters installed on each vehicle.

More Information

Ohio EPA, Division of Air Pollution Control
Mobile Sources Section
P.O. Box 1049
Columbus, Ohio 43216-1049
(614) 644-3059
epa.ohio.gov/dapc/mobile.aspx

Appendix 14

Sample Warning Letter

Appendix 14

(Date) Certified Mail

(Name), (Title)
(Name of Facility)
(Address)

Re: Warning Letter

Dear Mr. or Mrs. (Name):

On (Date), a representative from Ohio EPA inspected the above named facility owned or operated by you to determine compliance with the requirements contained in Ohio Administrative Code (OAC) Chapter 3745-80 regarding the sale or offering for sale of motor vehicles. During the inspection, (Number of tampered vehicles) vehicles offered for sale at your facility were identified as having tampered emission systems. Knowingly offering for sale a vehicle which has been tampered with is a violation of OAC rule 3745-80-02 (E). A form noting the vehicles inspected that contains a description of any tampering discovered was presented to you after the inspection on (Date of inspection). A copy of this form is enclosed.

The tampering discovered on the motor vehicles noted in the enclosed document should be corrected within thirty (30) days of the above-noted inspection date. Written confirmation that the above-mentioned vehicles have been repaired or properly salvaged shall be sent within fourteen (14) days of the completion of repairs or salvage to:

(Name and Address)

Please note that this Warning Letter does not constitute a waiver of Ohio EPA=s ability to pursue further enforcement action concerning these or other violations or to seek civil penalties as provided in Revised Code Chapter 3704.

If you have any further questions, or require additional information concerning this situation, please do not hesitate to contact me at (Your phone number).

Sincerely,

Enc.

cc: (Current Central Office Anti-Tampering Coordinator) - Phil Ritz, DAPC/MSS

Appendix 15

Sample Notice of Violation Letter

Appendix 15

(Date) **CERTIFIED MAIL**

(Owner/Operator)
(Address)

Re: Notice of violation of air pollution control requirements for *

Dear

My staff has informed me that (Respondent) has violated and is continuing to violate the requirements of R.C. 3704.16(B)(5) and R.C. 3704.161(A)(1) at its facility located at (address/location of violation). R.C. 3704.16(B)(5) states that no person shall refuse to permit the director or his designee to inspect any motor vehicle or documents as provided in R.C.l3704.161(A)(1). R.C. 3704.161(A)(1) states that the director or his authorized representative may inspect, during normal business hours, any motor vehicle or documents located at the premises owned or operated by any person engaged in the sale, lease, or rental of motor vehicles, to determine compliance with R.C. 3704.16 to 3704.162 and the rules adopted thereunder.

The purpose of this letter is to inform (Respondent) that it was observed offering for sale, lease, and/ore rental motor vehicles found to be in a tampered condition and to request that (Respondent) immediately cease offering such vehicles for sale or display until such time as each tampered motor vehicle is determined by the director to be in a condition that does not violate R.C. 3704.16.

Background:

On (Date), a representative from the (Agency),

Action Requested:

*
*
*

Please note that this Notice of Violation does not constitute a waiver of Ohio EPA=s ability to pursue further enforcement action concerning these or other violations or to seek penalties as in R.C. Chapter 3704.

If you have any questions, or require further information please contact (Name) at (Phone) or (Name) of my legal office at (phone).

Sincerely,

(Current Director) - Scott Nally, Director

cc: (Current Central Office Enforcement Coordinator) - Bruce Weinberg, DAPC
(Current Central Office Anti-Tampering Coordinator) - Phil Ritz, DAPC/MSS
(Current Central Office Attorney) – Don Vanterpool, Legal

Extras

Can E15 Gasoline Really Damage Your Engine?

Automakers have filed a lawsuit against the EPA's decision to make E15 (gasoline with 15 percent alcohol) legal for all cars after 2007. They argue that, among other problems, the blend could damage the engine. Wait, moonshiners used to run their cars on 190-proof hooch. Can ethanol really do damage to an engine? Yes. Here's how.

By Mike Allen

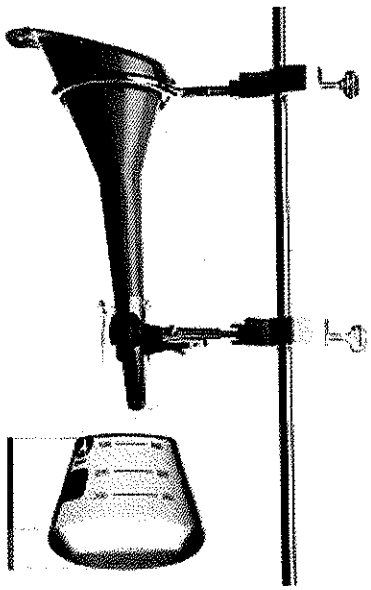

This flask had 10% ethanol and high water content. Adding just a few drops of water caused all the water and alcohol to separate, forming incombustible glop on the bottom. (Photo by Plamen Petkov)

Most people realize that all of us burn gasohol—a mixture of gasoline and alcohol—in our cars. Just about every gallon of gas pumped today contains as much as 10 percent domestically produced ethanol. Gummed-up fuel systems, damaged tanks and phase separation caused by stray moisture infiltrating fuel systems have plagued many consumers since this mixture debuted, and the problems will only get worse if government policy to increase the proportion of ethanol to gasoline is implemented. Don't get me wrong: Gasoline diluted with ethanol is a perfectly acceptable motor fuel when it's stored properly, dispensed promptly and burned in

vehicles and power equipment designed to handle it. Which, unfortunately, is not always the case.

Moonshine It's Not

That 90:10 mixture of gasoline and alcohol is referred to as E10, while a different blend of 15 percent gas and 85 percent alcohol is sold regionally as E85. On this scale, straight petroleum-based gasoline is referred to as E0. Most gasoline dispensed from pumps in this country is as much as 10 percent ethanol, distilled from corn grown in the Midwest. This alcoholic cocktail was originally mandated by the EPA as a replacement for MTBE (methyl tertiary butyl ether), an oxygen-bearing petroleum-sourced chemical that was added to pump gasoline starting in 1979 to reduce carbon monoxide emissions in some regions that had problems meeting government air-quality standards. The oxygen in the MTBE (and ethanol) molecules can substantially reduce CO emissions in vehicles without modern closed-loop fuel-injection systems, which were introduced starting in the '80s.

Soon after, MTBE started turning up in groundwater, affecting the taste and smell of drinking water, so ethanol was substituted. (Shockingly, MTBE isn't considered toxic or even carcinogenic in the concentrations found in groundwater, but still.)

However: If the beneficial effects of oxygenated fuel have largely been bypassed by modern feedback-loop injection systems, which control the air-to-fuel ratio much more closely, why is ethanol still in your fuel? Because the second President Bush made a decision to offset some of our dependence on foreign oil with domestically produced alcohol, and the Corn Belt senators agreed. Ethanol plants have mushroomed, ramping up U.S. production from 1.77 billion gallons in 2001 to 10.75 billion gallons in 2009. Politics aside, odds are near 100 percent that there's as much as 10 percent alcohol in the gasoline you're pumping into your car and that 5-gallon can you use to fuel all your other gas engines.

Keeping Water Where It Belongs

The ethanol in your gas tank is uniformly dissolved in the gasoline. Alcohol tends to absorb and hold water, and in concentrations in the tank up to about 0.6 percent, any water remains in solution, presenting no problems. (Yes, there are other problems with alcohol in the fuel system, but we'll get to them later.) How does water get into the fuel tank? It's possible that water dripped into the tank at the gas station or refueling depot, or a stray raindrop or snowflake made its way into your tank or jerrycan, but most water infiltration is from condensation. As the temperature in a tank changes, air has to be vented in and out or the tank will bulge or split. Incoming air carries moisture. When the H2O in the gas gets above a critical percentage—its saturation point—all of the water and alcohol drops out and settles into the bottom of the tank. This is what chemists call phase separation; the various components of the fuel are no longer a homogeneous mixture.

But phase separation does not occur only from increased water concentration, which is actually unlikely in a modern, emissions-sealed automotive fuel system. The temperature of the fuel is a

factor as well. Here's the scenario: You fill up the car or gas can with fuel that, for a variety of reasons, is near its water-saturation point and at 60 degrees. Overnight, the temperature drops 20 degrees, and all the water and alcohol settle out even though no extra water has crept in. Guess what? The engine won't run when the fuel pickup is sucking up the alcohol–water mix.

Worse yet, the gasoline remaining above the water has probably lost three octane points, because today's gasoline relies heavily on the high-octane equivalence (130) of alcohol to achieve its octane rating. It's also missing a bunch of additives that stayed in the alcohol—so the entire tankful should be drained and disposed of as hazardous waste.

And no, adding more alcohol, in the form of fuel-line de-icer, lacquer thinner or cheap vodka will never restore that gasoline to usefulness. You don't want to add yet more alcohol, lest the increased concentration turns your carburetor float to Jell-O. The only acceptable way to attempt to save the gas in the tank is to add a large amount of gasoline that's got a very low moisture content. Problem is, there's no good way to tell if pump gas has a little or a lot of water on board. You stand the chance of having twice as much phase-separated, unusable gasoline as before. Better to dispose of the whole tankful.

Other Alcohol Issues

Alcohol is corrosive and can degrade plastic, rubber or even metal parts in the fuel system that weren't engineered to use alcohol-bearing fuel. Consequently, that antique Evinrude outboard or '60s lawn tractor you bought at the swap meet might need some upgrading to stay together on today's gas. That means corrosion-resistant tanks, alcohol-tolerant rubber lines, seals and fuel-pump diaphragms, and plastic fuel-system parts that won't swell up in the presence of alcohol. Vintage boats with internal fiberglass tanks often have issues with the coating inside the tank failing, sometimes requiring massive structural modifications. Highly tuned two-stroke engines will run leaner (and consequently hotter) on the lower Btu/gallon alcohol mix, potentially leading to melted pistons and scuffed cylinder walls. Alcohol will also scour varnish and deposits out of the fuel system that have remained in place for years, which will eventually wind up in the filter or main jet, choking off the engine's fuel supply. Worse yet, the alcohol itself oxidizes in the tank and produces a tenacious brown glop that's far more damaging to fuel systems than the varnish we're used to seeing in pure petroleum fuels. In warmer weather, you can see varnish starting to form within a month of dispensing fresh fuel into a vehicle tank or storage can.

Advice

The common question I get: Where can I buy alcohol-free gasoline? You probably can't, except at a very few stations, and odds are it's very expensive high-octane racing fuel that's not legal for road use.

To avoid phase separation, avoid long-term fuel storage. Trash that old 5-gallon can with the rag stuffed into the filler neck and trade up to a 2-gallon can with a decent, vented cap. I used to recommend storing outdoor power equipment, boats, ATVs and motorcycles with full tanks to prevent rusting. Now I recommend draining the tank, running the engine till it quits and then fogging the inside of the tank and the cylinder with oil to prevent corrosion. No E10 in the tank equals no water absorption and no phase separation.

We've always recommended using fuel-stabilizer products for gas-powered vehicles or tools that aren't regularly used. E10 makes that advice even more compelling. We've tried products formulated for blended gasoline from Star Tron, Eastwood and Sta-Bil. There are others. Beware of products that claim to prevent phase separation: It's unlikely that they can eliminate the phenomenon, although some products do claim to delay it.

And why on earth do we need E15?

It's the Blend Wall. By passing the Energy Independence and Security Act of 2007, Congress mandated that 15 billion gallons of corn ethanol be blended into the nation's gasoline supply by 2015. Last year's U.S. production of 11 billion gallons will ramp up to 22 billion by 2012. The amount of alcohol in gas must therefore be increased. Jeff Broin, CEO of Sioux Falls, S.D.–based Poet, the nation's largest ethanol producer, says that the ethanol industry would like to increase that 15 percent to 20 percent—or more.

All of which is okay in vehicles engineered to use it, but what about those that aren't? Broin suggests that in the future, "consumers will be able to dial up the concentration of ethanol they'd like to burn at the pump, from zero to 20 percent or more, just like they choose their octane rating today." That's exactly what those of us with older cars, tools or toys will need. Problem: Getting different blends to the consumer will require massive infrastructure changes. Gasstation owners will have to upgrade existing pumps to handle E15 and higher concentrations. The blending pumps Broin is suggesting will cost more than a typical $20,000 conventional unit. In addition, station owners will have to install more tanks. An energy policy that mandates more domestic production sounds like a great idea. But sneaking more ethanol into the supply stream at the expense of people who rely on their cars, boats and outdoor power equipment might better be left to the marketplace and not to bureaucrats.

Business

White House Rethinks Biofuel Mandate

Nov. 15, 2013 8:30pm Becket Adams

Related:

Barack Obama,
Energy,
Global Warming,
White House

WASHINGTON (TheBlaze/AP) — The Obama administration on Friday proposed to reduce the amount of ethanol in the nation's fuel supply for the first time, acknowledging that the biofuel law championed by both parties in 2007 is not working as well as expected.

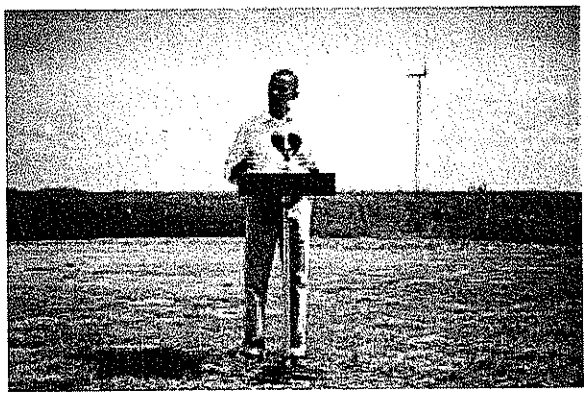

Getty Images.

Friday's announcement comes just days after The Associated Press released a major report on the long-term damage the Obama-backed ethanol mandate has caused to the environment.

While the proposal highlights the government's struggle to ramp up production of homegrown biofuels that are cleaner-burning than gasoline, it is unlikely to mean much for consumers at the pump.

The change would reduce by almost 3 billion gallons the amounts of ethanol and other biofuels blended into gasoline in 2014 than the law requires.

The 2007 law tried to address so-called "global warming," reduce dependence on foreign oil and prop up the rural economy by requiring oil companies to blend billions of gallons of biofuels into their gasoline each year. But politicians who wrote the law didn't anticipate fuel economy to improve as much as it has in recent years, which reduced demand for gasoline.

Meanwhile, next-generation biofuels, made from agricultural waste such as wood chips and corncobs, have not taken off as quickly as Congress required and the administration expected.

President Barack Obama has championed biofuels since his days representing Illinois in the Senate. His administration has vigorously resisted calls to lower biofuel volumes or repeal the law, despite the fact that they have negatively impacted fuel and food costs.

EPA officials said they were still committed to alternative fuels as part of a comprehensive energy strategy. If the EPA stuck to the volumes mandated by law, the amount of biofuel required would generate more ethanol than many engines can safely handle, officials said.

"We have made great progress in recent years, and EPA continues to support the RFS goal of increasing biofuel production and use," EPA Administrator Gina McCarthy, referring to the 2007 law called the Renewable Fuel Standard.

Biofuel supporters, however, said the proposal marked a departure for the Obama administration.

"This is the first time that the Obama administration has shown any sign of wavering," said Brooke Coleman, executive director of the Advanced Ethanol Council.

Bob Dinneen, the head of the Renewable Fuels Association, the Washington group that lobbies on behalf of the ethanol industry, said the announcement is ill-timed as the country is currently harvesting a record corn crop. He said the industry may sue if the proposal is not altered.

"This is exactly the wrong time to be reducing the required volumes of renewable fuels," Dinneen said.

The ethanol mandate created an unusual alliance between oil companies, which have seen ethanol cut into their share of the gasoline market, and environmental groups that oppose planting more corn for fuel. A recent AP investigation found that corn-based ethanol's effect on the environment is far worse than the government predicted or admits.

The oil industry lobbied hard for a reduction and is pleading with Congress to completely repeal the law.

Jack Gerard, president and CEO of the American Petroleum Institute, said the EPA's move is a step in the right direction, but "ultimately, Congress must protect consumers by repealing this outdated and unworkable program once and for all."

House Energy and Commerce Committee Chairman Fred Upton, R-Mich., said his panel is working on "comprehensive reforms" to the law.

"The status quo is no longer workable," Upton said.

Also in the proposal, the requirement for the amount of next-generation biofuels from nonfood plant sources, called cellulosic fuels, has been reduced for the fifth time in five years. The original law required 1.75 billion gallons of this fuel, which offers huge reductions in greenhouse gases compared with oil. For 2014, refiners would be required to blend 17 million gallons.

That's because companies have not yet been able to generate these fuels, which are far more complicated to produce than conventional biofuels, at high volumes. The target for next year does represent an increase from last year's 6 million gallons, though, and cellulosic fuels are the only category of biofuel to increase under the 2014 proposal. Two new cellulosic biofuel refineries are expected to begin producing fuel early next year.

(*Associated Press writer Jonathan Fahey, Dina Cappiello and Mary Clare Jalonick contributed to this report from New York.*)

—

A Discovery Company

How Two-stroke Engines Work

by Marshall Brain

Browse the article How Two-stroke Engines Work

Video: How Diesel Two Stroke Engines Work

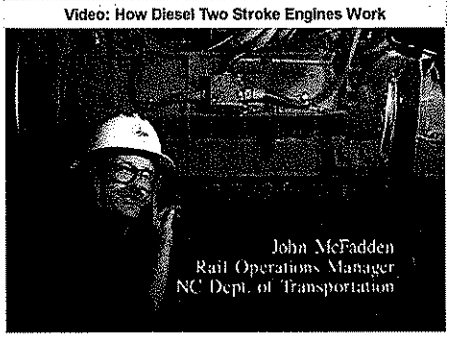

Watch this video to learn more about how diesel two-stroke engines work.
HowStuffWorks

UP NEXT

- How Car Engines Work
- How Diesel Two-stroke Engines Work
- How Diesel Engines Work

Introduction to How Two-stroke Engines Work

If you have read How Car Engines Work and How Diesel Engines Work, then you are familiar with the two types of engines found in nearly every car and truck on the road today. Both gasoline and diesel automotive engines are classified as **four-stroke reciprocating internal-combustion engines**.

There is a third type of engine, known as a **two-stroke engine**, that is commonly found in lower-power applications. Some of the devices that might have a two-stroke engine include:

- Lawn and garden equipment (chain saws, leaf blowers, trimmers)
- Dirt bikes
- Mopeds
- Jet skis
- Small outboard motors
- Radio-controlled model planes

In this article, you'll learn all about the two-stroke engine: how it works, why it might be used and what makes it different from regular car and diesel engines.

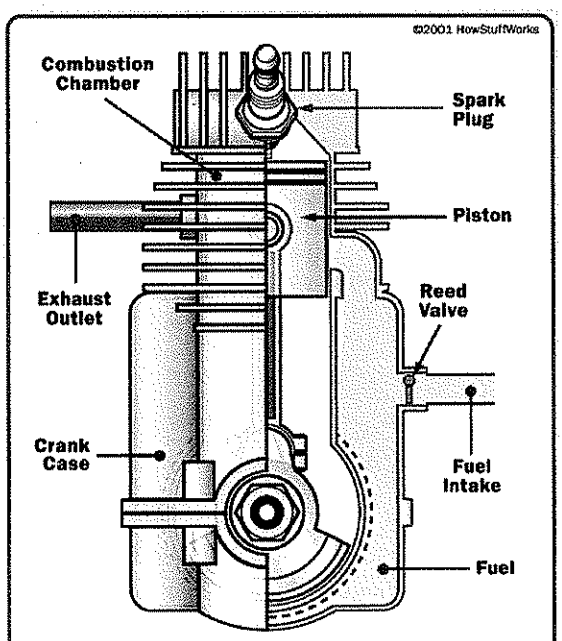

The basic components of a two-stroke engine

Two-stroke Basics

This is what a two-stroke engine looks like:

You find two-stroke engines in such devices as chain saws and jet skis because two-stroke engines have three important advantages over four-stroke engines:

- Two-stroke engines do not have valves, which simplifies their construction and lowers their weight.
- Two-stroke engines fire once every revolution, while four-stroke engines fire once every other revolution. This gives two-stroke engines a significant power boost.
- Two-stroke engines can work in any orientation, which can be important in something like a chainsaw. A standard four-stroke engine may have problems with oil flow unless it is upright, and solving this problem can add complexity to the engine.

These advantages make two-stroke engines lighter, simpler and less expensive to manufacture. Two-stroke engines also have the potential to pack about twice the power into the same space because there are twice as many power strokes per revolution. The combination of light weight and twice the power gives two-stroke engines a great **power-to-weight ratio** compared to many four-stroke engine designs.

You don't normally see two-stroke engines in cars, however. That's because two-stroke engines have a couple of significant disadvantages that will make more sense once we look at how it operates.

UP NEXT

- How Car Engines Work
- How Diesel Two-stroke Engines Work
- How Diesel Engines Work

The Two-stroke Cycle

UP NEXT

- How Car Engines Work
- How Diesel Two-stroke Engines Work
- How Diesel Engines Work

The following animation shows a two-stroke engine in action. You can compare this animation to the animations in the car engine and diesel engine articles to see the differences. The biggest difference to notice when comparing figures is that the **spark-plug fires once every revolution** in a two-stroke engine.

This figure shows a typical **cross flow** design. You can see that two-stroke engines are ingenious little devices that overlap operations in order to reduce the part count.

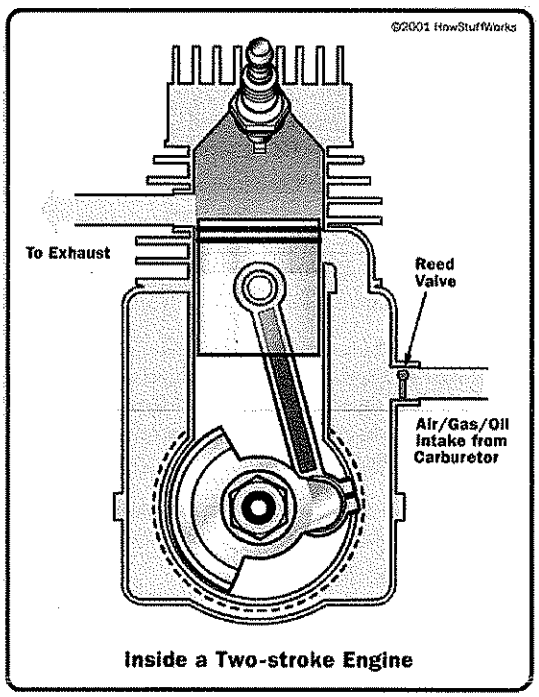

Inside a Two-stroke Engine

Sparks Fly

You can understand a two-stroke engine by watching each part of the cycle. Start with the point where the **spark plug** fires. Fuel and air in the cylinder have been compressed, and when the spark plug fires the mixture ignites. The resulting **explosion** drives the **piston** downward. Note that as the piston moves downward, it is compressing the air/fuel mixture in the crankcase. As the piston approaches the bottom of its stroke, the **exhaust port** is uncovered. The **pressure** in the cylinder drives most of the exhaust gases out of cylinder, as shown here:

UP NEXT

- How Car Engines Work
- How Diesel Two-stroke Engines Work
- How Diesel Engines Work

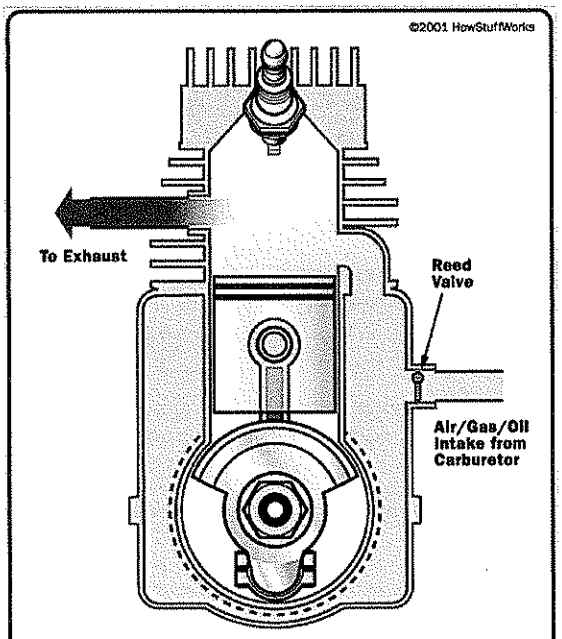

Fuel-intake position of a two-stroke engine

Fuel Intake

As the piston finally bottoms out, the **intake port** is uncovered. The piston's movement has **pressurized** the mixture in the crankcase, so it rushes into the cylinder, **displacing** the remaining exhaust gases and filling the cylinder with a fresh charge of fuel, as shown here:

Note that in many two-stroke engines that use a cross-flow design, the piston is shaped so that the incoming fuel mixture doesn't simply flow right over the top of the piston and out the exhaust port.

UP NEXT

- How Car Engines Work
- How Diesel Two-stroke Engines Work
- How Diesel Engines Work

UP NEXT

- How Car Engines Work
- How Diesel Two-stroke Engines Work
- How Diesel Engines Work

The Compression Stroke

Now the momentum in the crankshaft starts driving the piston back toward the spark plug for the **compression stroke**. As the air/fuel mixture in the piston is compressed, a **vacuum** is created in the crankcase. This vacuum opens the **reed valve** and sucks air/fuel/oil in from the **carburetor**.

Once the piston makes it to the end of the compression stroke, the spark plug fires again to repeat the cycle. It's called a two-stoke engine because there is a **compression stroke** and then a **combustion stroke**. In a four-stroke engine, there are separate intake, compression, combustion and exhaust strokes.

You can see that the piston is really doing three different things in a two-stroke engine:

- On one side of the piston is the **combustion chamber**, where the piston is compressing the air/fuel mixture and capturing the energy released by the ignition of the fuel.
- On the other side of the piston is the **crankcase**, where the piston is creating a vacuum to suck in air/fuel from the carburetor through the reed valve and then pressurizing the crankcase so that air/fuel is forced into the combustion chamber.
- Meanwhile, the sides of the piston are acting like **valves**, covering and uncovering the intake and exhaust ports drilled into the side of the cylinder wall.

It's really pretty neat to see the piston doing so many different things! That's what makes two-stroke engines so simple and lightweight.

If you have ever used a two-stroke engine, you know that you have to mix special **two-stroke oil** in with the gasoline. Now that you understand the two-stroke cycle you can see why. In a four-stroke engine, the crankcase is completely separate from the combustion chamber, so you can fill the crankcase with heavy oil to lubricate the crankshaft bearings, the bearings on either end of the piston's connecting rod and the cylinder wall. In a two-stroke engine, on the other hand, the crankcase is serving as a **pressurization chamber** to force air/fuel into the cylinder, so it can't hold a thick oil. Instead, you mix oil in with the gas to lubricate the crankshaft, connecting rod and cylinder walls. If you forget to mix in the oil, the engine isn't going to last very long!

Disadvantages of the Two-stroke

You can now see that two-stroke engines have two important advantages over four-stroke engines: They are simpler and lighter, and they produce about twice as much power. So why do cars and trucks use four-stroke engines? There are four main reasons:

- Two-stroke engines don't last nearly as long as four-stroke engines. The lack of a dedicated lubrication system means that the parts of a two-stroke engine wear a lot faster.

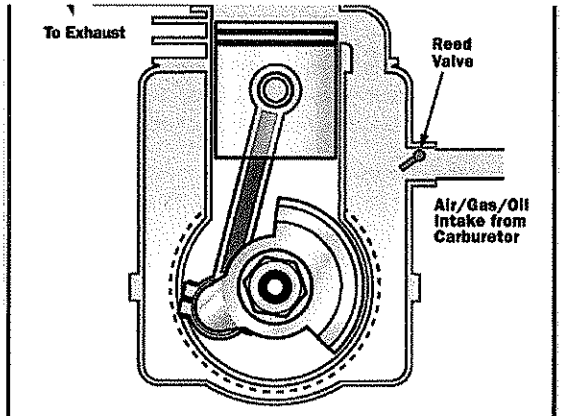

Compression action of a two-stroke engine

UP NEXT

- How Car Engines Work
- How Diesel Two-stroke Engines Work
- How Diesel Engines Work

- Two-stroke oil is expensive, and you need about 4 ounces of it per gallon of gas. You would burn about a gallon of oil every 1,000 miles if you used a two-stroke engine in a car.
- Two-stroke engines do not use fuel efficiently, so you would get fewer miles per gallon.
- Two-stroke engines produce a lot of pollution -- so much, in fact, that it is likely that you won't see them around too much longer. The **pollution** comes from two sources. The first is the combustion of the oil. The oil makes all two-stroke engines smoky to some extent, and a badly worn two-stroke engine can emit huge clouds of oily smoke. The second reason is less obvious but can be seen in the following figure:

Each time a new charge of air/fuel is loaded into the combustion chamber, part of it **leaks out** through the exhaust port. That's why you see a sheen of oil around any two-stroke boat motor. The leaking hydrocarbons from the fresh fuel combined with the leaking oil is a real mess for the environment.

These disadvantages mean that two-stroke engines are used only in applications where the motor is not used very often and a fantastic power-to-weight ratio is important.

In the meantime, manufacturers have been working to shrink and lighten four-stroke engines, and you can see that research coming to market in a variety of new marine and lawn-care products.

For more information on two-stroke engines and related topics, check out the links on the next page.

UP NEXT

- How Car Engines Work
- How Diesel Two-stroke Engines Work
- How Diesel Engines Work

Lots More Information

Related HowStuffWorks Articles

- How Diesel Two-Stroke Engines Work
- How Car Engines Work
- How Diesel Engines Work
- How Gas Turbine Engines Work
- How Rotary Engines Work
- How Rocket Engines Work
- How the Aptera Hybrid Works
- How Chain Saws Work
- How Gasoline Works
- How Ozone Pollution Works

More Great Links

- Small-Engine Emissions Research
- Basic Two-stroke Tuning
- How Two-Stroke Expansion Chambers Work, and Why You Should Care
- Expansion Chambers: Exhaust Pipe "Theory"
- Two-Stroke Technology

How Diesel Engines Work

by Marshall Brain

Browse the article How Diesel Engines Work

Image Gallery: Diesel Engines

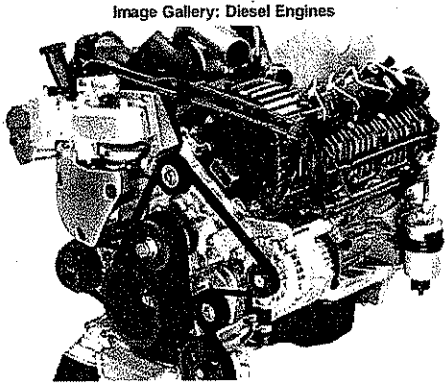

The 4.5-liter V-8 Duramax improves efficiency by 25 percent when compared with gasoline engines, while reducing pollutants and emissions. See more diesel engine pictures.
2008 HowStuffWorks

UP NEXT

- Diesel Quiz
- How Biodiesel Works
- How Diesel Hybrids Work

Introduction to How Diesel Engines Work

One of the most popular HowStuffWorks articles is How Car Engines Work, which explains the basic principles behind internal combustion, discusses the four-stroke cycle and talks about all of the subsystems that help your car's engine to do its job. For a long time after we published that article, one of the most common questions asked (and one of the most frequent suggestions made in the suggestion box) was, "What is the difference between a gasoline and a diesel engine?"

Diesel's story actually begins with the invention of the **gasoline engine**. Nikolaus August Otto had invented and patented the gasoline engine by 1876. This invention used the four-stroke combustion principle, also known as the "Otto Cycle," and it's the basic premise for most car engines today. In its early stage, the gasoline engine wasn't very efficient, and other major methods of transportation such as the **steam engine** fared poorly as well. Only about 10 percent of the fuel used in these types of engines actually moved a vehicle. The rest of the fuel simply produced useless heat.

In 1878, Rudolf Diesel was attending the Polytechnic High School of Germany (the equivalent of an engineering college) when he learned about the low efficiency of gasoline and steam engines. This disturbing information inspired him to create an engine with a **higher efficiency**, and he devoted much of his time to developing a "Combustion Power Engine." By 1892 Diesel had obtained a patent for what we now call the diesel engine.

If diesel engines are so efficient, why don't we use them more often? You might see the words "diesel engine" and think of big, hefty cargo trucks spewing out black, sooty smoke and creating a loud clattering noise. This negative image of diesel trucks and engines has made diesel less attractive to casual drivers in the United States -- although diesel is great for hauling large shipments over long distances, it hasn't been the best choice for everyday commuters. This is starting to change, however, as people are improving the diesel engine to make it cleaner and less noisy.

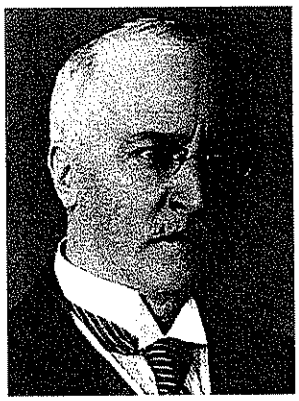

Rudolf Diesel, inventor of the diesel engine.
Hulton Archive/Getty Images

If you haven't already done so, you'll probably want to read How Car Engines Work first, to get a feel for the basics of internal combustion. But hurry back -- in this article, we unlock the secrets of the diesel engine and learn about some new advancements.

COMPRESSION
When working on his calculations, Rudolf Diesel theorized that higher compression leads to higher efficiency and more power. This happens because when the piston squeezes air with the cylinder, the air becomes concentrated. Diesel fuel has a high energy content, so the likelihood of diesel reacting with the concentrated air is greater. Another way to think of it is when air molecules are packed so close together, fuel has a better chance of reacting with as many oxygen molecules as possible. Rudolf turned out to be right -- a gasoline engine compresses at a ratio of 8:1 to 12:1, while a diesel engine compresses at a ratio of 14:1 to as high as 25:1.

UP NEXT

- Diesel Quiz
- How Biodiesel Works
- How Diesel Hybrids Work

Diesel Engines vs. Gasoline Engines

In theory, diesel engines and gasoline engines are quite similar. They are both **internal combustion engines** designed to convert the chemical energy available in fuel into mechanical energy. This mechanical energy moves pistons up and down inside cylinders. The pistons are connected to a crankshaft, and the up-and-down motion of the pistons, known as linear motion, creates the rotary motion needed to turn the wheels of a car forward.

Both diesel engines and gasoline engines covert fuel into energy through a series of small explosions or combustions. The major difference between diesel and gasoline is the way these explosions happen. In a gasoline engine, fuel is mixed with air, compressed by pistons and ignited by sparks from spark plugs. In a diesel engine, however, the air is compressed first, and then the fuel is injected. Because air heats up when it's compressed, the fuel ignites.

The following animation shows the diesel cycle in action. You can compare it to the animation of the gasoline engine to see the differences.

Image courtesy Baris Mengutay

The diesel engine uses a four-stroke combustion cycle just like a gasoline engine. The four strokes are:

- **Intake stroke** -- The intake valve opens up, letting in air and moving the piston down.
- **Compression stroke** -- The piston moves back up and compresses the air.
- **Combustion stroke** -- As the piston reaches the top, fuel is injected at just the right moment and ignited, forcing the piston back down.
- **Exhaust stroke** -- The piston moves back to the top, pushing out the exhaust created from the combustion out of the exhaust valve.

Remember that the diesel engine has no spark plug, that it intakes air and compresses it, and that it then injects the fuel directly into the combustion chamber (direct injection). It is the heat of the compressed air that lights the fuel in a diesel engine. In the next section, we'll examine the diesel injection process.

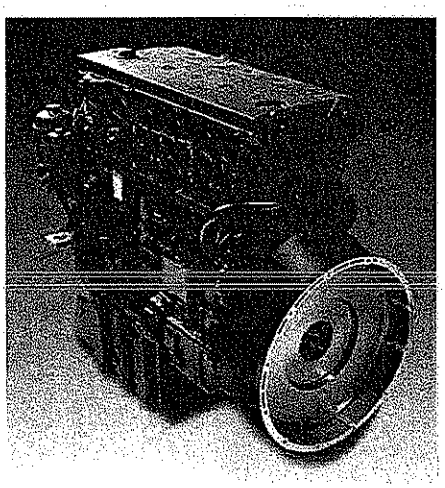

Photo courtesy DaimlerChrysler Atego six-cylinder diesel engine

Diesel Fuel Injection

One big difference between a diesel engine and a gas engine is in the injection process. Most car engines use port injection or a carburetor. A port injection system injects fuel just prior to the intake stroke (outside the cylinder). A carburetor mixes air and fuel long before the air enters the cylinder. In a car engine, therefore, all of the fuel is loaded into the cylinder during the intake stroke and then compressed. The compression of the fuel/air mixture limits the compression ratio of the engine -- if it compresses the air too much, the fuel/air mixture spontaneously ignites and causes **knocking**. Because it causes excessive heat, knocking can damage the engine.

Diesel engines use direct fuel injection -- the diesel fuel is injected directly into the cylinder.

The injector on a diesel engine is its most complex component and has been the subject of a great deal of experimentation -- in any particular engine, it may be located in a variety of places. The injector has to be able to withstand the temperature and pressure inside the cylinder and still deliver the fuel in a fine mist. Getting the mist circulated in the cylinder so that it is evenly distributed is also a problem, so some diesel engines employ special induction valves, pre-combustion chambers or other devices to swirl the air in the combustion chamber or otherwise improve the ignition and combustion process.

Some diesel engines contain a **glow plug**. When a diesel engine is cold, the compression process may not

UP NEXT

- Diesel Quiz
- How Biodiesel Works
- How Diesel Hybrids Work

raise the air to a high enough temperature to ignite the fuel. The glow plug is an electrically heated wire (think of the hot wires you see in a toaster) that heats the combustion chambers and raises the air temperature when the engine is cold so that the engine can start. According to Cley Brotherton, a Journeyman heavy equipment technician:

All functions in a modern engine are controlled by the ECM communicating with an elaborate set of sensors measuring everything from R.P.M. to engine coolant and oil temperatures and even engine position (i.e. T.D.C.). Glow plugs are rarely used today on larger engines. The ECM senses ambient air temperature and retards the timing of the engine in cold weather so the injector sprays the fuel at a later time. The air in the cylinder is compressed more, creating more heat, which aids in starting.

Smaller engines and engines that do not have such advanced computer control use glow plugs to solve the cold-starting problem.

Of course, mechanics aren't the only difference between diesel engines and gasoline engines. There's also the issue of the fuel itself.

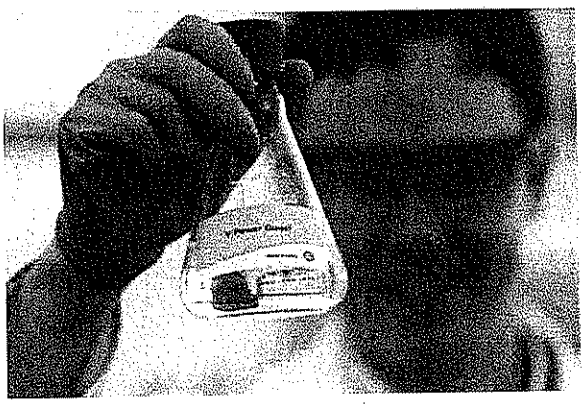

A sample of diesel fuel
Staff/Getty Images

UP NEXT

- Diesel Quiz
- How Biodiesel Works
- How Diesel Hybrids Work

Diesel Fuel

Petroleum fuel starts off as crude oil that's naturally found in the Earth. When crude oil is processed at refineries, it can be separated into several different kinds of fuels, including gasoline, jet fuel, kerosene and, of course, diesel.

If you have ever compared diesel fuel and gasoline, you know that they are different. They certainly smell different. Diesel fuel is heavier and oilier. It evaporates much more slowly than gasoline -- its boiling point is actually higher than the boiling point of water. You will often hear diesel fuel referred to as "diesel oil" because it's so oily.

Diesel fuel evaporates more slowly because it is heavier. It contains more carbon atoms in longer chains than gasoline does (gasoline is typically C_9H_{20}, while diesel fuel is typically $C_{14}H_{30}$). It takes less refining to create diesel fuel, which is why it used to be cheaper than gasoline. Since 2004, however, demand for diesel has risen for several reasons, including increased industrialization and construction in China and the U.S. [source: Energy Information Administration].

Diesel fuel has a **higher energy density** than gasoline. On average, 1 gallon (3.8 L) of diesel fuel contains approximately 155×10^6 joules (147,000 BTU), while 1 gallon of gasoline contains 132×10^6 joules (125,000 BTU). This, combined with the improved efficiency of diesel engines, explains why diesel engines get better mileage than equivalent gasoline engines.

Diesel fuel is used to power a wide variety of vehicles and operations. It of course fuels the diesel trucks you see lumbering down the highway, but it also helps move boats, school buses, city buses, trains, cranes, farming equipment and various emergency response vehicles and power generators. Think about how important diesel is to the economy -- without its high efficiency, both the construction industry and farming businesses would suffer immensely from investments in fuels with low power and efficiency. About 94 percent of freight -- whether it's shipped in trucks, trains or boats -- relys on diesel.

In terms of the environment, diesel has some pros and cons. The pros -- diesel emits very small amounts of carbon monoxide, hydrocarbons and carbon dioxide, emissions that lead to global warming. The cons -- high amounts of nitrogen compounds and particulate matter (soot) are released from burning diesel fuel, which lead to acid rain, smog and poor health conditions. On the next page we'll look at some recent improvements made in these areas.

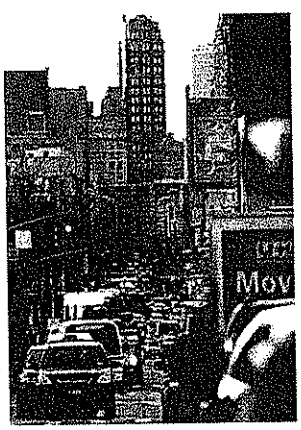

Cleaner fuel and stricter emissions levels should reduce the number of early deaths due todiesel engine pollution.
Photo courtesy Mario Tama/Getty Images

UP NEXT

Diesel Improvements and Biodiesel

During the big oil crisis in the 1970s, European car companies started advertising diesel engines for commercial use as an alternative to gasoline. Those who tried it out were a bit disappointed -- the engines were very loud, and they would arrive home to find their cars covered from front to back in black soot -- the same soot responsible for smog in big cities.

Over the past 30 to 40 years, however, vast improvements have been made on engine performance and fuel cleanliness. Direct injection devices are now controlled by advanced computers that monitor fuel combustion, increasing efficiency and reducing emissions. Better-refined diesel fuels such as ultra low sulfur diesel (ULSD) will lower the amount of harmful emissions and upgrading engines to make them compatible with cleaner fuel is becoming a simpler process. Other technologies such as CRT particulate filters and catalytic converters burn soot and reduce particulate matter, carbon monoxide and hydrocarbons by as much as 90 percent. [source: Diesel Technology Forum]. Continually improving standards for cleaner fuel from the European Union will also push the auto industries to work harder at lowering emissions -- by September 2009, the EU hopes to have particulate matter emissions down from 25mg/kilometer to 5mg/kilometer [source: EUROPA].

You may have also heard of something called biodiesel. Is it the same as diesel? Biodiesel is an alternative or additive to diesel fuel that can be used in diesel engines with little to no modifications to the engines themselves. It's not made from petroleum -- instead it comes from plant oils or animal fats that have been chemically altered. (Interesting fact: Rudolf Diesel had originally considered vegetable seed oil as fuel for his invention.) Biodiesel can either be combined with regular diesel or used completely by itself. You can read more about biodiesel in How Biodiesel Works.

For more information on diesel engines and related topics, check out the links on the next page.

This Vehicle Is NOT Being Offered For Sale At This Time

per Ohio Administrative Code 3745-80-02(E)(1) & (2)

Ohio EPA

Field Calls
Mal-Maintenance, Malfunctioning, and Tampered

Anti-Tampering Program Clarification and a Few Reminders

Ok so you're out doing a field inspection of some automobiles at a used car lot and you come across something that has you a little puzzled. You know the item you're looking at does not function but does that mean it's tampered?

You're looking at the catalytic converter and it looks really poor. It may even have some rusted out sections but it appears that the "biscuit"* is still there. Because it is not missing (the converter or the parts of the biscuit you can see through the holes) and it does not appear that someone made it inoperable, you shouldn't say that it is tampered.

This would definitely be mal-maintained and probably malfunctioning but not tampered.

If however, you can see through it and you know the "biscuit" is missing, you should mark this one down as tampered. Additionally, if you can see that the holes are manmade and the biscuit is gone, again, you'd mark this as tampered.

If there are metal patches welded on the shell in spots that seem to be where holes were and you cannot tell whether the "biscuit" is still there, you might be suspicious that it has been cleaned out and you could even make note of it on the form but you should not state that it is definitely tampered (and make them segregate it on the lot as "NOT FOR SALE").

If the catalytic converter is completely gone from underneath and you're not sure if it was taken off or if it rusted off, you should mark this as tampered as it is completely missing.

When you're out in the field and you have questions, you can try calling Ohio EPA Central Office at (800) 573-5999 and choose 4 once the scripted dialogue begins or call (614) 644-3060.

What about the Check Engine Light or malfunction Indicator Light (MIL)? If you get hold of the keys while you're doing an inspection, you check to see if the MIL comes on or not. Just because it does not turn on does not mean it is tampered. This could be just a case of a malfunctioning bulb. We cannot enforce the tampering prohibition when a light bulb burns out on its own. You would need a little more evidence to mark this as tampered on the form.

We've been told to look for a small hole in the clear plastic face of the instrument cluster. One method to tamper with the MIL is to use a long skinny drill bit to go through the plastic face and then into the bulb to disable it.

Another method to disable the MIL involves a very hot wire rod. Once the wire gets hot enough, the mechanic will slowly push it through the clear plastic face and then into the bulb to scramble it. Then when he or she withdrawals it from the plastic cover, if done

well, the plastic will reseal and no hole will be left behind. This does however leave a dimple which can be felt with your fingertip and seen with a keen eye.

If the MIL is not functioning and you find either the dimple or a small hole, you should mark this as tampered. To make absolutely sure though, you should also look at the face of the instrument cluster for some evidence that the wire or drill bit was used.

Additionally, if the MIL does not come on but you're not sure if the bulb has been tampered with, you should pay close attention to the wiring under the hood. You might find that the engine has been switched.

After any inspections you perform are completed, please send copies of all documents with a short cover letter explaining when, where, and what happened. Central Office needs to have copies of all inspections. We need to know how many times a place has been inspected and what has happened each time. This is important for all offices to do but it is especially important for those that have contracts with Ohio EPA.

Lastly, if you take a complaint over the phone, please send the Anti-Tampering Coordinator in Central Office a copy of that complaint before you go for an inspection.

* The biscuit is the ceramic honeycomb piece in the middle of the catalytic converter that has the noble metal coating and is the functional piece of this hardware.

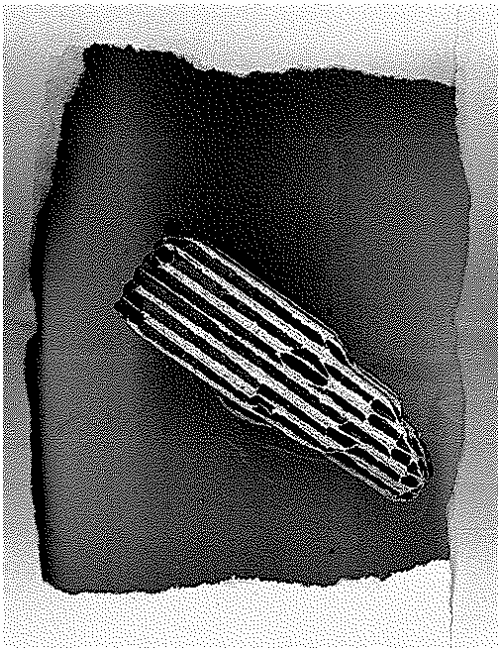

Side view

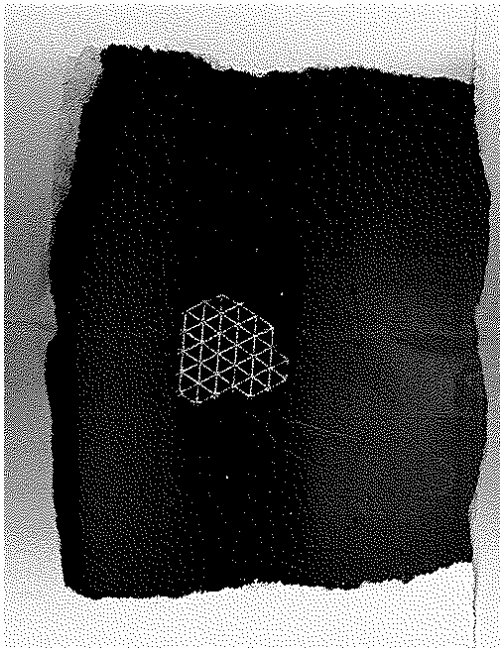

Cross sectional view
(notice the "honeycomb" type look)

Biscuit pieces shown actual size

December 2012
Phil Ritz

Generic Definitions

Tampering - removing, rendering inoperative (by-passing), modifying, altering an emissions control system or element of design such that the emissions standards are exceeded.

Malfunctioning - part failed by wasn't supposed to be replaced by the owner as stated in the owner's manual.

Malmaintenance - owner didn't do what they were supposed to do (as in manual).

Note: It's not tampering unless you're sure - would you bet the house in it?

"As Is" Definition

"As Is" - when there is a conflict of laws, such as a general law with a vehicle sold "as is" and a specific law such as "knowingly selling a tampered vehicle", the general interpretation is that specific law takes precedence. Specific is more significant than general.

http://www.bigdaddiesgarage.com/

B I G
D A D D I E S
G A R A G E

O2 SIMULATOR CEL FIX

Designed For High Performance Modified Catless Exhausts...
Turbo and Non-Turbo Engines...

1.6 thru 6.3 Litre...

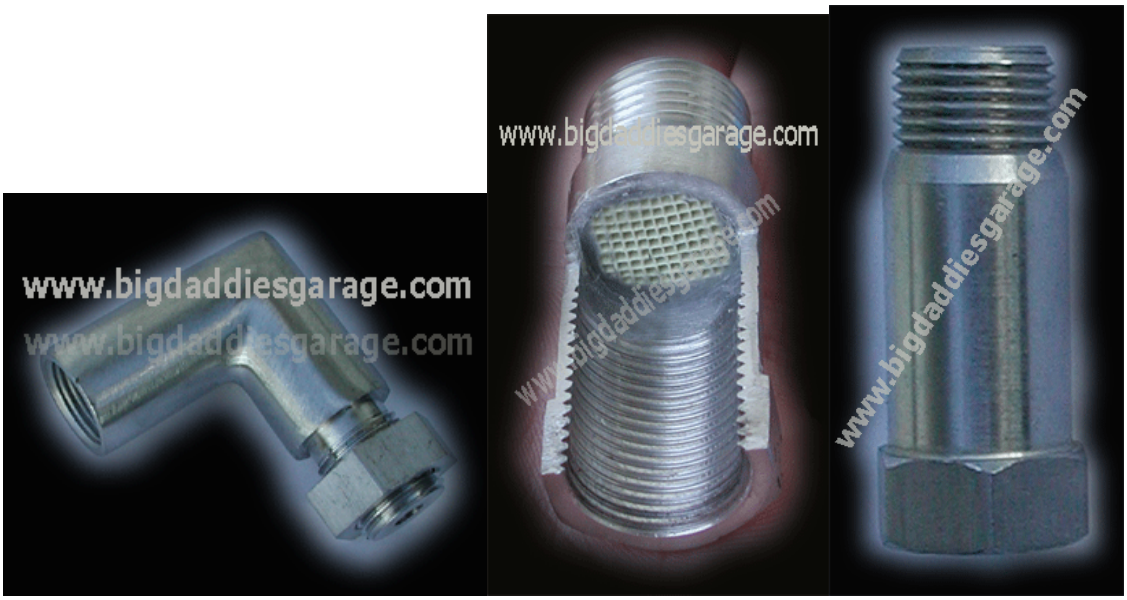

Questions...
Click to Email Us.

Angled-Cel-Fix
Mini-Cat-Cel-Fix
Straight-Cel-Fix

Speed Shops
and
Dealers

More Info, specs, details
For Tight Installs Excellent Cel Fix

More Info, specs, details
The Best Cel Fix Available.
Honeycombed Elements

More Info, specs, details
Nice, Economical Cel Fix

Precision Machined , Premium High Quality T 304 Stainless Steel

Removes Check Engine Light... No Cel EVER !!!

FREE
Shipping to all 50 States and US Territories

International Shipping
EMS Express Mail
click here

UPGRADE TO
Express Mail Shipping to
all 50 States and US Territories

Manufactured and Sold Expressly for Non-Road Vehicles Used Solely for Competition.
Racing, Modified Racing Exhaust Testing an Tuning Diagnostics ONLY.
~ ~ ~Not sold For Use On Production Street Vehicles ("on road" or "on highway" vehicles).~ ~ ~

http://www.streetdirectory.com/travel_guide/51727/engine_oil/federal_settlement_targets_illegal_emission_control.html

Federal Settlement Targets Illegal Emission Control

By: Anthony Fontanelle

The Department of Justice and U.S. Environmental Protection Agency recently announced a landmark settlement requiring Casper's Electronics, of Mundelein, Ill., to pay a penalty and stop selling devices that allow cars to release excess levels of pollution into the environment, in violation of the Clean Air Act.

The settlement requires Casper's to stop selling electronic devices dubbed as oxygen sensor simulators or "O2 Sims," to recall the devices, and pay more than $74,000 in civil penalties to the nation. An O2 Sim tricks an automobile engine's computer into sensing a properly functioning emission control system, even when the catalytic converter is missing or faulty. These "after-market" sensors are considered illegal "defeat devices" under the federal CAA.

Since 2001, Casper's has sold about 44,000 defeat devices through retailers and from its Web site. The EPA estimates that the increased emissions from installation of these devices over the life of the vehicles are 7,400 tons of hydrocarbons, 347,000 tons of carbon monoxide, and 6,000 tons of nitrogen oxides. This is equivalent to the emissions produced by a half- million cars with fully operational emission control systems.

"Emission control defeat devices, like those used here, risk harming human health and the environment by allowing huge increases in pollutants from motor vehicles," said Ronald J. Tenpas, Acting Assistant Attorney General for the Justice Department's Environment and Natural Resources Division. "The Justice Department will continue to vigorously enforce all of the provisions of the Clean Air Act -- including its rule against these devices -- against violators, including those using the Internet to illegally sell their wares."

An oxygen sensor simulator sends a false electronic signal to the car's engine control computer, preventing the "check engine" or "malfunction indicator" light from functioning. The malfunction light alerts the driver when there is a problem with the emission control system.

Casper's O2 Sims allowed vehicle owners to remove or disable the catalytic converter without the OBD system detecting the problem and turning on the check engine light. The CAA prohibits the manufacture and sale of any devices that bypass or defeat required pollution control equipment on motor vehicles. Vehicles with defeat devices can emit up to 50 times the amount of harmful pollution emitted by vehicles with properly functioning emission controls.

"Reliable and effective automobile pollution control systems are essential to protect human health and the environment from harmful automobile emissions," said Granta Nakayama, the EPA's Assistant Administrator for enforcement and compliance assurance. "Casper's sale of the oxygen sensor simulator defeat devices over a multi-year period is a serious violation because it facilitated the removal or malfunctioning of motor vehicle catalytic converters, which are the primary emission controls devices to prevent excessive pollution from cars and trucks."

The EPA is currently investigating other auto parts manufacturers and sellers that may also be making and selling comparable products. The federal agency has found that some companies are advertising O2 Sims and other defeat devices as a way to enhance auto performance.

Air emissions from cars include harmful pollutants like non-methane hydrocarbons and oxides of nitrogen, key ingredients in the production of ozone, a major component of urban smog. Tailpipe emissions also include carbon monoxide, which impairs breathing. Both ozone and carbon monoxide are especially harmful to children, people with asthma and the elderly. This is why the government intends to put to halt the emissions the like the efficient EBC Redstuff.

The mandated recall requires Casper's to implement a mandatory repurchase program under which it must notify its purchasers that the company will buy back any O2 Sims sold and create and implement a reporting system to ensure future compliance.

About The Author, Anthony Fontanelle

Anthony Fontanelle is a 35-year-old automotive.buff who grew up in the Windy City. He does freelance work for an automotive magazine when he is not busy customizing cars in his shop.

Automobile Emissions Systems Reference Guide

2013-14 Ohio EPA Anti-Tampering Program

Norm McLeod

Automobile Emissions Systems Reference Guide

Table of Contents

Preface 3

Air Cleaner (ACL) Thermostatic Type 4

Air Injection System (AIS) 5

Air Pump (AIR) System 5

Catalytic Converter (CAT) 6

Computerized Engine Controls 8

Early Fuel Evaporation (EFE) 9

ECS Maintenance Reminder Lamp or Flag 9

Emission Calibration Label 10

Evaporative Emission (EVAP) System 11

Exhaust Gas Recirculation (EGR) System 13

Fillpipe Restrictor (FR) 16

Malfunction Indicator Lamp 16

Oxygen Sensor (O2S) 17

Positive Crankcase Ventilation (PCV) System 18

Pulsed Secondary Air Injection (PAIR) System 19

Spark Control (SPK) 20

Thermal Reactor 20

Selective Catalytic Reduction 21

Vehicle Emission Control Information Label 23

Visual Inspection Procedure 26

Abbreviations & Acronyms 27

Liter/CID Conversion Chart 38

Bibliography 39

Preface

This guide has been assembled and provided to assist in the training and as reference material for those individuals assigned to perform inspections as a part of the Ohio Environmental Protection Agency's Statewide Anti-Tampering program. The images and descriptions provided are intended to give the user a general understanding of how each system appears and functions. It is important to note that each vehicle manufacturer uses their own engineering methods to satisfy the Clean Air Act requirements.

Included are descriptions of each emissions control system, a list of abbreviations and acronyms, and a liter/CID conversion chart for Metric/SAE engine displacement.

Automobile Emissions Systems Reference Guide

Air Cleaner (ACL) Thermostatic Type

The air valve in the air cleaner blends air warmed from the heat stove on the exhaust manifold with outside air. The air valve can close the opening to either air source, or blend a mixture of both depending upon operating conditions.

Air cleaner (ACL) thermostatic type

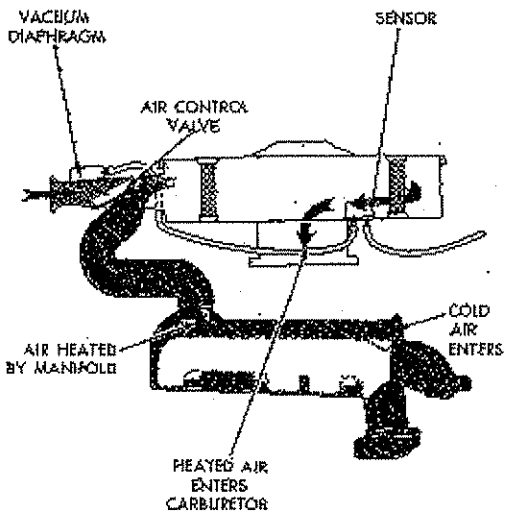

Inspect exhaust manifold shroud, hot air tube and air cleaner for proper installation, tampering and damage. Ensure all vacuum switches are properly installed and vacuum hoses are connected and properly routed.

Automobile Emissions Systems Reference Guide

Air Injection System (AIS)

The air injection system is used to reduce CO (Carbon Monoxide) and HC (Hydrocarbon) emissions by adding a controlled amount of air to the exhaust gases. This additional air causes further oxidation of the exhaust gases with an appreciable reduction in CO and HC emissions. On some models, the extra air in the exhaust gases provided by the air injection system is used to increase the efficiency of catalytic converter operation.

Air Pump (AIR) System

The air pump type system uses a belt driven vane type pump which usually mounts to the front of the engine. The system may include a check valve, a bypass or diverter valve, air tubes or manifold and check valves to route the air to the engines exhaust ports. Some engines use internally drilled passages to deliver the air to the ports. On models equipped with a catalytic converter, a vacuum differential valve may also be used. Some models such as heavy duty trucks may use more than one air pump.

Typical pump type air injection system

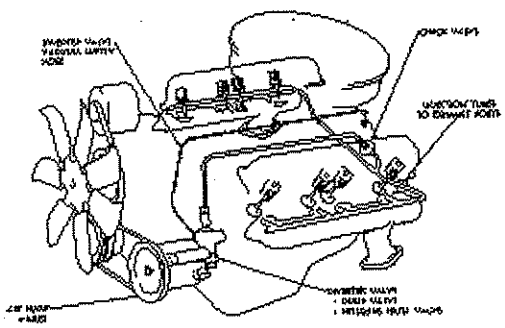

The system should be inspected for proper installation of the air pump, control and check valves and air tubes or manifolds. Air hoses and vacuum control system hoses should be inspected for condition and proper connections. The pump drive belt should also be inspected for proper installation.

Automobile Emissions Systems Reference Guide

Catalytic Converter (CAT)

Catalytic converters are used to convert carbon monoxide (CO), hydrocarbons (HC) and oxides of nitrogen (NOx) into water vapor (H 2O), carbon dioxide (CO 2) and nitrogen (N 2). The catalysts used to create these conversions are palladium, platinum and rhodium, depending on the type of converter.

Typical single bed monolith type catalytic converter

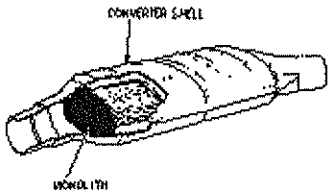

Typical single bed pellet type catalytic converter

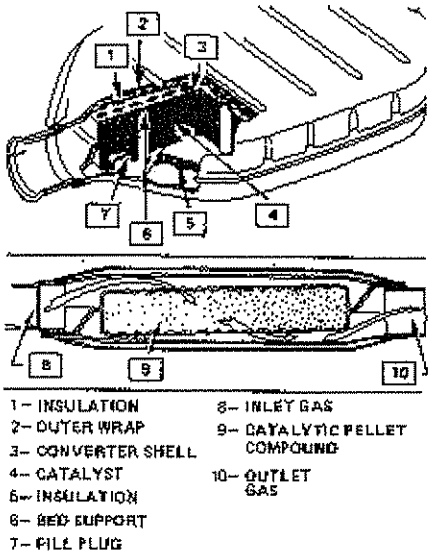

Automobile Emissions Systems Reference Guide

Typical dual bed monolith type catalytic converter

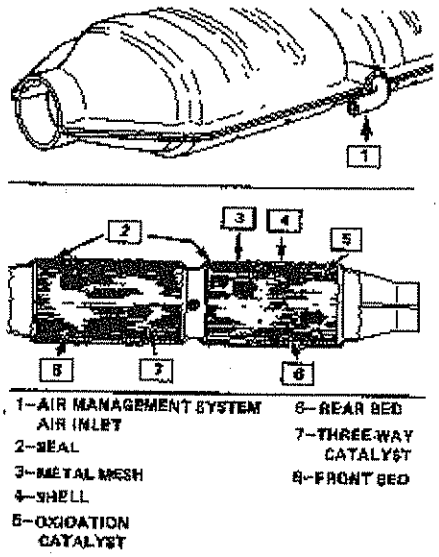

Typical dual bed pellet type catalytic converter

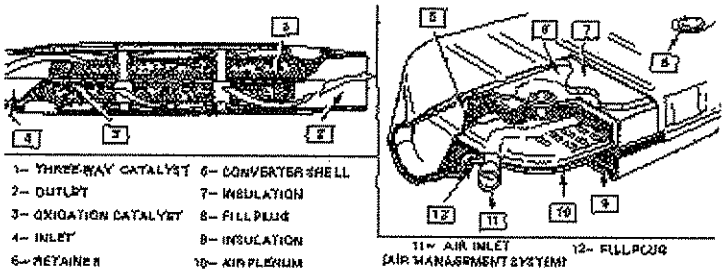

Typical dual bed pellet three-way catalytic converter

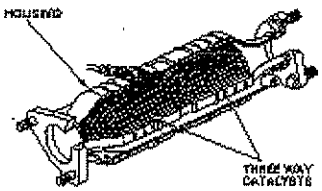

During engine operation, all of the exhaust gases flow through the converter where a chemical change takes place. This change causes the temperature inside the converter to be higher than the temperature of the exhaust gases when they leave the engine. Due to this increase in heat, the converter is insulated so that its outside temperature is about the same temperature as the muffler. However, due to its solid mass, the converter remains hot much longer than the muffler.

The converter body is made of stainless steel designed to last the life of the vehicle, and may be of the monolith or pellet type.

Although all vehicles with a catalytic converter must use unleaded fuel, small amounts of leaded fuel can be used in case of an emergency. To prevent adding leaded fuel, the fuel tank filler nozzle has a built-in restrictor.

The conventional Oxidizing Catalytic (OC) converter uses palladium and platinum, included as a fine coating on the substrate, to reduce harmful exhaust fumes.

The Three-Way Catalytic (TWC) converter contains palladium, platinum, and rhodium as oxidizing agents.

The dual bed (TWC+OC) type converter is two converters in one container. The front or upper half is a Three-Way Catalytic (TWC) converter, while the rear or lower half is a conventional Oxidizing Catalytic (OC) converter. The rear or lower half has a provision for air injection.

The Warm-Up (WU) converter is installed in the exhaust system ahead of the main converter and operates on the same principle as the main converter, but reacts more rapidly to incoming gases. It is especially effective in converting gases immediately after start up.

The catalytic converter may be installed at or near the exhaust manifold or in the exhaust system along the vehicle underbody. The converter body should be inspected for distortion and other types of damage. Excessive heat can bulge or distort the converter. Since excessive heat buildup is not the fault of the converter, the fuel or ignition system should be inspected whenever a converter is damaged by overheating. Also inspect for missing or improperly installed converter heat shields.

Computerized Engine Controls

The computerized engine control system is used to control fuel, ignition, emission control system and other components. The system monitors engine and vehicle operating conditions and adjusts the engine and vehicle control systems to provide maximum operating efficiency, resulting in reduced exhaust emissions.

Inspect components for proper installation and damage, and all components for proper electrical and vacuum connections.

Early Fuel Evaporation (EFE)

This system is used to provide a source of rapid heat for quick induction system warm-up during cold engine operation. Rapid heat is more desirable because it provides for better fuel evaporation and a more uniform mixture.

The electrically heated grid type is located underneath the primary bore of the carburetor. When coolant temperature is below a specified value the electrically heated grid will be activated when the ignition is turned on. When coolant temperature rises above the specified value, the electrically heated grid will be de-energized.

The vacuum operated type EFE heat control valve is mounted between the exhaust manifold and pipe. The valve directs a portion of the exhaust gases through the intake manifold during engine warm-up. A thermal vacuum switch or a solenoid is used to control the EFE valve operation. When engine coolant or oil temperature is at or below a specified temperature, the thermal vacuum switch will allow vacuum flow to the EFE control valve, diverting exhaust gases through the intake manifold. When coolant or oil temperature rises above the specified value, the thermal vacuum switch will close off vacuum to the EFE control valve, stopping exhaust gas flow through the intake manifold. On models that use a solenoid to control EFE operation, the EFE control valve activation and deactivation is controlled by the PCM.

The orifice type EFE system consists of an orifice restriction in one end of the exhaust crossover pipe. This orifice will increase the flow of exhaust gases through the exhaust crossover located under the intake manifold. The system is in effect whenever the engine is running.

ECS Maintenance Reminder Lamp or Flag

An ECS maintenance reminder lamp or flag is used to indicate that a specific mileage or period of time has elapsed and a required emission control service must be performed. After the required emission control service has been performed, the maintenance reminder lamp or flag should be reset.

If an emission maintenance reminder flag is present or if the emission maintenance reminder lamp is continually lit while the engine is operating, the vehicle should be suspected of needing a required emission control maintenance service.

Emission Calibration Label

Ford Motor Co. models may be equipped with an emission calibration label, located in the engine compartment, on the engine valve cover or on the left-hand or right-hand door or door pillar, depending on model of vehicle. This label will list the engine year, calibration code and revision level. This number is used to determine calibration adjustments, specifications and components that are specific to a particular engine.

Ford Motor Co. emission control calibration label information. 1975–88

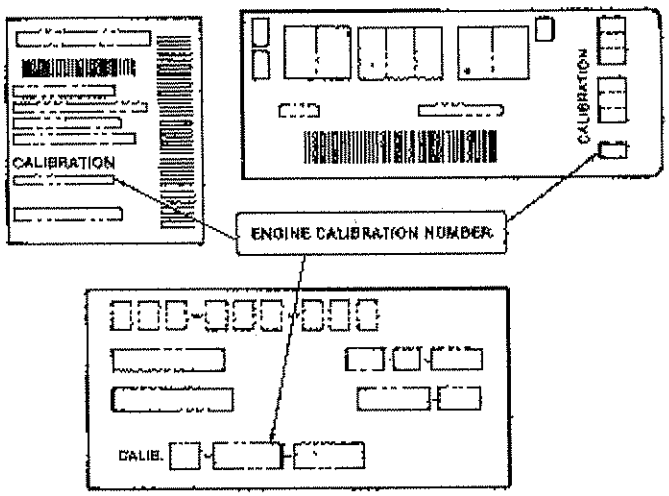

Ford Motor Co. emission control calibration label information. 1989–2000

Automobile Emissions Systems Reference Guide

Evaporative Emission (EVAP) System

The EVAP system is used to prevent fuel vapor emission into the atmosphere. On most models, the vapor generated in the fuel tank and carburetor bowl vent (if equipped) enters the storage canister where the charcoal absorbs and stores the vapor. During certain conditions, vacuum is applied to the storage canister and the fuel vapor is drawn into the intake manifold to be burned in the combustion chambers. During this process, the storage canister is purged by air drawn through the filter located on the canister. On some models the fuel vapors are routed to the positive crankcase ventilation system and stored in the crankcase until the engine is started. Most systems use a sealed pressure/vacuum relief fuel filler cap.

Typical Evaporative Emission System (EVAP)

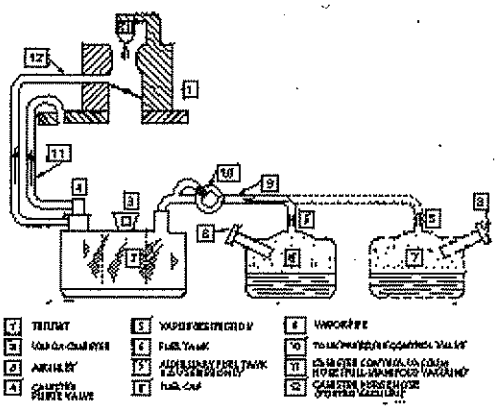

Typical Evaporative Emission System (EVAP) with On-Board Refueling Vapor Recovery (ORVR)

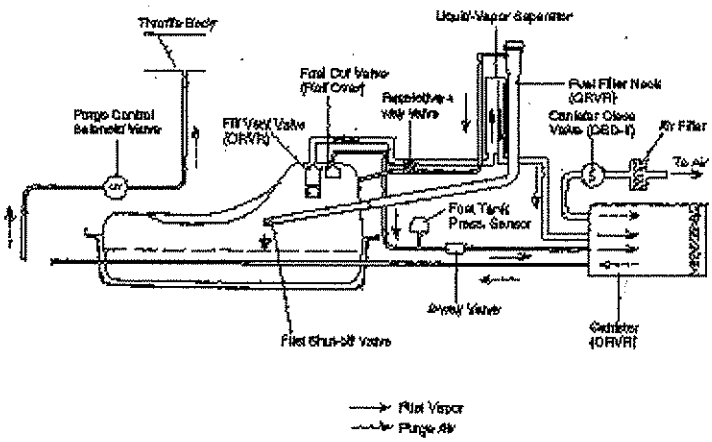

On some models equipped with OBD II, the PCM monitors EVAP system vacuum level through fuel tank pressure sensor input. The EVAP purge valve and canister vent valve turn on at an

appropriate time, allowing engine vacuum to draw a small vacuum on the entire EVAP system. After the desired vacuum level has been reached, the purge valve turns off, sealing the system. Leaks are detected by monitoring for a vacuum level decrease over a given time period if all other variables remain constant. A small leak should set DTC P0442. Large leaks should set DTC P0455.

On some models a leak detection pump also monitors EVAP system leaks. This device consists of a pump and switch, solenoid, canister vent valve and check valves. While in its ''pump'' mode, it cycles at a fixed rate in order to shorten overall test time. In its ''test'' mode its solenoid is energized with a fixed duration pulse. The pump spring is set so the system will achieve an equalized pressure. If the pump does not find any leaks, it will turn off and run the purge monitor. If any leaks are discovered, the test terminates at the end of the test mode.

The system should be inspected to ensure all canister(s), control solenoids and valves, liquid/vapor separator, fuel tank pressure sensor and roll over valve are properly installed. Inspect all electrical wiring and vacuum and vent lines for disconnections, wear, damage or restrictions. The fuel tank(s) should also be inspected for proper filler cap installation. On some later models with OBD II, an improperly installed fuel filler cap may cause the Malfunction Indicator Lamp (MIL) to illuminate and a DTC to be stored in the control module memory.

Automobile Emissions Systems Reference Guide

Exhaust Gas Recirculation (EGR) System

The Exhaust Gas Recirculation (EGR) system is designed to reintroduce exhaust gases into the combustion cycle, lowering combustion temperatures and reducing the formation of Nitrogen Oxides (NOx). Some models also use a sub-EGR system, which is operated mechanically by linkage.

Typical exhaust gas recirculation valve

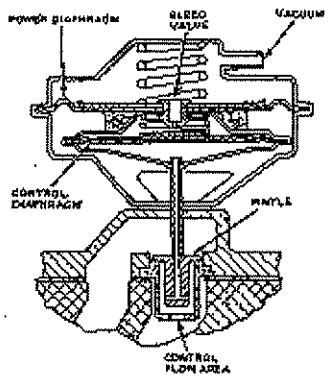

Typical dual exhaust gas recirculation valve

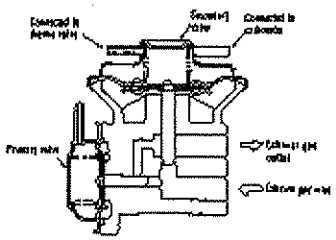

Typical integrated electronic exhaust gas recirculation valve

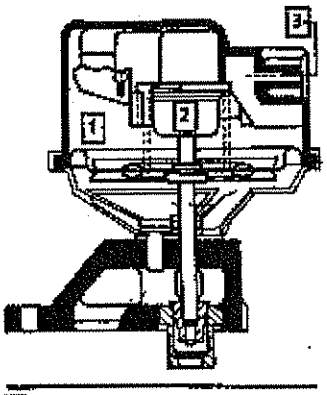

1 Diaphragm
2 Pintle Position Sensor
3 Vacuum Connection

Typical digital exhaust gas recirculation valve

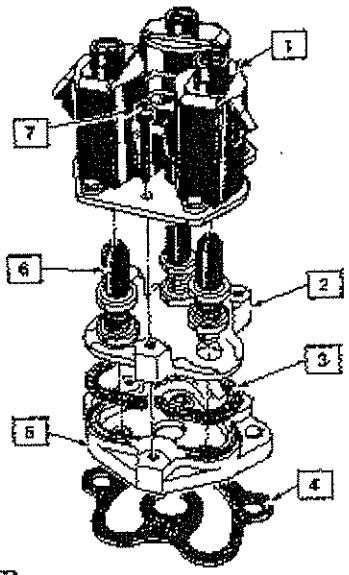

1 SOLENOID & MOUNTING PLATE ASSEMBLY
2 EGR BASE PLATE
3 EGR BASE GASKET
4 INSULATOR GASKET
5 EGR BASE
6 ARMATURE ASSEMBLY
7 SCREW ASSEMBLY

Automobile Emissions Systems Reference Guide

Typical linear exhaust gas recirculation valve

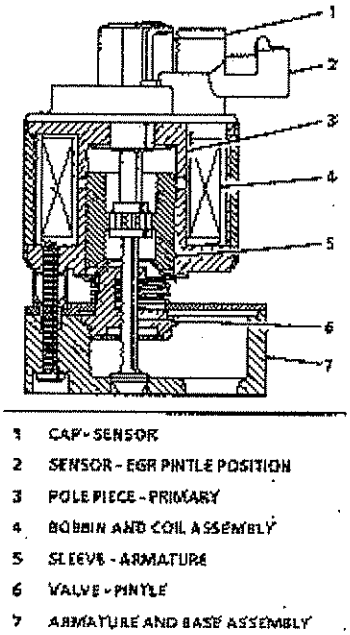

Typical floor jet exhaust gas recirculation

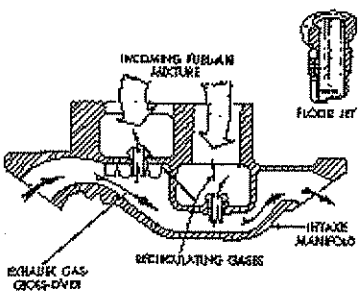

Typical sub-exhaust gas recirculation valve

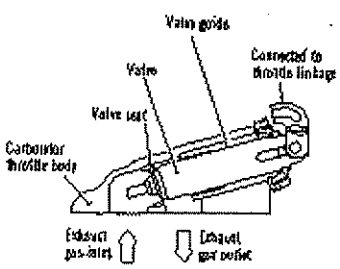

Inspect system for proper installation of EGR valve, control switches and sensors. Inspect for proper connection of vacuum hoses, electrical connectors and mechanical linkage, and all vacuum hoses for obstructions.

Fillpipe Restrictor (FR)

The fillpipe restrictor is used to prevent leaded fuel from being added to the fuel tank. The gasoline pump for unleaded fuel has a smaller nozzle than the leaded style. The fillpipe restrictor will only allow the unleaded type nozzle to be inserted into the fuel tank.

Fillpipe restrictor

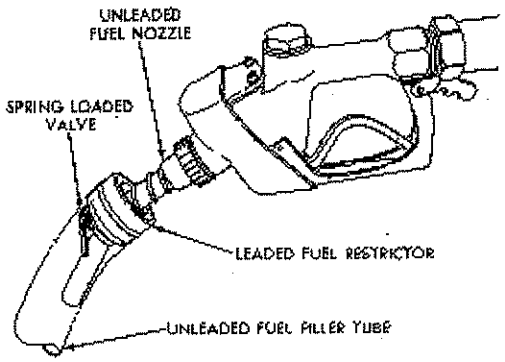

Remove the fuel filler cap and inspect the fillpipe restrictor for tampering. On models with more than one fuel tank, inspect all filler tubes.

Malfunction Indicator Lamp

The Malfunction Indicator (MIL), Check Engine, Service Engine Soon or similar lamps are used to indicate that a monitored fuel, ignition or emission related system is malfunctioning. On most vehicles, the lamp will illuminate for a few seconds after the vehicle is first started as a bulb check, the lamp should then turn off. If the lamp remains illuminated or flashes after the bulb check has been completed, a malfunction may be present in one of the monitored systems. Any vehicle which lights its indicator lamp while the engine is operating should be suspected of having a malfunctioning monitored system.

Oxygen Sensor (O2S)

The oxygen sensor is installed in the exhaust system and monitors the oxygen content of the exhaust gases. A voltage signal from the sensor informs the powertrain control module (PCM) as to the exhaust gas oxygen content (lean or rich condition). The PCM will interpret the voltage signal and compensate for the indicated condition.

The oxygen sensor should be inspected for proper installation and electrical connection. It should be noted that some vehicles are equipped with more than one oxygen sensor.

Automobile Emissions Systems Reference Guide

Positive Crankcase Ventilation (PCV) System

This system prevents crankcase vapors from entering the atmosphere by scavenging the blow-by gases in the crankcase and routing them into the intake manifold where they are burned along with the normal air/fuel mixture. In addition to controlling the emission of crankcase vapors into the atmosphere, this system continuously ventilates the crankcase with fresh air which aids in the prevention of sludge formation.

Typical Positive Crankcase Ventilation (PCV) system

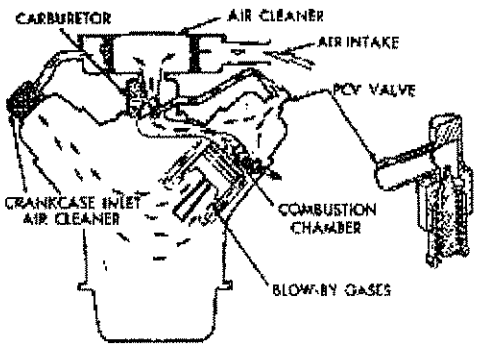

Manifold vacuum controls the airflow through the PCV system. When vacuum is relatively high, such as at idle or cruising speed, fresh air is drawn through the air inlet filter into the crankcase. After circulating through the crankcase, the vapor laden air is drawn through the PCV system and into the intake manifold. The vapor mixes with the air/fuel mixture and is burned in the combustion chambers. The PCV valve is calibrated to control airflow at a rate acceptable to the intake system. If crankcase vapor pressure (blow-by) exceeds the flow capacity of the PCV valve, airflow in the system reverses. Crankcase vapor is then drawn through the air cleaner element and carburetor and burned along with the air fuel mixture.

The PCV valve should be inspected for proper operation, and system hoses for condition and proper installation.

Automobile Emissions Systems Reference Guide

Pulsed Secondary Air Injection (PAIR) System

The PAIR system does not used an air pump. Pulsations in the exhaust system or the reciprocating motion of an engine piston are used by the PAIR valve to draw air into the exhaust. The system usually consists of a PAIR valve, check valve(s) and air tubing or hoses, to deliver the air to the exhaust ports or exhaust system.

Typical pulse (exhaust pulse) type air injection system

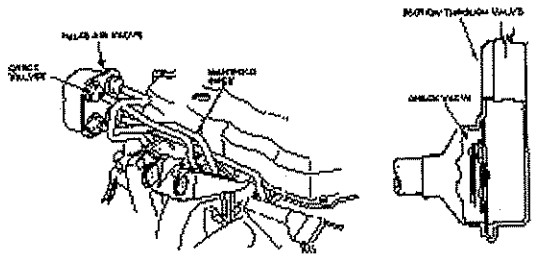

Typical pulse (piston reciprocation) type air injection system

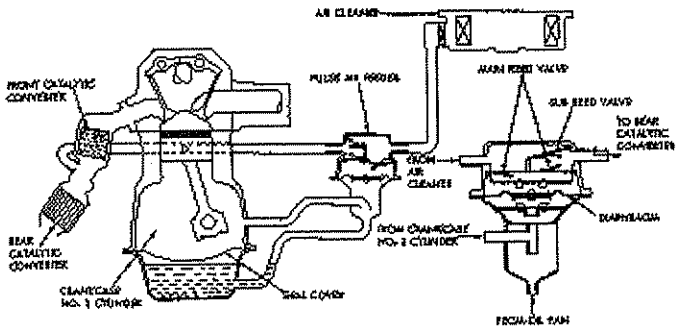

Ensure all components are properly installed. Inspect air and vacuum hoses for condition and proper routing.

Spark Control (SPK)

Due the various engine operating conditions, a spark control system is used to control the moment at which the air/fuel mixture in the combustion chamber is ignited, thus greatly reducing exhaust emissions.

Inspect all components for damage, tampering and proper installation, then all vacuum hoses and electrical connectors for proper connection and routing.

The thermal reactor is used to accelerate the oxidation of exhaust gases. This device is installed in the exhaust system. Secondary air is injected into the thermal reactor to mix with the exhaust gases, which are burned again in the thermal reactor to reduce the quantity of carbon monoxide (CO) and hydrocarbon (HC) in the exhaust.

Thermal Reactor

The thermal reactor is used to accelerate the oxidation of exhaust gases. This device is installed in the exhaust system. Secondary air is injected into the thermal reactor to mix with the exhaust gases, which are burned again in the thermal reactor to reduce the quantity of carbon monoxide (CO) and hydrocarbon (HC) in the exhaust.

Typical thermal reactor

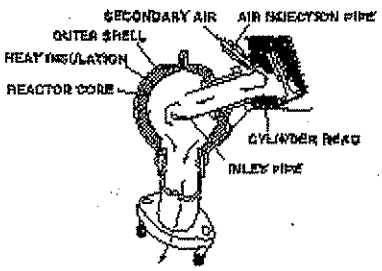

The thermal reactor should be inspected for proper installation. Also look for heat-related and other types of damage.

Selective Catalytic Reduction

Selective catalytic reduction (**SCR**) is a means of converting nitrogen oxides, also referred to as NO_x with the aid of a catalyst into diatomic nitrogen, N_2, and water, H_2O. A gaseous reductant, typically anhydrous ammonia, aqueous ammonia or urea, is added to a stream of flue or exhaust gas and is absorbed onto a catalyst. Carbon dioxide, Nitrogen, and water (CO_2, N_2, and H_2O) are reaction products when urea is used as the reductant.

Diesel Particulate Filtration

A Diesel Particulate Filters (**DPF**) is a device designed to remove diesel particulate matter or soot from the exhaust gas of a diesel engine. Wall-flow diesel particulate filters usually remove 85% or more of the soot, and can at times (heavily loaded condition) attain soot removal efficiencies of close to 100%. A diesel-powered vehicle equipped with functioning filter will emit no visible smoke from its exhaust pipe.

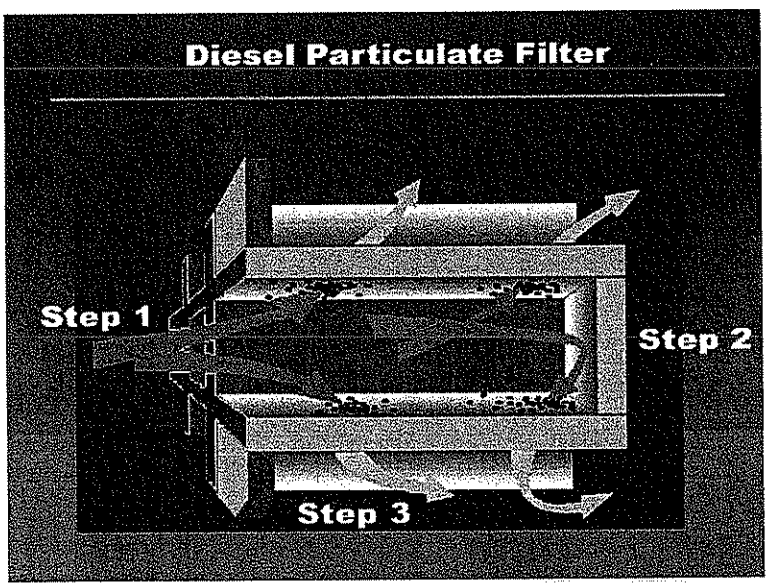

In addition to collecting the particulate, a method must exist to clean the filter. Some filters are single-use (disposable), while others are designed to burn off the accumulated particulate, either through the use of a catalyst (passive), or through an active technology, such as a fuel burner which heats the filter to soot combustion temperatures, through engine modifications (the engine is set to run a certain specific way when the filter load reaches a pre-determined level, either to heat the exhaust gases, or to produce high amounts of NO_2, which will oxidize the particulates at relatively low temperatures), or through other methods. This is known as "filter regeneration". Sulfur in the fuel interferes with many "regeneration" strategies, so almost all jurisdictions that are interested in the reduction of particulate emissions, are also passing regulations governing fuel sulfur levels.

Regeneration is the process of removing the accumulated soot from the filter. This is done either passively (by adding a catalyst to the filter) or actively. On-board active filter management can use a variety of strategies:

1. Engine management to increase exhaust temperature
2. Use of a fuel borne catalyst to reduce soot burn-out temperature
3. A fuel burner to increase the exhaust temperature
4. A catalytic oxidizer to increase the exhaust temperature, with after injection (HC-Doser)
5. Resistive heating coils to increase the exhaust temperature
6. Microwave energy to increase the particulate temperature

All on-board active systems use extra fuel, whether through burning to heat the DPF, or providing extra power to the DPF's electrical system, although the use of a fuel borne catalyst reduces the energy required very significantly. Typically a computer monitors one or more sensors that measure back pressure and/or temperature, and based on pre-programmed set points the computer makes decisions on when to activate the regeneration cycle. The additional fuel can be supplied by a metering pump. Running the cycle too often while keeping the back pressure in the exhaust system low will use extra fuel. Not running the regeneration cycle soon enough increases the risk of engine damage and/or uncontrolled regeneration (from an excess of accumulated soot) and possible DPF failure. Quality regeneration software is a necessity for longevity of the active DPF system.

Diesel particulate matter combusts when temperatures above 600 degrees Celsius are attained. This temperature can be reduced to somewhere in the range of 350 to 450 degrees Celsius by use of a fuel borne catalyst. The actual temperature of soot burn-out will depend on the chemistry employed. The start of combustion causes a further increase in temperature. In some cases, in the absence of a fuel borne catalyst, the combustion of the particulate matter can raise temperatures above the structural integrity threshold of the filter material, which can cause catastrophic failure of the substrate. Various strategies have been developed to limit this possibility. Note that unlike a spark-ignited engine, which typically has less than 0.5% oxygen in the exhaust gas stream before the emission control device(s), many diesel engines run above 15% oxygen pre-filter. While the amount of available oxygen makes fast regeneration of a filter possible, it also contributes to runaway regeneration problems.

Some applications use off-board regeneration. Off-board regeneration requires operator intervention (i.e. the machine is either plugged into a wall/floor mounted regeneration station, or the filter is removed from the machine and placed in the regeneration station). Off-board regeneration is not usable for on-road vehicles, except in situations where the vehicles are parked in a central depot when not in use. Many forklifts or inner-city transport vehicles may best suited for off-board regeneration. Such vehicles are seldom operated under conditions that are conductive to effective completion of the temperamental regeneration process.

Automobile Emissions Systems Reference Guide

Vehicle Emission Control Information Label

From model year 1970 on, passenger cars and light duty trucks are equipped with a vehicle emission control information label, affixed to the engine or the engine compartment. The information on this label includes, label code, model year, certification standards (Federal, California, Canada), engine family, engine size, engine tune up adjustment and specifications, applicable emission control components or systems, and, in some cases, the emission control system vacuum hose routing.

Vehicle emission control information label information. General Motors Corp. illustrated, others similar

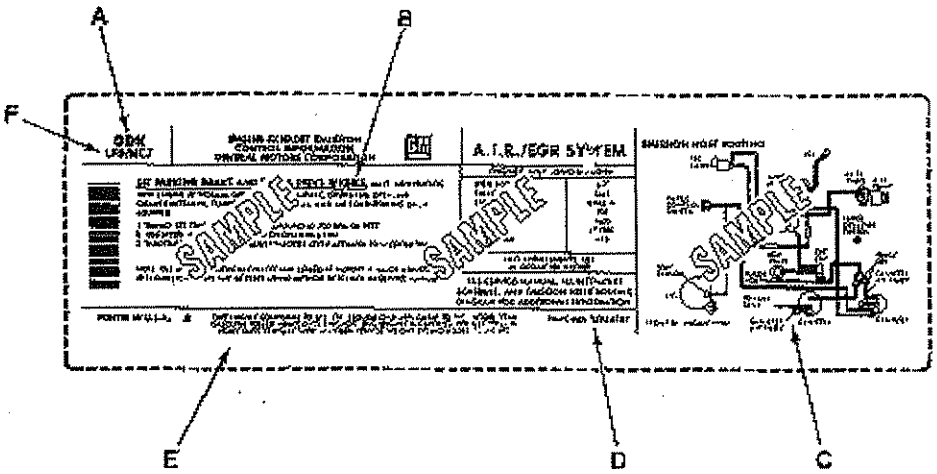

A. Label Code
B. Adjustment Procedure
C. Emission Component and Vacuum Hose Schematic
D. Label Part Number
E. Certification
F. Engine Size

Automobile Emissions Systems Reference Guide

Vehicle emission control information label information. Ford Motor Co. illustrated, others similar

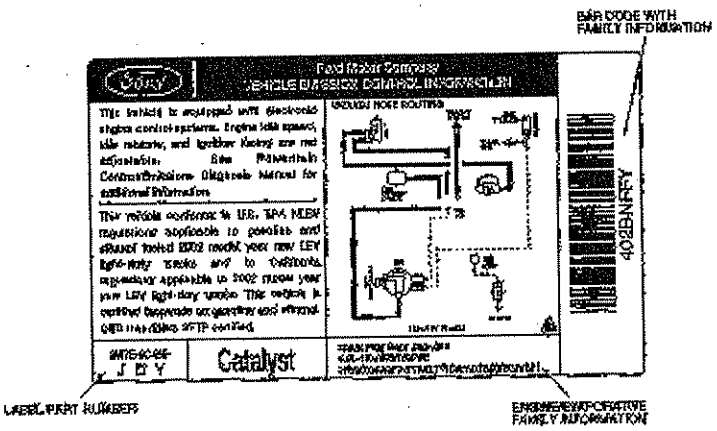

Canadian vehicle emission control information label information. Ford Motor Co. illustrated, others similar

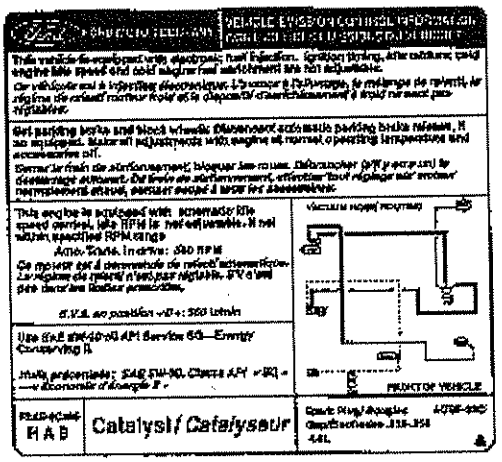

When installing a replacement emission control information labels on a vehicle which has a defaced, damaged or missing label, the label intended for that particular vehicle must be installed. Installation of label other than the one which is intended for the vehicle is in violation of state and federal laws, which may result in severe fines and penalties being imposed. It should also be noted that California law states that no person other than the manufacturer, or person authorized by the manufacturer, shall install a vehicle emission control label on any motor vehicle. Persons found in violation of the California law are subject to a fine and/or imprisonment.

Some manufacturers will affix a separate emission vacuum hoses routing label to the engine compartment. If a modification to the vehicle emission control system has been authorized by the

vehicle manufacturer, an Emission Control Modification Label should be affixed to the engine compartment noting this change.

California BAR (Bureau of Automotive Repair) and other state emission control inspection and maintenance laws may require an additional certification label to be affixed to the vehicle. These labels may be required on kit vehicles, gray market vehicles or vehicles in which an approved modification or component change may have been performed.

Visual Inspection Procedure

Although the focus of Ohio Environmental Protection Agency automotive anti-tampering inspections is to identify and document instances of automobile emissions tampering, it will also be helpful identify cases of poor maintenance, and faulty or worn emissions components. Should deficiencies of a non-tampering nature be found, the owner of the vehicle should be notified.

To ensure proper operation of all emission control system components it is necessary to perform a visual inspection. Refer to the Vehicle Emission Control Information Label and the Emission Control Application Charts in your current Motor Emission Control Systems Application Book for emission control component installation.

During this inspection, vacuum hoses should be inspected for condition and proper connections. All hoses should be free of pinches, cuts, cracks and disconnections. An inspection mirror may be required in areas where hoses are difficult to view. **On 1970 and later models**, emission control vacuum hose routing should be confirmed by referring to the vacuum hose routing on the Vehicle Emission Control Information or Vacuum Hose Routing Label, which should be affixed in the vehicle's engine compartment. **On earlier models and in cases where the Vacuum Emission Control Information Label is missing or unreadable and a replacement label is unavailable**, refer to maintenance and repair manuals for the applicable model.

If a vacuum hose routing modification has been authorized by the vehicle manufacturer, an Emission Control Modification Label should be affixed to the engine compartment noting this change. Any other modifications to the vacuum hose routing should be considered suspect.

Engine compartment wiring harnesses should be inspected for proper routing and loose or disconnected electrical connectors. Wiring should also be inspected for burned or chafed insulation and to ensure it is not pinched or in contact with sharp edges or exhaust manifolds. Inspect ignition wiring for heat damage and deterioration. Also note condition of distributor cap.

Inspect for disconnected choke assemblies and other carburetor components. Also inspect for unauthorized modifications to the fuel system. On models with AIR pump, inspect for missing, improperly adjusted or worn pump drive belt. On models with EGR, ensure all components are properly connected. While viewing under hood area with engine operating, inspect for engine misfire, unstable idle speed and abnormal noises. Also note any fuel, coolant, engine oil, vacuum, exhaust or compression leaks, as these may affect engine or emission control system operation.

Inspect exhaust system for deterioration, damage and exhaust leaks. On models which require a catalytic converter, ensure the converter and fuel tank filler neck restrictor are in place. Also inspect for unauthorized modifications.

When in passenger compartment of vehicle, inspect instrument panel for any Check Engine, Power Loss or Emission Reminder Indicator lamp lighting, which could indicate a malfunctioning or inoperative emission control or related system.

Automobile Emissions Systems Reference Guide

Abbreviations & Acronyms

AAC: Auxiliary Air Control

AAT: Ambient Air Temperature

AAV: Anti After-burn Valve

ABS: Anti-lock Brake System

A/C: Air Conditioning

ACC: Accessory Position

ACL: Air Cleaner (Thermostatic Type)

ACM: Air Bag Control Module

ACR-4: Air Conditioning Refrigerant, Recovery, Recycling, Recharging

ACT: Air Charge Temperature

A/D: Analog to Digital

AECM: Air Bag Electronic Control Module

A/F: Air/Fuel Ratio

AFR: Air Filter Restriction

AIR: Secondary Air Injection

AIRB: Secondary Air Injection Bypass

AIRD: Secondary Air Injection Diverter

AIS: Secondary Air Injection

ALDL: Assembly Line Diagnostic Link

AM1: Thermactor Air Management 1 (TAB) AM2: Thermactor Air Management 2 (TAB or TAD)

AP: Accelerator Pedal

API: American Petroleum Institute

APP: Accelerator Pedal Position

APS: Accelerator Position Sensor

ARS: Automatic Restraint System

ASD: Automatic Shutdown

ASDM: Air Bag System Diagnostic Module

ASR: Automatic Slip Regulation

A/T: Automatic Transaxle or Transmission

ATC: Active Transfer Case

ATDC: After Top Dead Center

BAP: Barometric Atmosphere Pressure

BAR: Bureau of Auto Repair

BARO: Barometric Pressure

BBL: Barrel

BCM: Body Control Module

BID: Breakerless Inductive Discharge

BOB: Breakout Box

BOO: Brake On/Off

BP: Barometric Pressure

BPA: Bypass Air

BPT: Backpressure Transducer

Automobile Emissions Systems Reference Guide

BTDC: Before Top Dead Center

BVT: Backpressure Variable Transducer

B+: Battery Positive Voltage

C: Continuous Memory

CA: California

CAB: Controller Anti-lock Brake

CAC: Charge Air Cooler

CANP: Canister Purge

CARB: California Air Resources Board

CARB: Carburetor

CAT: Catalytic Converter

CBD: Closed Bowl Distributor

CCA: Center Control Assembly

CCC: Converter Clutch Control Solenoid

CCCI: Computer Controlled Coil Ignition

CCD: Chrysler Collision Detection

CCD: Computer Controlled Dwell

CCECS: Computer Controlled Emission Control System

CCO: Converter Clutch Overdrive Solenoid

CCOT: Cycling Clutch Orifice Tube

CCP: Carbon Canister Purge

CCRM: Constant Control Relay Module

CEC: Computerized Emission Control System

CES: Clutch Engage Switch

CFRM: Condenser Fan Relay Module

CID: Cylinder Identification

CID: Cubic Inch Displacement

CIS: Constant Injection System

CIS-E: Constant Injection System Electronic

CKP: Crankshaft Position Sensor

CLECS: Closed Loop Emission Control System

CLFCS: Closed Loop Fuel Control System

CMFI: Central Multi-Port Fuel Injection

CMP: Camshaft Position Sensor

CMTC: Compass/Mini-Trip Computer

CNG: Compressed Natural Gas

CO: Carbon Monoxide

COP: Coil On Plug

CO2: Carbon Dioxide

CP: Canister Purge

CP: Crankshaft Position

CPP: Clutch Pedal Position

CPU: Central Processing Unit

CSF: Crankshaft Speed Fluctuation

Automobile Emissions Systems Reference Guide

CSFI: Central Sequential Fuel Injection

CTM: Central Timer Module

CTOX: Continuous Trap Oxidizer

CTP: Closed Throttle Position

CVVT: Continuous Variable Valve Timing

CYP: Cylinder Position

C3: Computer Command Control

C-4: Computer Controlled Catalytic Converter

DAB: Driver Air Bag

DCL: Data Communications Link

DDI: Direct Diesel Injection

DDS: Driveline Disengagement Switch

DEC: Diesel Engine Control

DERM: Diagnostic Energy Reserve Module

DFI: Digital Fuel Injection

DI: Distributor Ignition

DIC: Driver Information Center

DIS: Distributorless Ignition System

DIS: Direct Ignition System

DLC: Data Link Connector

DME: Digital Motor Electronics

DMIVA: Distributor Mounted Ignition Vacuum Advance

DOC: Diesel Oxygen Catalyst

DOHC: Dual Overhead Camshaft

DPF: Diesel Particulate Filter

DPFE: Differential Pressure Feedback EGR

DPI: Dual Plug Ignition

DRB: Diagnostic Readout Box

DRB II: Diagnostic Readout Box II

DRB III: Diagnostic Readout Box III

DRL: Daytime Running Lamps

DS-I: Dura Spark I Ignition System

DS-II: Dura Spark II Ignition System

DSAS: Deceleration Spark Advance System

DSS: Downshift Solenoid

DTC: Diagnostic Trouble Code

DTM: Diagnostic Test Mode

DVOM: Digital Volt Ohm Meter

EAIR: Electronic Secondary Air Injection

EAT: Electronically Controlled Automatic Transaxle or Transmission

EBCM: Electronic Brake Control Module

EBL: Electric Back Lite (Rear Window Defroster)

EBP: Exhaust Back Pressure

ECA: Electronic Control Assembly

Automobile Emissions Systems Reference Guide

ECCS: Electronic Concentrated Engine Control System

ECITS: Electronic Control Ignition Timing System

ECL: Engine coolant Level

ECM: Engine Control Module

ECT: Engine Coolant Temperature

ECTF: Cooling Fan Engine Coolant Temperature

ECU: Engine Control Unit

EDF: Electro Drive Fan

EDFI: Electronic Diesel Fuel Injection

EDI: Electronic Controlled Direct Ignition System

EDIS: Electronic Distributorless Ignition System

EDL: Engine Data Line

EEC-I: Electronic Engine Control I

EEC-II: Electronic Engine Control II

EEC-III: Electronic Engine Control III

EEC-IV: Electronic Engine Control IV

EEC-V: Electronic Engine Control V

EEGR: Electronic EGR Valve

EEPROM: Electronically Erasable Programmable Read Only Memory

EET: Electronic EGR Transducer

EFC: Electronic Feedback Carburetor

EFE: Early Fuel Evaporation

EFI: Electronic Fuel Injection

EGO: Exhaust Gas Oxygen Sensor

EGR: Exhaust Gas Recirculation

EGRC: EGR Control

EGR/C: Exhaust Gas Recirculation Cooling

EGRT: EGR Temperature

EGRV: EGR Vent

EI: Electronic Ignition

EIC: Electronic Instrument Cluster

EICU: Electronic Ignition Control Unit

EITC: Electronic Ignition Timing Control

ELB: Electronic Lean Burn System

ELC: Electronic Level Control

ELCD: Evaporative Loss Control Device

ELD: Electric Load Detector

EMR: Electronic Module Retard

EOP: Engine Oil Pressure

EOT: Engine Oil Temperature

EPA: Environmental Protection Agency

EPC: Electronic Pressure Control

EPR: Exhaust Back Pressure Regulator

Automobile Emissions Systems Reference Guide

EPROM: Erasable Programmable Read Only Memory

EPT: EGR Pressure Transducer

ESA: Electronic Spark Advance

ESC: Electronic Spark Control

ESS: Engine Speed Sensor

EST: Electronic Spark Timing

ETC: Electronic Temperature Control

ETC: Electronic Throttle Control

ETCS-i: Electronic Throttle Control System-intelligent

ETW: Equivalent Test Weight

EVAP: Evaporative Emission Control System

EVIC: Electronic Vehicle Information Center

EVO: Electronic Variable Orifice

EVP: EGR Valve Position

EVR: EGR Vacuum Regulator

EVSV: Electronic Vacuum Switching Valve

EWL: Engine Warning Lamp

EZL: Electronic Ignition System with Variable Characteristics

FBC: Feedback Carburetor

FDCS: Fuel Demand Command Signal

FED: Federal

FEEPROM: Flash Electrically Erasable Programmable Read Only Memory

FEPROM: Flash Electrically Programmable Read Only Memory

FF: Flexible Fuel

FFR: Fuel Filler Restrictor

FI: Fuel Injection

FMEM: Failure Mode Effects Management

FMI: Failure Mode Identifiers

FPM: Fuel Pump Monitor

FPCM: Fuel Injection Pump Control Module

FPRC: Fuel Pressure Regulator Control

FR: Fill pipe Restrictor

FSS: Flexible Service System

GFD: Generic Field Data

GFP: Gaseous Fuel Prep

GPC: Glow Plug Control

GPL: Glow Plug Wait Lamp

GPM: Gallons Per Minute

gpm: Grams Per Million

GPR: Glow Plug Relay

GVW: Gross Vehicle Weight

GVWR: Gross Vehicle Weight Rating

HC: Hydrocarbons

HCU: Hydraulic Control Unit

HD: Heavy Duty

HDC: Heavy Duty Emission Cycle

HE: Hall Effect

HEDF: High Electro Drive Fan

HEGO: Heated Exhaust Gas Oxygen Sensor

HEI: High Energy Ignition System

HEUI: Hydraulically Actuated Electronically Controlled Unit Injectors

HFAN: High Speed Cooling Fan

HFC: High Fan Control

HFM: Hot Film Air Mass Sensor

HO: High Output

HO2S: Heated Oxygen Sensor

HSC: High Swirl Combustion

HSIA: High Speed Inlet Air Control

HVAC: Heater Vent Air Conditioning

HVS: High Voltage Switch Ignition System

IAC: Idle Air Control

IACV-AAC: Idle Air Control Valve-Auxiliary Air Control Valve

IAT: Intake Air Temperature

IC: Ignition Control

ICM: Ignition Control Module

ICP: Injector Control Pressure

ICS: Ignition Control System

ICTO: Ignition Coolant Temperature Override

IDI: Indirect Diesel Injection

IDI: Indirect Fuel Injection

IDM: Ignition Diagnostic Monitor

IDM: Injector Driver Module

ILEV: Inherently Low Emissions Vehicle

IMRC: Intake Manifold Runner Control

IMT: Intake Manifold Temperature

IOD: Ignition Current Off Draw

IPR: Injection Control Pressure Regulator

ISC: Idle Speed Control

ITS: Idle Tracking Switch

IVS: Idle Validation Switch

JTEC: Jeep Truck Power Train Control Module System

KAM: Keep Alive Memory

KOEO: Key On Engine Off

KOER: Key On Engine Running

KS: Knock Sensor

LCD: Liquid Crystal Display

LDP: Leak Detection Pump

LED: Light Emitting Diode

LEV: Low Emissions Vehicle

LFAN: Low Speed Cooling Fan

LH: Left-hand

LPG: Liquid Propane Gas

LPT: Light Pressure Turbo

LUS: Lock-Up Solenoid

LVW: Loaded Vehicle Weight

M/CCC: Modulated Converter Clutch Control

MAF: Mass Air Flow

MAP: Manifold Absolute Pressure

MAT: Manifold Air Temperature

MC-VAF: Measuring Core Volume Air Flow

MCC: Manifold Catalytic Converter

MCCA: Message Center Control Assembly

MCS: Mixture Control System

MCU: Microprocessor Control Unit

MDP: Manifold Differential Pressure

MEMCAL: Memory Calibration Unit

MFI: Multi-Port Fuel Injection

MIC: Mechanical Instrument Cluster

MID: Message Identifier

MIL: Malfunction Indicator Lamp

MLP: Manual Lever Position

MLUS: Modulator Lock-Up Solenoid

MPI: Multi-Port Injection

MST: Manifold Surface Temperature

M/T: Manual Transaxle or Transmission

MTA: Managed Thermactor Air

MUI: Mechanical Unit Injection

MUT II: Multi-Use Tool, Second Edition

NGS: New Generation Star Tester

NGV: Natural Gas Vehicle

NOx: Oxides of Nitrogen

NVRAM: Non Volatile Random Access Memory

O: Key On Engine Off

OBD: On-Board Diagnosis

OBD II: On-Board Diagnosis II

OC: Oxidation Catalytic Converter

OCC: Output Circuit Check

ODM: Output Driver Module

ODO: Odometer

OHC: Overhead Cam

ORVR: On Board Refueling Vapor Recovery

Automobile Emissions Systems Reference Guide

OSAC: Orifice Spark Advance Control

OSC: Output State Control

OSS: Output Shaft

OSS: Output Speed Sensor

OTIS: Overhead Travel Information System

OWL: Oil/Water Warning Lamp

O2S: Oxygen Sensor

PAB: Passenger Air Bag

PAD: Passenger Air Bag Disable

PAG: Polyalkaline Glycol

PAIR: Pulsed Secondary Air Injection

PCI: Programmable Communication Interface

PCM: Power-Train Control Module

PCV: Positive Crankcase Ventilation

PDC: Power Distribution Center

PFE: Pressure Feedback EGR

PG: Pulse Generator

PGM-CARB: Programmed Carburetor

PGM-FI: Programmed Fuel Injection Control System

PGM-IG: Programmed Ignition

PID: Parameter Identifier

PIP: Profile Ignition Pickup

PNP: Park/Neutral Position

ppm: Parts Per Million

PRC: Pressure Regulator Control

PROM: Programmable Read Only Memory

PSI: Pounds per Square Inch

PSP: Power Steering Pressure

PSPS: Power Steering Pressure Switch

PTEC: Power-Train Electronic Controller Management System

PTO: Power Take Off

PTOX: Periodic Trap Oxidizer

PWM: Pulse Width Modulated

R: Key On Engine Running

RABS: Rear Anti-lock Braking System

RAM: Random Access Memory

RAP: Retained Accessory Power

RDS: Radio Data System

REDOX: Reduction Oxidation Catalytic Converter

REGT: Recirculated Exhaust Gas Temperature

RFI: Radio Frequency Interference

RH: Right-hand

RKE: Remote Keyless Entry

ROM: Read Only Memory

RON: Research Octane Number

RPM: Revolutions Per Minute

RPS: Revolutions Per Second

SAW: Spark Angle Word

SBEC: Single Board Engine Control

SC: Supercharger

SCC: Spark Control Computer

SCCS: Speed Control Command Switches

SCR: Selective Catalytic Reduction

SCR-U Selective Catalytic Reduction (Urea)

SCS: Speed Controlled Spark

SFI: Sequential Multi-Port Fuel Injection

SFTP: Supplementary Federal Test Procedure

SHO: Super High Output

SID: Subsystem Identifier

SIL: Shift Indicator Lamp

SKIM: Smart Key Immobilizer Module

SMEC: Single Module Engine Control

SOHC: Single Overhead Camshaft

SO2: Sulfur Dioxide

SPCS: Spark Plug Switching Control System

SPI: Serial Peripheral Interface

SPK: Spark Control

SPOUT: Spark Output

SRI: Service Reminder Indicator

SRS: Supplemental Restraint System

SS: Shift Solenoid

SSI: Solid State Ignition

SST: Special Service Tool

STAR: Self-Test Automatic Readout

STC: Spark Timing Control

STI: Self-Test Input

STO: Self-Test Output

SULEV: Super Ultra Low Emissions Vehicle

SVO: Special Vehicle Operations

SVT: Special Vehicle Team

TAB: Thermactor Air Bypass Vacuum Solenoid Valve

TAC: Tachometer Output Signal

TAD: Thermactor Air Diverter Vacuum Solenoid Valve

TBI: Throttle Body Fuel Injection

TC: Turbocharger

TCC: Torque Converter Clutch

TCS: Transmission Controlled Spark

TDC: Top Dead Center

Automobile Emissions Systems Reference Guide

TFI-I: Thick Film I Ignition System

TFI-IV: Thick Film IV Ignition System

TFT: Transmission Fluid Temperature

TI Transistor Ignition System

TLEV: Transitional Low Emission Vehicle

TOT: Transmission Oil Temperature

TP: Throttle Position

TP: Throttle Positioner

TPI: Tuned Port Injection

TPOUT: Throttle Position Output

TPS: Throttle Position Sensor

TRS: Transmission regulated Spark

TSB: Technical Service Bulletin

TSS: Transmission Speed Sensor

TSS: Turbine Speed Sensor

TTS: Transaxle Temperature Switch

TV: Throttle Valve

TVP: Throttle Valve Potentiometer

TVV: Thermal Vacuum Valve

TWC: Three-Way Catalytic Converter

TWC+OC: Three-Way + Oxidation Catalytic Converter

UIC: Universal Integrated Circuit Ignition

ULEV: Ultra Low Emissions Vehicle

UVC: Under Valve Cover

VAF: Vane Air Flow

VAF: Volume Air Flow

VANOS: Double Variable Camshaft Control

VAT: Vane Air Temperature

VCM: Vehicle Control Module

VCRM: Variable Control Relay Module

VDV: Vacuum Delay Valve

VEPS: Vehicle Electronic Programming System

VFD: Vacuum Fluorescent Display

VIC: Vehicle Information Center

VICS: Variable Inertia Charging System

VIN: Vehicle Identification Number

VIT: Vehicle Interface Tool

VPM: Vehicle Personality Module

VP-20: Bosch VP-20 Diesel Engine Control System

VRE: Vehicle Retarder Enable

VREF: Reference Voltage

VRV: Vacuum Regulator Valve

VSS: Vehicle Speed Sensor

VTEC: Variable Valve Timing & Valve Lift Electronic Control

VTSS: Vehicle Theft Security System

Automobile Emissions Systems Reference Guide

VVTi: Variable Valve Timing With Intelligence

WAC: Wide Open Throttle A/C Cutoff

WOT: Wide Open Throttle

WOTPS: Wide Open Throttle Position Switch

WSS: Wheel Speed Sensor

WU-OC: Warm-Up Oxidation Catalytic Converter

WU-TWC: Warm-Up Three-Way Catalytic Converter

X: Equipped

—: Not Equipped

ZEV: Zero Emissions Vehicle

1 BBL: 1 Barrel Carburetor

2 BBL: 2 Barrel Carburetor

3 BBL:3 Barrel Carburetor

4 BBL: 4 Barrel Carburetor

2 VH: 2 Valve Head

4 VH: 4 Valve Head

ENGINE DISPLACEMENT CONVERSION CHART

Liters to CU. IN. Conversion Chart

Liters	CU. IN.	Liters	CU. IN.	Liters	CU. IN.
1.0	61	3.5	214	6.0	366
1.1	67	3.6	220	6.1	372
1.2	73	3.7	226	6.2	378
1.3	79	3.8	232	6.3	384
1.4	85	3.9	238	6.4	391
1.5	92	4.0	244	6.5	397
1.6	98	4.1	250	6.6	403
1.7	104	4.2	256	6.7	409
1.8	110	4.3	262	6.8	415
1.9	116	4.4	269	6.9	421
2.0	122	4.5	275	7.0	427
2.1	128	4.6	281	7.1	433
2.2	134	4.7	287	7.2	439
2.3	140	4.8	293	7.3	445
2.4	146	4.9	299	7.4	452
2.5	153	5.0	305	7.5	458
2.6	159	5.1	311	7.6	464
2.7	165	5.2	317	7.7	470
2.8	171	5.3	323	7.8	476
2.9	177	5.4	330	7.9	482
3.0	183	5.5	336	8.0	488
3.1	189	5.6	342	8.1	494
3.2	195	5.7	348	8.2	500
3.3	201	5.8	354	8.3	506
3.4	207	5.9	360	8.4	513

Popular American Engine Displacements

CU. IN.	Liters	CU. IN.	Liters
144	2.359727	413	6.767829
242	3.965653	421	6.898925
250	4.096749	426	6.98086
258	4.227845	427	6.997247
262	4.293393	428	7.013634
289	4.735842	429	7.030021
300	4.916099	440	7.210278
301	4.932486	545	8.930912
302	4.948873	454	7.439696
304	4.981647	460	7.538018
305	4.998034	472	7.734662
307	5.030808	500	8.193498
318	5.211064	505	8.275433
326	5.34216	501	8.209885
327	5.358547	572	9.373361
340	5.571578		
350	5.735448		
351	5.751835		
360	5.899318		
383	6.276219		
389	6.374541		
390	6.390928		
396	6.48925		
400	6.554798		
409	6.702281		

Bibliography

Alldata.com. (n.d.). Technicians Reference.

Cascade Automotive Resources (A Division of MOTOR Information Systems. (2006). Visual Inspection Procedures. In *Emission Control Systems Application (2006 Edition)* (pp. 6-1 Through 6-9). Troy, MI: Hearst Business Publishing, Inc.

Emission Control System Schematics. *Emission Control System Schematics.* Gordon-Darby, Inc., Louisville, Ky.

McLeod Consultants, LLC. (2007) Statewide Anti-Tampering Program. Euclid, OH.

McLeod Consultants, LLC (2010) Automotive Anti-Tampering Training Program. Euclid, OH

McLeod Consultants, LLC (2013) Automotive Anti-Tampering Training Program. Euclid, OH

Used with limited permission Cascade Automotive Resources, Alldata.com, Gordon-Darby, Inc. and McLeod Consultants, LLC