National Pollutant Discharge Elimination System (NPDES) Permit Program

# F A C T  S H E E T

Regarding an NPDES Permit to Discharge to Waters of the State of Ohio
for **NRG Midwest LP - Niles Generating Plant**

Public Notice No.: 14-05-093
Public Notice Date: May 30, 2014
Comment Period Ends: June 30, 2014

OEPA Permit No.: **3IB00007*ND**
Application No.: **OH0011533**

Name and Address of Applicant:

**NRG Midwest LP**
**1047 Belmont Avenue**
**Niles, Ohio 44446**

Name and Address of Facility Where Discharge Occurs:

**NRG Midwest Niles Generating**
**1047 Belmont Avenue**
**Niles, Ohio 44446**
**Trumbull County**

Receiving Water: **Mahoning River**

Subsequent Stream Network: **Beaver River to Ohio River**

## Introduction

Development of a Fact Sheet for NPDES permits is mandated by Title 40 of the Code of Federal Regulations, Section 124.8 and 124.56. This document fulfills the requirements established in those regulations by providing the information necessary to inform the public of actions proposed by the Ohio Environmental Protection Agency, as well as the methods by which the public can participate in the process of finalizing those actions.

This Fact Sheet is prepared in order to document the technical basis and risk management decisions that are considered in the determination of water quality based NPDES Permit effluent limitations. The technical basis for the Fact Sheet may consist of evaluations of promulgated effluent guidelines, existing effluent quality, instream biological, chemical and physical conditions, and the relative risk of alternative effluent limitations. This Fact Sheet details the discretionary decision-making process empowered to the Director by the Clean Water Act and Ohio Water Pollution Control Law (ORC 6111). Decisions to award variances to Water Quality Standards or promulgated effluent guidelines for economic or technological reasons will also be justified in the Fact Sheet where necessary.

Effluent limits based on available treatment technologies are required by Section 301(b) of the Clean Water Act. Many of these have already been established by U.S. EPA in the effluent guideline regulations (a.k.a. categorical regulations) for industry categories in 40 CFR Parts 405-499. Technology-based regulations for publicly-owned treatment works are listed in the Secondary Treatment Regulations (40 CFR Part 133). If regulations have not been established for a category of dischargers, the director may establish technology-based limits based on best professional judgment (BPJ).

Ohio EPA reviews the need for water-quality-based limits on a pollutant-by-pollutant basis. Wasteload allocations are used to develop these limits based on the pollutants that have been detected in the discharge, and the receiving water's assimilative capacity. The assimilative capacity depends on the flow in the water receiving the discharge, and the concentration of the pollutant upstream. The greater the upstream flow, and the lower the upstream concentration, the greater the assimilative capacity is. Assimilative capacity may represent dilution (as in allocations for metals), or it may also incorporate the break-down of pollutants in the receiving water (as in allocations for oxygen-demanding materials).

The need for water-quality-based limits is determined by comparing the wasteload allocation for a pollutant to a measure of the effluent quality. The measure of effluent quality is called PEQ - Projected Effluent Quality. This is a statistical measure of the average and maximum effluent values for a pollutant. As with any statistical method, the more data that exists for a given pollutant, the more likely that PEQ will match the actual observed data. If there is a small data set for a given pollutant, the highest measured value is multiplied by a statistical factor to obtain a PEQ; for example if only one sample exists, the factor is 6.2, for two samples - 3.8, for three samples - 3.0. The factors continue to decline as samples sizes increase. These factors are intended to account for effluent variability, but if the pollutant concentrations are fairly constant, these factors may make PEQ appear larger than it would be shown to be if more sample results existed.

**Summary of Permit Conditions**

The coal-fired units at the Niles Plant are currently shut down. Only combustion turbines are currently operable on-demand. This shut down affects several areas of the permit as described below.

For Outfall 001 (once-through cooling water and boiler blowdown) the existing thermal limits based on the facility's 1986 316(a) demonstration would remain in effect. If NRG chooses to continue these operations at the site, the company will need to submit data in the next application to re-justify these limits. The draft permit contains quarterly or semi-annual monitoring of parameters that may add pollutants to the discharge – ammonia and phosphorus (from boiler water additives), copper (from condenser tube corrosion), and bis(2-ethylhexyl)phthalate (from automatic sampler contamination). The permit requires Best Management Practices (BMPs) to control copper corrosion as an alternative to numeric limits. The bis-2EHP sampling would be done by manual composite to minimize the possibility of contamination.

For Outfall 002 (bottom ash, low volume wastewater and coal pile runoff) Ohio EPA is proposing to grant the mercury variance requested by the company. NRG has not been able to meet the 12 ng/l average limit at this outfall with end-of-pipe treatment. New WQ-based limits for cadmium and silver would apply at this outfall based on the new WLA. The draft permit would remove thallium monitoring requirements because thallium does not have the reasonable potential to contribute to excursions above water quality criteria.

The requirements for Outfall 008 contain limits for E.coli. rather than fecal coliform, due to Ohio EPA's new WQS for *E. coli*. bacteria. The fecal coliform limits for Outfall 606 remain because it is an internal outfall not subject to WQ-based effluent limits. Outfall 008 would have WQ-based pH limits, similar to other final outfalls at the plant.

Outfall 605 (boiler slag treatment) also appears to have discharged mercury concentrations greater than 12 ng/l. The permit requires NRG to submit a compliance plan or a variance justification before re-starting coal-fired operations at the facility. Monitoring requirements would be added at this outfall for iron,

barium, zinc, lead, copper, total dissolved solids and total residual chlorine due to Ohio rules for evaluating the reasonable potential to contribute to excursions above WQS.

The permit contains revised storm water control and management language (Parts IV, V and VI) based on conditions in Ohio EPA's general industrial storm water permit.

## Table of Contents


Page

Introduction ..... 1

Summary of Permit Conditions ..... 2

Table of Contents ..... 3

Procedures for Participation in the Formulation of Final Determinations ..... 5

Information Regarding Certain Water Quality Based Effluent Limits ..... 5

Location of Discharge/Receiving Water Use Classification ..... 7

Existing Facility Description ..... 7

Description of Existing Discharge ..... 8

Assessment of Impact on Receiving Waters ..... 9

Development of Water Quality Based Effluent Limits ..... 10

Reasonable Potential / Effluent Limits / Hazard Management Decisions ..... 20

Other Requirements ..... 26


## List of Figures


Figure 1. Location of NRG Niles ..... 28

Figure 2. Mahoning River Study Area. ..... 29


## List of Tables


Table 1. NRG Outfalls, Treatment Systems and Intake ..... 8

Table 2. Water Quality Criteria for Monte Carlo Model Parameters ..... 15

Table 3. Monte Carlo Model Inputs ..... 16

## Table of Contents (continued)

Table 4. Temperature Water Quality Standards and Wasteload Allocation ..... 18

Table 5. Temperature PEQ Values and Water Quality Standards ..... 21

Table 6. Effluent Characterization Using Application Form 2C Data – Outfall 001 ..... 33

Table 7. Effluent Characterization Using Application Form 2C Data – Outfall 002 ..... 34

Table 8. Effluent Characterization Using Application Form 2C Data – Outfalls 008/009 ..... 35

Table 9. Effluent Characterization Using Self-Monitoring Data ..... 36

Table 10. Summary of Effluent Acute Toxicity Test Results ..... 41

Table 11. Effluent Data and Projected Effluent Quality Values ..... 42

Table 12. Water Quality Criteria in the Study Area ..... 44

Table 13. Instream Conditions and Discharger Flow ..... 45

Table 14. Summary of Effluent Limits to Maintain Applicable Water Quality Criteria ..... 47

Table 15. Parameter Assessment for Outfall 001 ..... 50

Table 16. Parameter Assessment for Outfall 002 ..... 51

Table 17. Parameter Assessment for Outfall 008 ..... 52

Table 18. Parameter Assessment for Outfall 001 ..... 53

Table 19. Final Effluent Limits and Monitoring Requirements – Outfall 001/041 ..... 54

Table 20. Final Effluent Limits and Monitoring Requirements – Outfall 002 ..... 56

Table 21. Final Effluent Limits and Monitoring Requirements – Outfall 008 ..... 57

Table 22. Final Effluent Limits and Monitoring Requirements – Outfalls 009/605 ..... 58

Table 23. Final Effluent Limits and Monitoring Requirements – Outfalls 604/606 ..... 59

Attachment A River Segment Summary from Ohio Integrated Report ..... 60

Attachment B Ohio EPA Staff Review of Niles Plant Impingement/Entrainment Data ..... 64

**Procedures for Participation in the Formulation of Final Determinations**

The draft action shall be issued as a final action unless the Director revises the draft after consideration of the record of a public meeting or written comments, or upon disapproval by the Administrator of the U.S. Environmental Protection Agency.

Within thirty days of the date of the Public Notice, any person may request or petition for a public meeting for presentation of evidence, statements or opinions. The purpose of the public meeting is to obtain additional evidence. Statements concerning the issues raised by the party requesting the meeting are invited. Evidence may be presented by the applicant, the state, and other parties, and following presentation of such evidence other interested persons may present testimony of facts or statements of opinion.

Requests for public meetings shall be in writing and shall state the action of the Director objected to, the questions to be considered, and the reasons the action is contested. Such requests should be addressed to:

**Legal Records Section**
**Ohio Environmental Protection Agency**
**P.O. Box 1049**
**Columbus, Ohio 43216-1049**

Interested persons are invited to submit written comments upon the discharge permit. Comments should be submitted in person or by mail no later than 30 days after the date of this Public Notice. Deliver or mail all comments to:

**Ohio Environmental Protection Agency**
**Attention: Division of Surface Water**
**Permits and Compliance Section**
**P.O. Box 1049**
**Columbus, Ohio 43216-1049**

The OEPA permit number and Public Notice numbers should appear on each page of any submitted comments. All comments received no later than 30 days after the date of the Public Notice will be considered.

Citizens may conduct file reviews regarding specific companies or sites. Appointments are necessary to conduct file reviews, because requests to review files have increased dramatically in recent years. The first 250 pages copied are free. For requests to copy more than 250 pages, there is a five-cent charge for each page copied. Payment is required by check or money order, made payable to Treasurer State of Ohio.

For additional information about this fact sheet or the draft permit, contact Eric Nygaard at (614) 644-2024 (eric.nygaard@epa.ohio.gov) or John Schmidt at (330) 963-1175 (john.schmidt@epa.ohio.gov).

**Information Regarding Certain Water Quality Based Effluent Limits**

This draft permit may contain proposed water quality based effluent limitations for parameters that **are not** priority pollutants. (See the following link for a list of the priority pollutants:

http://epa.ohio.gov/portals/35/pretreatment/Pretreatment_Program_Priority_Pollutant_Detection_Limits.pdf . ) In accordance with Ohio Revised Code Section 6111.03(J)(3), the Director established these water quality based effluent limits after considering, to the extent consistent with the Federal Water Pollution Control Act, evidence relating to the technical feasibility and economic reasonableness of removing the polluting properties from those wastes and to evidence relating to conditions calculated to result from that action and their relation to benefits to the people of the state and to accomplishment of the purposes of this chapter. This determination was made based on data and information available at the time the permit was drafted, which included the contents of the timely submitted National Pollutant Discharge Elimination System (NPDES) permit renewal application, along with any and all pertinent information available to the Director.

This public notice allows the permittee to provide to the Director for consideration during this public comment period additional site-specific pertinent and factual information with respect to the technical feasibility and economic reasonableness for achieving compliance with the proposed final effluent limitations for these parameters. The permittee shall deliver or mail this information to:

**Ohio Environmental Protection Agency**
**Attention: Division of Surface Water**
**Permits Processing Unit**
**P.O. Box 1049**
**Columbus, Ohio 43216-1049**

Should the applicant need additional time to review, obtain or develop site-specific pertinent and factual information with respect to the technical feasibility and economic reasonableness of achieving compliance with these limitations, written notification for any additional time shall be sent to the above address no later than 30 days after the Public Notice Date on Page 1.

Should the applicant determine that compliance with the proposed water quality based effluent limitations for parameters other than the priority pollutants is technically and/or economically unattainable, the permittee may submit an application for a variance to the applicable water quality standard(s) used to develop the proposed effluent limitation in accordance with the terms and conditions set forth in Ohio Administrative Code (OAC) Rule 3745-33-07(D). The permittee shall submit this application to the above address no later than 30 days after the Public Notice Date.

Alternately, the applicant may propose the development of site-specific water quality standard(s) pursuant to OAC Rule 3745-1-35. The permittee shall submit written notification regarding their intent to develop site specific water quality standards for parameters that are not priority pollutants to the above address no later than 30 days after the Public Notice Date.

## Location of Discharge/Receiving Water Use Classification

NRG discharges to the Mahoning River at River Mile (RM) 30.09. The approximate location of the facility is shown in Figure 1.

This segment of the the Mahoning River is described by Ohio EPA River Code: 18-001, U.S. EPA River Reach #: 05030101-001, County: Trumbull, Ecoregion: Erie-Ontario Lake Plain. The Mahoning River is designated for the following uses under Ohio's Water Quality Standards (OAC 3745-1-25): Warmwater Habitat (WWH), Agricultural Water Supply (AWS), Industrial Water Supply (IWS), and Primary Contact Recreation (PCR- Class A).

Use designations define the goals and expectations of a waterbody. These goals are set for aquatic life protection, recreation use and water supply use, and are defined in the Ohio WQS (OAC 3745-1-07). The use designations for individual waterbodies are listed in rules -08 through -32 of the Ohio WQS. Once the goals are set, numeric water quality standards are developed to protect these uses. Different uses have different water quality criteria.

Use designations for aquatic life protection include habitats for coldwater fish and macroinvertebrates, warmwater aquatic life and waters with exceptional communities of warmwater organisms. These uses all meet the goals of the federal Clean Water Act. Ohio WQS also include aquatic life use designations for waterbodies which can not meet the Clean Water Act goals because of human-caused conditions that can not be remedied without causing fundamental changes to land use and widespread economic impact. The dredging and clearing of some small streams to support agricultural or urban drainage is the most common of these conditions. These streams are given Modified Warmwater or Limited Resource Water designations.

Recreation uses are defined by the depth of the waterbody and the potential for wading or swimming. Uses are defined for bathing waters, swimming/canoeing (Primary Contact) and wading only (Secondary Contact - generally waters too shallow for swimming or canoeing).

Water supply uses are defined by the actual or potential use of the waterbody. Public Water Supply designations apply near existing water intakes so that waters are safe to drink with standard treatment. Most other waters are designated for agricultural and industrial water supply.

## Facility Description

NRG produces electric power using coal-fired boilers and steam turbine generators. The plant has three generating units with a capacity of approximately 244 megawatts (MW). At present the coal-fired boilers are not operating – this represents most of the generating capacity (216 MW); the remaining capacity (28 MW) is a combustion turbine that is capable of generating power on short notice. The company has not yet made a final decision on operating or closing this plant; as a result Ohio EPA has drafted this permit renewal based on the potential for NRG to resume coal-fired operations at the Niles Plant.

The process operations performed at this facility are classified by the Standard Industrial Classification (SIC) codes 4911, "Electric Generating Facilities". Discharges resulting from process operations are therefore subject to Federal Effluent Guideline Limitations, contained in Chapter 40 of the Code of Federal Regulations, Part 423, "Steam Electric Power Generating" Industrial Category.

**Description of Existing Discharge**

The Niles Generating Plant has four discharge points to the Mahoning River (See Table 1 for flow and treatment information). Outfall 001 discharges once-through condenser cooling water from the generating units; it also contains boiler blowdown monitored at internal sampling station 604. Outfall 002 contains treated wastewater from the fly ash and bottom ash recycle systems and most of the low volume wastewater at the plant; this outfall also contains sanitary wastewater monitored at internal sampling station 606. Sanitary wastewater from the maintenance building is discharged via outfall 008. Outfall 009 contains boiler slag tank discharges (internal sampling station 605), as well as storm water and backwash from the intake screens.

Table 1. Description of Niles Plant Outfalls and Cooling Water Intake

| Outfall # | Type of Wastewater | Treatment System Used | Discharge Point | Avg. Discharge (in MGD)* |
|---|---|---|---|---|
| 001/041 | Once-through cooling water discharge, intake screen wash water, outfall 604 | - Disinfection | Mahoning River | 120 |
| 002 | Fly ash wastewater, coal pile runoff, bottom ash wastewater, low volume wastewater, steam condensate, non-contact cooling water | - Sedimentation<br>- Neutralization<br>- Chemical precipitation<br>- Reverse Osmosis | Mahoning River | 3.3 |
| 006, 007 | Storm water | - none | Mahoning River | Precipitation-dependent |
| 008 | Maintenance Building sanitary wastewater | - Sedimentation<br>- Activated sludge aeration<br>- Disinfection<br>- Dechlorination | Mahoning River | 0.001 |
| 009 | Combined slag tank overflow (Outfall 605), storm water, intake screen backwash | - none | Mahoning River | 2 |

| Outfall # | Type of Wastewater | Treatment System Used | Discharge Point | Avg. Discharge (in MGD)* |
|---|---|---|---|---|
| 604 | Boiler blowdown | - none | Outfall 001 | 0.002 |
| 605 | Slag tank overflow, storm water from roof drains and precipitator drain area | - none | Outfall 009 | 1.65 |
| 606 | Main plant sanitary wastewater | - Sedimentation<br>- Activated sludge aeration<br>- Chlorine disinfection<br>- Dechlorination | Outfall 002 | 0.0025 |
| 801 | Plant intake | - none | -- | -- |

*data is from facility Discharge Monitoring Reports, January 2006-July 2011.

Consistent with 40 CFR 122.45(h), the current permit includes monitoring and limits at internal stations 602, 603 and 604. Effluent guideline limits are applied at this outfall to ensure that these treatment standards are met prior to combining with other waste streams. If monitoring was not done at this location, it would not be possible to verify compliance with these standards due to dilution. Federal rules at 40 CFR 125.3(f) prohibit attaining these standards by dilution.

Tables 6-8 present chemical specific data compiled from the NPDES renewal application.

Table 9 presents a summary of unaltered Discharge Monitoring Report (DMR) data for NRG outfalls. Data are presented for the period January 2006 – December 2011, and current permit limits are provided for comparison.

Table 11 summarizes the chemical specific data for NRG's outfalls by presenting the average and maximum Projected Effluent Quality (PEQ) values.

Table 10 summarizes the results of acute whole effluent toxicity tests of the final effluent.

**Assessment of Impact on Receiving Waters**

The last three issues of Ohio's Integrated Water Quality Report have listed the lower Mahoning River as an impaired water. The WWH aquatic life use for the Mahoning River mainstem was listed as impaired based on data in the 2008 Integrated Report (several small surveys conducted between 1997 and 2006). For the 2010 and 2012 reports, the aquatic life status from the 2008 report were continued. Mainstem coverage was somewhat limited in that only 16 of 37 mainstem miles were considered assessed based on

these small surveys. Aquatic life use status of the remaining 21 miles remains unknown. Identified causes and sources based on the intensive survey conducted in 1994 were carried over to this Integrated Report.

A detailed description of the causes and sources of impairment are shown in Appendix A of this fact sheet. Among the causes of impairment, NRG Niles Plant is known to discharge chlorine, metals and thermal load. Achieving the wasteload allocations for chlorine and metal parameters (described in the following sections of the fact sheet) will ensure that WQS for these parameters are met. The current thermal load limits from the existing 316(a) demonstration and permit conditions are likely to be protective of WQS; however, the permit contains a requirement that NRG update the 316(a) demonstration studies to confirm that thermal loads from this plant protect warmwater biological communities in the Mahoning River.

**Development of Water-Quality-Based Effluent Limits**

Determining appropriate effluent concentrations is a multiple step process in which parameters are identified as likely to be discharged by a facility, evaluated with respect to Ohio water quality criteria, and examined to determine the likelihood that the existing effluent could violate the calculated limits. In addition, antidegradation and whole effluent toxicity issues must be addressed.

As in past modeling studies, all facilities discharging to the Mahoning River mainstem between the Leavittsburg dam and the Ohio-Pennsylvania boundary are considered interactive and are included in the wasteload allocation (WLA). The WLA contains a total of 23 outfalls from 6 municipal WWTPs and 7 industrial facilities, as follows:

| | |
|---|---|
| Warren Steel Holdings (CSC Industries) | Thomas Steel Strip |
| BDM Warren Steel | ArcelorMittal-Warren |
| Warren WWTP | RMI-Niles |
| NRG Niles Power | Niles WWTP |
| McDonald Steel | Campbell WWTP |
| Youngstown WWTP | Lowellville WWTP |
| Struthers WWTP | |

Four dischargers located on tributaries are allocated separately from the mainstem discharges: Meander Creek WWTP (Meander Creek), Girard WWTP (Little Squaw Creek), Mosquito Creek WWTP (Mosquito Creek), and Boardman WWTP (Mill Creek). Travel time to and distance from the Mahoning River are considered large enough that, for modeling purposes, the effluents from the respective treatment plants are considered non-interactive with the direct dischargers to the Mahoning. Effluents from these four treatment plants were allocated to meet water quality standards for the conditions, habitat, and use designation for their particular receiving waters and separate Permit Support Documents were prepared for each facility. Monitoring was conducted downstream of these dischargers or at the mouths of these tributaries, however, for inputs into the Mahoning River mainstem model.

A schematic representation of the study area can be found in Figure 2.

*Parameter Selection* Effluent data for the NRG Niles Power Plant were used to determine what parameters should undergo wasteload allocation. The sources of effluent data are as follows:

| | |
|---|---|
| Self-monitoring data (DMRs) | January 2006 through September 2011 |
| Form 2.C. application data | 2011 |

The data from these dates was compared with more recent DMR data, and is believed to be more representative than 2009-13 data because of larger data sets and more consistent operation of the generating units. The effluent data were checked for outliers and no values were eliminated from the data set.

This data is evaluated statistically, and Projected Effluent Quality (PEQ) values are calculated for each pollutant. Average PEQ ($PEQ_{avg}$) values represent the 95$^{th}$ percentile of monthly average data, and maximum PEQ ($PEQ_{max}$) values represent the 95$^{th}$ percentile of all data points. The average and maximum PEQ values are presented in Table 11.

The PEQ values are used according to Ohio rules to compare to applicable water quality standards (WQS) and allowable wasteload allocation (WLA) values for each pollutant evaluated. Initially, PEQ values are compared to the applicable average and maximum WQS. If both PEQ values are less than 25 percent of the applicable WQS, the pollutant does not have the reasonable potential to cause or contribute to exceedances of WQS, and no wasteload allocation is done for that parameter. If either $PEQ_{avg}$ or $PEQ_{max}$ is greater than 25 percent of the applicable WQS, a wasteload allocation is conducted to determine whether the parameter exhibits reasonable potential and needs to have a limit or if monitoring is required. See Tables 15-18 for a summary of the screening results.

Outfall 001 contains a large discharge of once-through non-contact cooling water and a small discharge of boiler blowdown from Outfall 604. Ohio EPA believes that several of these pollutants do not have the reasonable potential to contribute to excursions above WQS. Ohio EPA may make this determination based on the considerations of OAC 3745-2-06(C)(2). Under this rule, Ohio EPA may make a finding of no reasonable potential if:

- 100% of the water containing the pollutant is withdrawn from the same body of water that the effluent is discharged to;
- The facility process adds no mass to the discharge;
- The facility does not alter the pollutant so that it has the reasonable potential to cause or contributes to excursions above WQS;
- The facility does not increase pollutant concentrations at the edge of the mixing zone; and
- The timing and location of the discharge would not cause adverse water quality impacts to occur that would not occur if the identified intake pollutant were left instream.

The once-through cooling water is drawn from the Mahoning River; the boiler blowdown water is purchased from the City of Warren. Warren's city water is withdrawn from the Mosquito Creek reservoir. Mosquito Creek enters the Mahoning River less than 1.0 mile upstream of the Niles Plant. Pollutants from Mosquito Creek would pass the Niles plant outfalls if not diverted by the Warren water system. Therefore pollutants that originate from Mosquito Creek can be considered from the same body of water as the Mahoning River.

The data from Table 6 shows that the Niles Plant does not add additional mass of the following pollutants to the final discharge: carbonaceous biochemical oxygen demand (CBOD5), chemical oxygen demand (COD), fluoride, sulfate, organic nitrogen, barium, boron, magnesium, mercury and zinc. These pollutants are either not present in boiler blowdown wastewaters, or do not add pollutants (within the standard error of measurement). The facility neither alters these pollutants so that they exhibit reasonable potential, does not increase concentrations of the pollutants in the Mahoning River, nor alters the timing or location of the discharge so as to cause adverse water quality impacts to occur.

While copper concentrations are within the normal range of concentrations expected in the Mahoning River, the cooling water could conceivably contribute copper to the River. Ohio EPA is choosing to regulate copper losses from piping with BMP requirements and is not allocating copper to this discharge. Also, bis-2-ethylhexylphthalate is not being allocated to any of the NRG discharges because Ohio EPA believes that its presence may be due to sampler contamination. The Agency knows of no reason why bis-2EHP should be present, but is proposing monitoring of the process discharges by grab sample to determine if this compound is present in the discharge.

The following pollutants are being evaluated in this wasteload allocation because the effluent concentrations are higher than those in the plant intake, or are known to be added due to federal effluent guideline data or boiler water additive approvals: aluminum, ammonia-nitrogen, iron, manganese, phosphorus and total dissolved solids.

*Water Quality Standards*
Ohio water quality standards (WQS) were used for all parameters except for chronic cadmium, chronic lead, chronic chromium$^{+6}$ diss., chronic selenium and chronic iron. The Mahoning River enters Pennsylvania at about river mile (RM) 11.43, and Pennsylvania WQS must be met at that point. The Pennsylvania Aquatic Life criteria and Human Health criteria were met at the state line for all other parameters (metals and organics).

*Flows in the Mahoning River*
Flows in the Mahoning River are contributed by a series of reservoirs in the headwaters and on Mosquito Creek, controlled and mostly owned by the U.S. Army Corps of Engineers. Constructed several decades ago to provide adequate flow for the steel industry of the Mahoning River valley, the reservoirs are operated on a schedule to maintain specific seasonal flows at Leavittsburg and Youngstown. The operation of the reservoir system is discussed at length in earlier USEPA Mahoning River studies (Amendola et al., 1977; Schregardus and Amendola, 1984).

*Modeling Approach and Wasteload Allocations*
Appropriate effluent concentrations for dischargers to the Mahoning River were determined using two models: a Monte Carlo model for the six commonly allocated metals (cadmium, chromium (total), copper, lead, nickel, and zinc) and the conventional Ohio EPA conservative parameter model (CONSWLA) for all other parameters. The models and their applications are discussed in the sections that follow and model inputs are presented.

Allocations are developed using a percentage of stream design flow (as specified in Table 13), and allocations cannot exceed the Inside Mixing Zone Maximum criteria. The data used in the WLAs are listed in Tables 12 and 13. The wasteload allocation results to maintain all applicable criteria are presented in Table 14.

*Dissolved Metals Translators*
A dissolved metals translator (DMT) is the factor used to convert a dissolved metal aquatic life criterion to an effective total recoverable aquatic life criterion with which a total recoverable aquatic life allocation can be calculated as required in the NPDES permit process. Currently, a DMT is based on site- or area-specific field data; each field data sample consists of a total recoverable measurement paired with a dissolved metal measurement. For Mahoning River, there were 5 such paired samples available applicable to copper, lead, and silver. To account for the limited quantity of data, the DMT for each of these metals was determined as the lower end of the 95% confidence interval (1-tail) about the geometric

mean of the total recoverable-to-dissolved ratios of the sample pairs. A DMT for zinc, cadmium, chromium, and nickel could not be determined due to shortcomings in the data. Each DMT is metal-specific and is applied by multiplying the dissolved criteria by the DMT, resulting in total effective recoverable criteria which can be used in the wasteload allocation procedures.

***The Monte Carlo Model***

The application of the Monte Carlo method was limited to the six commonly allocated metals (cadmium, chromium (total), copper, lead, nickel, and zinc). Previous allocations, using the conventional Ohio EPA conservative parameter model, resulted in stringent limits for these parameters that have been difficult for dischargers to maintain. As a result, the Ohio EPA was asked to consider other methods for determining effluent limits that would adequately protect the river while allowing the dischargers some relief. The Monte Carlo method addresses these concerns but does not guarantee more favorable discharge limits. This is the third permit cycle where a Monte Carlo method was used to determine the wasteload allocations for the six metals listed above.

Conventional water quality modeling methods project the receiving water pollutant concentration which will occur under critical low-flow conditions. The Monte Carlo probabilistic method, as applied to water quality modeling, projects the year-round probability distribution for the pollutant. This allows a more accurate determination of the frequency at which water quality criteria are violated or maintained. Conventional modeling methods, when applied to systems with numerous dischargers, may be overly conservative because they model all dischargers at their maximum permitted concentration. The more dischargers modeled, the more unlikely it is that all will discharge at their maximum level at the same time <u>and</u> at critical low-flow conditions. The Monte Carlo method accounts for the independent variability of discharges as well as other model inputs.

The Monte Carlo model for the Mahoning River was originally developed by Limno-Tech, Inc., for their 1993 study to determine alternative copper limits for Thomas Strip Steel. The model combines the Monte Carlo statistical method with a multi-discharge mass-balance model and allows upstream flow to be input from a historical gaging station flow record, in order to to account for unusual flow fluctuations caused by the numerous upstream dams and reservoirs. Ohio EPA approved the alternative limits developed using this model and received permission to modify and apply the model in the future. The original model was written in 1992-1993 in Borland Pascal. For this permit cycle, the model has been modified by the Ohio EPA and re-written in the ‘C’ programming language.

*River Hardness and Water Quality Criteria*

Water quality criteria for the six metals depends on instream hardness. Thus, hardness is a key element in determining effluent limits. A detailed analysis of the available hardness and flow data was conducted. This analysis revises and updates the Ohio EPA analysis previously performed in 2002. Stream hardness data was taken from the two main STORET stations on the Mahoning River main stem, at Leavittsburg, Ohio (RM 45.51) and at Lowellville, Ohio (RM 12.42). The hardness data for the two stations was analyzed for the period January 1997 to October 2006.

A linear correlation between the Leavittsburg USGS gaging station flow and instream hardness was determined for both STORET stations. These correlations were then used to calculate hardness as a function of river mile at 129 cfs (Leavittsburg 1Q10 low flow) and 136 cfs (7Q10 low flow).

<u>Acute Criteria, at 1Q10</u>

river hardness (mg/L) = (-0.575)(river mile) + 184.534

Chronic Criteria, at 7Q10

river hardness (mg/L) = (-0.575)(river mile) + 184.291

Discharger hardness was calculated with these equations. This relationship established local river hardness for calculating outside-mixing-zone, hardness-dependent criteria in the Monte Carlo model. Inside-mixing-zone, maximum criteria were determined with effluent hardness data when available, or outside-mixing-zone hardness when effluent data was unavailable.

Table 2 contains the water quality criteria for the six metals in the vicinity of the NRG Niles Power plant.

This Monte Carlo method uses a thirty-day averaging period with a ten-year return period for meeting chronic (average) water quality criteria. A one-day averaging period with a ten-year return period is used for meeting the acute (maximum) water quality criteria. Since the chronic aquatic life criteria are less than or approximate to both the agriculture and human health criteria and since the return periods for both agriculture and human health criteria would be longer than ten years, the allocations that meet the average aquatic life criteria will be protective of the agriculture and human health criteria as well.

Federal rules require that a downstream state's water quality criteria be considered when calculating effluent limits. The Pennsylvania state line is at RM 11.43. Pennsylvania's standards are the same as Ohio's for copper, total chromium, nickel, and zinc. However, Pennsylvania's standards for cadmium and lead are more stringent than Ohio's and had to be considered. Since Pennsylvania uses, in effect, a one hundred-day return period, Ohio's acute criteria for those two metals, in combination with a ten-year return period, still meet Pennsylvania's water quality criteria. However, the same is not true for the chronic criteria.

Table 2. Water Quality Criteria for Monte Carlo Model Parameters (NRG Niles)

| | Outside Mixing Zone Criteria | | | | Inside Mixing Zone Maximum |
|---|---|---|---|---|---|
| | Average | | | Maximum | |
| Parameter (µg/L) | Human Health | Agri-culture[A] | Aquatic Life[B] | Aquatic Life[B] | |
| Cadmium | - | 50. | 0.39 [G] | 7.9 | 29. [C] |
| Chromium, total | - | 100. | 130. | 2700. | 5500. [D] |
| Copper | 1300. | 500. | 15.[F] | 24.[F] | 73. [C]<br>45. [D] |
| Lead | - | 100. | 5.6 [F,G] | 240.[F] | 900.[C]<br>470.[D] |
| Nickel | 610. [G] | 200. | 80. | 720. | 2200.[C]<br>1400. [D] |
| Zinc | 69000. | 25000. | 180. | 180. | 570. [C]<br>370. [D] |

[A] There is some uncertainty regarding the return period used to develop the Agricultural Water Supply (AWS) criteria. Therefore, the AWS criteria for the Monte Carlo model are presented for information purposes only.
[B] Based on river hardness of 165 mg/L (applies to all outfalls).
[C] Based on effluent hardness of 277 mg/L (applies to outfall 002).
[D] Based on effluent hardness of 166 mg/L (applies to outfall 008 & 009).
[F] Effective Criteria Based on Application of Dissolved Metal Translator.
[G] Pennsylvania WQC at the state line.

*Data Analysis for the Monte Carlo Model*

The Monte Carlo method accounts for individual system component variability by generating probability distributions that predict a range of possible input conditions. These distributions are derived from the mean and the coefficient of variation input by the user and based on field data for each of these components. Table 2 lists the calculated mean and coefficient of variation for such system characteristics as background/ambient concentrations and discharger and tributary flows.

Table 3. Monte Carlo Model Inputs

| Parameter | Mean | Coefficient of Variation Acute | Coefficient of Variation Chronic | Source |
|---|---|---|---|---|
| Mahoning River at Leavittsburg | | | | |
| Flow (MGD)[A] | -- | -- | -- | USGS |
| Cadmium (µg/L) | 0.0 | 0.0 | 0.0 | STORET |
| Chromium, total (µg/L) | 0.0 | 0.0 | 0.0 | STORET |
| Copper (µg/L) | 2.1 | 0.31 | 0.12 | STORET |
| Lead (µg/L) | 0.0 | 0.0 | 0.0 | STORET |
| Nickel (µg/L) | 2.8 | 0.18 | 0.07 | STORET |
| Zinc (µg/L) | 0.0 | 0.0 | 0.0 | STORET |
| Mosquito Creek at mouth | | | | |
| Flow (MGD) | 80.9 | 1.44 | 0.54 | USGS/SWIMS |
| Cadmium (µg/L) | 0.25 | 2.7 | 1.0 | STORET |
| Chromium, total (µg/L) | 0.0 | 0.0 | 0.0 | STORET |
| Copper (µg/L) | 2.4 | 0.7 | 0.27 | STORET |
| Lead (µg/L) | 0.0 | 0.0 | 0.0 | STORET |
| Nickel (µg/L) | 0.94 | 0.65 | 0.25 | STORET |
| Zinc (µg/L) | 11.3 | 1.3 | 0.47 | STORET |
| Meander Creek at mouth | | | | |
| Flow (MGD) | 3.61 | 0.3 | 0.11 | SWIMS |
| Cadmium (µg/L) | 0.0 | 0.0 | 0.0 | STORET |
| Chromium, total (µg/L) | 1.3 | 0.97 | 0.37 | STORET |
| Copper (µg/L) | 6.0 | 0.92 | 0.35 | STORET |
| Lead (µg/L) | 0.0 | 0.0 | 0.0 | STORET |
| Nickel (µg/L) | 8.1 | 1.4 | 0.53 | STORET |
| Zinc (µg/L) | 40. | 1.3 | 0.48 | STORET |
| Little Squaw Creek at mouth | | | | |
| Flow (MGD) | 3.6 | 0.44 | 0.17 | SWIMS |
| Cadmium (µg/L) | 0.15 | 2.7 | 1.0 | SWIMS |
| Chromium, total (µg/L) | 3.2 | 0.35 | 0.13 | SWIMS |
| Copper (µg/L) | 12. | 0.60 | 0.23 | SWIMS |
| Lead (µg/L) | 0.0 | 0.0 | 0.0 | SWIMS |
| Nickel (µg/L) | 9.8 | 0.87 | 0.33 | SWIMS |
| Zinc (µg/L) | 64. | 0.80 | 0.30 | SWIMS |

Table 3. Monte Carlo Model Inputs (continued)

| Parameter | Mean | Coefficient of Variation Acute | Coefficient of Variation Chronic | Source |
|---|---|---|---|---|
| Mill Creek at mouth | | | | |
| Flow (MGD) | 44.5 | 2.2 | 0.84 | USGS |
| Cadmium (µg/L) | 0.12 | 0.48 | 0.18 | STORET |
| Chromium, total (µg/L) | 0.0 | 0.0 | 0.0 | STORET |
| Copper (µg/L) | 2.4 | 0.70 | 0.26 | STORET |
| Lead (µg/L) | 4.1 | 1.9 | 0.74 | STORET |
| Nickel (µg/L) | 28.1 | 0.30 | 0.11 | STORET |
| Zinc (µg/L) | 13.5 | 1.87 | 0.71 | STORET |
| Discharger flows (MGD) | | | | |
| Warren Steel Holdings (CSC) | 0.76 | 0.94 | 0.35 | SWIMS |
| Thomas Steel Strip | 0.62 | 0.45 | 0.17 | SWIMS |
| RG Steel | | | | |
| 003 | 0.086 | 0.98 | 0.37 | SWIMS |
| 006 | 0.013 | 1.56 | 0.59 | SWIMS |
| 007 | 2.48[C] | 0.30 | 0.11 | SWIMS |
| 008 | 6.91 | 0.17 | 0.07 | SWIMS |
| Intake[B] | --.-- | --.-- | --.-- | --- |
| 013 | 34.3 | 0.11 | 0.04 | SWIMS |
| 010 | 0.24 | 0.72 | 0.27 | SWIMS |
| 011 | 1.47 | 0.60 | 0.23 | SWIMS |
| 012 | 0.14 | 0.47 | 0.18 | SWIMS |
| ArcelorMittal 014 | 2.58 | 0.44 | 0.17 | SWIMS |
| Warren WWTP | 14.9 | 0.49 | 0.19 | SWIMS |
| RMI - Niles | 0.35 | 0.51 | 0.19 | SWIMS |
| NRG Power | | | | |
| 002 | 2.7 | 0.43 | 0.16 | SWIMS |
| 008 | 0.001 | 0.0 | 0.0 | SWIMS |
| 009 | 1.0 | 0.0 | 0.0 | |
| Niles WWTP | 4.99 | 0.52 | 0.20 | SWIMS |
| McDonald Steel | 0.91 | 0.97 | 0.37 | SWIMS |
| Youngstown WWTP | 34.6 | 0.39 | 0.15 | SWIMS |
| Campbell WWTP | 2.1 | 0.55 | 0.21 | SWIMS |
| Struthers WWTP | 4.7 | 0.31 | 0.12 | SWIMS |
| Lowellville WWTP | 0.43 | 0.72 | 0.27 | SWIMS |

[A] Each iteration of the model sequentially selects an upstream flow from the historical flow record at this gage.

[B] Intake flow was set equal to the sum of the RG Steel effluent flows plus the Mittal flow, multiplied by 0.871. (12.9% of the RG Steel / Mittal flow comes from sources other than the intake.)

[C] Long-term average value reported on the application.

***The Conservative Substance Wasteload Allocation Model (CONSWLA)***
The Conservative Substance Wasteload Allocation Model (CONSWLA) was used to allocate all parameters not included in the Monte Carlo model. CONSWLA is the model Ohio EPA typically uses in multiple discharger situations. Contrary to the Monte Carlo model, CONSWLA model inputs for flow are fixed at their critical low levels and inputs for effluent flow are fixed at their design or 50th percentile levels. Background concentrations are fixed at a representative value (generally a 50th percentile). A mass balancing method is then used to allocate effluent concentrations that maintain WQS under these conditions. This technique is appropriate when data bases are unavailable to generate statistical distributions for inputs (like those used in the Monte Carlo method) and if the parameters modeled are conservative.

Discharge flows for NRG's wasteload allocations were determined from the facility's Discharge Monitoring Reports (DMRs). Ohio EPA used the 95$^{th}$ percentile of monthly average flows for Outfalls 001 and 002. DMR data were used to select flows for Outfalls 008 and 009.

*Temperature Wasteload Allocation*
Using outputs from the CONSWLA model, it appears that NRG's intake can withdraw virtually the entire critical flow of the Mahoning River through the plant. This means that the discharge from outfall 001 would need to meet temperature standards for the lower Mahoning River. These standards, listed in OAC Rule 3745-33-07 can be applied directly to the discharge. Expressed as monthly and daily limits, these standards would be:

Table 4. Temperature Standards/WLAs for the Mahoning River ($^{o}$F) as Monthly/Daily Limits

| Month | Monthly Avg. Limit | Daily Maximum Limit |
|---|---|---|
| January | 47 | 53 |
| February | 47 | 53 |
| March | 52 | 61 |
| April | 62 | 70 |
| May | 70.5 | 79 |
| June | 81 | 89 |
| July | 85 | 89 |
| August | 85 | 89 |
| September | 81.5 | 89 |
| October | 70 | 77 |
| November | 60 | 66 |
| December | 51 | 55 |

Note that this allocation does not include the effects of air temperature and humidity on the WLA results. Mass-balance models for temperature are more appropriate during the summer, when higher air

temperatures and higher humidities do not allow for air cooling of the river. During cooler weather, air temperatures help cool the river and allow elevated discharge temperatures to be better assimilated.

*Reasonable Potential*
After appropriate effluent limits are calculated (using the Monte Carlo and CONSWLA models), the reasonable potential of the discharger to violate the WLA (and the WQS) must be determined. Each parameter is examined and placed in a defined "group". Parameters that do not have a WQS or do not require a WLA based on the initial screening are assigned to either group 1 or 2. For the allocated parameters, the most restrictive average WLA and the maximum WLA were selected from Table 6. The average PEQ value (Table 3) is compared to the average PEL, and the maximum PEQ value is compared to the maximum PEL. Based on the calculated percentage of the respective average and maximum comparisons, the parameters are assigned to “groups”, as listed in Tables 15-18.

*Whole Effluent Toxicity WLA* Whole effluent toxicity (WET) is the total toxic effect of an effluent on aquatic life measured directly with a toxicity test. Acute WET measures short term effects of the effluent while chronic WET measures longer term and potentially more subtle effects of the effluent.

Water quality standards for WET are expressed in Ohio’s narrative “free from” WQS rule [OAC 3745-1-04(D)]. These “free froms” are translated into toxicity units (TUs) by the associated WQS Implementation Rule (OAC 3745-2-09). Wasteload allocations can then be calculated using TUs as if they were water quality criteria.

The wasteload allocation calculations for WET are similar to those for aquatic life criteria - using the chronic toxicity unit ($TU_c$) and 7Q10 flow for the average and the acute toxicity unit ($TU_a$) and 1Q10 flow for the maximum. These values are the levels of effluent toxicity that should not cause instream toxicity during critical low-flow conditions. An assessment of the biological and hydraulic data in the vicinity of NRG Niles indicated that the NRG outfalls outfalls are interactive with the McDonald Steel and Niles WWTP discharges for effluent acute toxicity. For NRG Niles, the acute toxicity WLA is 1.0 $TU_a$ for all outfalls. For chronic toxicity, each outfall is considered non-interactively. Following are the chronic toxicity allocations:

| **Outfall** | **$TU_c$** |
|---|---|
| 001 | 1.0 |
| 002 | 29.7 |
| 008 | 102926. |
| 009 | 67.6 |

The chronic toxicity unit ($TU_c$) is defined as 100 divided by the $IC_{25}$:

$$TU_c = 100/IC_{25}$$

This equation applies outside the mixing zone for warmwater, modified warmwater, exceptional warmwater, coldwater, and seasonal salmonid use designations except when the following equation is more restrictive (Ceriodaphnia dubia only):

$$TU_c = 100/\text{geometric mean of NOEC and LOEC}$$

The acute toxicity unit ($TU_a$) is defined as 100 divided by the $LC_{50}$ for the most sensitive test species:

$$TU_a = 100/LC_{50}$$

This equation applies outside the mixing zone for warmwater, modified warmwater, exceptional warmwater, coldwater, and seasonal salmonid use designations.

**Reasonable Potential/ Effluent Limits/Hazard Management Decisions**

After appropriate effluent limits are calculated, the reasonable potential of the discharger to violate the water quality standards must be determined. Each parameter is examined and placed in a defined "group". Parameters that do not have a water quality standard or do not require a wasteload allocation based on the initial screening are assigned to either group 1 or 2. For the allocated parameters, the preliminary effluent limits (PEL) based on the most restrictive average and maximum wasteload allocations are selected from Table 14. The average PEL ($PEL_{avg}$) is compared to the average PEQ ($PEQ_{avg}$) from Table 11, and the $PEL_{max}$ is compared to the $PEQ_{max}$. Based on the calculated percentage of the allocated value [($PEQ_{avg} \div PEL_{avg}$) X 100, or ($PEQ_{max} \div PEL_{max}$) X 100)], the parameters are assigned to group 3, 4, or 5. The groupings are listed in Tables 15-18.

The final effluent limits are determined by evaluating the groupings in conjunction with other applicable rules and regulations. Tables 19-23 present the final effluent limits and monitoring requirements proposed for NRG's outfalls and the basis for their recommendation.

*Requirements Applicable to All Outfalls*
The permit contains the effluent guideline prohibition on discharges of polychlorinated biphenyl compounds (PCBs) in Part II, Item H. Monitoring is not required because NRG has no PCB-containing equipment on-site, and any cleanups of former areas have been completed.

*Outfall 001/041 and Station 901*
Permit limits for residual chlorine, residual oxidants and the duration of chlorine/bromine discharges are being continued. Limits for residual chlorine are required because chlorine is a BAT parameter under the federal effluent regulations for steam electric power facilities. Limits on total residual oxidants reflect the use of bromine and bromine/chlorine mixtures for control of biofouling in the cooling system. The analytical method for these pollutants does not easily distinguish between bromine and chlorine, and limits are set for the total measurement (residual oxidants) as a result. NRG reports results for residual chlorine when only chlorine is used as a biocide, and reports residual oxidants when bromine or bromine/chlorine mixtures are used.

The chlorine limit is based on an analysis of the inside-mixing-zone maximum WQS when discharges of chlorine are limited to two hours per day. This information indicates that WQS can be significantly higher for a two hour per day exposure than when organisms are exposed for 48- to 96-hours, as is typical

of most acute aquatic toxicity tests. The 120 minute limit on chlorine/bromine duration regulates the exposure time so that chlorine levels will not exceed WQS.

The limit for residual oxidants is based on data submitted by the Chemical Manufacturers Association to U.S. EPA Region V that shows bromine being approximately four times as toxic as chlorine. The discharge limit for residual oxidants is therefore set at ¼ of the chlorine limit.

Outfall 041 is a set of alternate limits for Outfall 001. These limits apply in unusual cases when the Niles Plant needs to use chlorine or bromine for more than two hours per day. The limits for total residual chlorine and total residual oxidants are based on the wasteload allocation for chlorine and the Region V guidance on bromine discharges.

Limits proposed for pH are based on Water Quality Standards (OAC 3745-1-07).

The existing temperature limits are based on the company's 316(a) demonstration, and the thermal management limits negotiated between the previous operators of this plant and Ohio EPA in 1986. Ohio EPA believes that these limits are still appropriate, and will provide for a balanced, indigenous biological community, as explained below.

First, the temperature discharged by this outfall has the reasonable potential to cause or contribute to exceedances of WQS for temperature. In the previous section of this fact sheet, we showed that the WQ-based limits to meet temperature standards are essentially the WQS at the discharge point. Comparing the summer and winter season WQS with the effluent PEQ values for these seasons shows that the discharge exceeds these WQS at times:

Table 5. Temperature PEQ Values and WQS ($^{o}$F)

| Season | WQ-Based Limits | | PEQ Values | |
|---|---|---|---|---|
| | Monthly | Daily | Monthly | Daily |
| Summer | 85 | 89 | 90.9 | 106.8 |
| Winter | 47 | 53 | 65.9 | 72.2 |

Based on these values, summer effluent temperatures clearly have the reasonable potential to contribute to excursions above WQS. Because mass-balance models do not consider air temperature, it is not certain whether there is reasonable potential during the winter.

The 316(a) demonstration approved in 1986 contains temperature limits that are very similar to those approved in the permits for American Electric Power Company's Conesville and Muskingum River Plants. The thermal limits for the Conesville and Muskingum River Plants have allowed the local Muskingum River segments to meet Ohio's biological water quality standards in all recent surveys. We can project that balanced, indigenous communities will exist in the Muskingum River under all but very extreme weather/flow events.

The temperature limits and river water use at the Niles Plant are very similar to the river water uses at the Conesville and Muskingum River Plants. Based on the evidence above, Ohio EPA has concluded that temperature is not a limiting factor on Mahoning River biological communities. In the absence of other listed impacts on the river, it is reasonable to conclude that a balanced, indigenous biological community would exist near the Niles Plant. Therefore, the discharge limits approved under the 1986 316(a) demonstration are being continued in the new permit for the Niles Plant.

The temperature limits have three elements:

- No single daily temperature may exceed 92 degrees F;
- No more than 12 single-day temperature values may exceed 89 degrees F from June 15 to September 15; and
- No more than 20 seven-day moving average temperature values at this station may exceed 86.5 degrees F from June 15 to September 15.

Ohio EPA has made these judgments based on historical data and similar plant discharges. The Agency believes that an update to the local 316(a) studies needs to be made to keep the demonstration for the plant current. These alternate limits are meant to be reviewed and approved every five years. As a result, Ohio EPA has included a new Part II, Item M. in the permit that requires NRG to submit a study plan for a new 316(a) demonstration if the plant once-through cooling water discharge resumes.

The Ohio EPA risk assessment (Table 16) places iron in group 5 which recommends limits to protect water quality. Because of the small data set for iron, the PEQ values may not be representative of the discharge. Using the discretion allowed the Director under OAC 3745-33-07(A)(5), we are proposing monitoring, rather than limits, for this pollutant.

As previously noted, Ohio EPA is regulating copper at this outfall through BMPs for corrosion control, rather than effluent limits. Also, quarterly monitoring for bis(2-ethylhexy)phthalate using manual composite samples is included in the draft permit to determine whether bis-2EHP is present in the discharge, or is a laboratory contaminant. Semi-annual monitoring for the residuals of boiler chemicals (ammonia and phosphorus) is included to determine if this discharge contributes any of these pollutants to the Mahoning River.

*Outfall 002*

Limits for Total Suspended Solids and Oil&Grease are based on federal effluent guideline regulations for Steam Electric Power Generating Plants, 40 CFR 423, and best professional judgment. Because most of the wastewater volume from this outfall consists of treated fly ash, bottom ash and low volume wastewater, Ohio EPA used the effluent guidelines for these three processes (same concentration limits for all three), and adjusted the maximum TSS limit downward to account for the less concentrated wastewaters at this outfall (coal pile runoff, steam condensate and non-contact cooling water). The maximum TSS limit is being retained from the current permit because the percentages of flow from each source have not changed significantly since the last permit was written.

Limits proposed for pH are based on Water Quality Standards (OAC 3745-1-07). Because NRG monitors pH continuously at this outfall, the draft permit contains pH excursion language from 40 CFR 401.17. This rule allows an effluent to have short periods where pH limits are exceeded in exchange for

continuous monitoring. This requirement meets Ohio WQS in the Mahoning River due to dilution/assimilation in the river.

The Ohio EPA risk assessment (Table 16) places cadmium, mercury and silver in group 5. This placement as well as the data in Tables 7, 9 and 11 indicate that the reasonable potential to exceed WQS exists and limits are necessary to protect water quality. Pollutants that meet this requirement must have permit limits under OAC Rule 3745-33-07(A)(1). The thirty day average and maximum limits for cadmium and silver, and maximum limit for mercury are based on the wasteload allocation. Some of the loading limits for these parameters have been continued from the existing permit because NRG did not request additional loading limits in their application. Ohio EPA believes that NRG can currently meet the cadmium and silver limits at this outfall.

To comply with mercury limits, the permittee has applied for coverage under the general mercury variance, Rule 3745-33-07(D)(10) of the Ohio Administrative Code. Based on the results of low-level mercury monitoring, the permittee has determined that its wastewater treatment plant cannot meet the 30-day average water quality-based effluent limit (WQBEL) of 12 nanograms per liter (ng/l). However, the permittee believes that the plant will be able to achieve an annual average mercury effluent concentration of 12 ng/l. The variance application also demonstrated to the satisfaction of Ohio EPA that there is no readily apparent means of complying with the WQBEL without constructing prohibitively expensive end-of-pipe controls for mercury. Based on these factors, the permittee is eligible for coverage under the general mercury variance.

Ohio EPA has reviewed the mercury variance application and has determined that it meets the requirements of the Ohio Administrative Code. Item Y. in Part II of the draft NPDES permit list the provisions of the mercury variance, and includes the following requirements:

- A variance-based monthly average effluent limit of 25.2 ng/l, which was developed from sampling data submitted by the permittee;
- A requirement that the permittee make reasonable progress to meet the water-quality-based effluent limit for mercury by implementing the plan of study, which has been developed as part of the Pollutant Minimization Program (PMP);
- Low-level mercury monitoring of the plant's influent and effluent;
- A requirement that the annual average mercury effluent concentration is less than or equal to 12 ng/l as specified in the plan of study;
- A summary of the elements of the plan of study;
- A requirement to submit an annual report on implementation of the PMP; and
- A requirement for submittal of a certification stating that all permit conditions related to implementing the plan of study and the PMP have been satisfied, but that compliance with the monthly average water quality-based effluent limit for mercury has not been achieved.

The Ohio EPA risk assessment (Table 16) places iron in group 5 which recommends limits to protect water quality. Because of the small data set for iron, the PEQ values may not be representative of the discharge. Using the discretion allowed the Director under OAC 3745-33-07(A)(5), we are proposing monitoring, rather than limits, for this pollutant.

Ohio EPA risk assessment (Table 16) places barium, copper and selenium in group 4. This placement as well as the data in Tables 7, 9 and 11 support that these parameters do not have the reasonable potential to

contribute to WQS exceedances, and limits are not necessary to protect water quality. Monitoring for Group 4 pollutants (where PEQ exceeds 50 percent of the WLA) is required by OAC Rule 3745-33-07(A)(2).

In addition, the copper effluent quality falls within 75 percent of the wasteload allocation. Under OAC 3745-33-07(A)(2), parameters in this range must have a tracking requirement in the permit that specifies reductions in pollutant concentrations if effluent concentrations exceed the WLA. The tracking/reduction requirements are included in Part II Item L. of the draft permit.

Ohio EPA risk assessment (Table 16) places lead, zinc and total dissolved solids in groups 2/3. This placement as well as the data in Tables 7, 9 and 11 support that these parameters do not have the reasonable potential to contribute to WQS exceedances, and limits are not necessary to protect water quality. Monitoring of lead and zinc at a low frequency is proposed to document that these pollutants continue to remain at low levels and provide data inputs for future Monte Carlo models.

For TDS, Ohio EPA evaluated instream data collected in the Mahoning River at Lowellville, approximately one mile from the Ohio-Pennsylvania border (n = 128, range = 164 – 650 mg/l, period of record = January 1999 – January 2012). The Agency calculated summer and winter concentrations to characterize instream TDS levels. These concentrations are 95th percentiles of the monthly averages and daily values of the data. The calculated values are: monthly average – 364 mg/l (S), 456 mg/l (W); maximum – 423 mg/l (S), 587 mg/l (W).

These values are lower than the monthly average and maximum Pennsylvania TDS standards, 500 mg/l and 750 mg/l. This demonstrates that there is not reasonable potential for the instream TDS concentration to exceed the Pennsylvania standards at Lowellville, close to the state line. Based on this finding, water quality based effluent limits for TDS are not necessary for Ohio wastewater facilities discharging at their existing TDS loads.

Ohio EPA is pursuing a plan to begin regular TDS monitoring at a site in the lower part of the Mahoning River in Ohio. This monitoring would provide baseline data of ambient TDS concentrations with Ohio facilities discharging at their existing TDS loads. It would allow the Agency to watch for an upward trend in instream TDS that could result in reasonable potential for the violation of Pennsylvania's standards. In that case, the Agency would consider options for reducing the TDS load to the Mahoning River, which could include the need to control point sources.

Ohio EPA will evaluate proposals for new or increased TDS loadings to the Mahoning River from Ohio NPDES dischargers, which could be subject to provisions of Ohio's antidegradation rule (OAC 3745-1-05).

Ohio EPA did not allocate bis(2-ethylhexyl)phthalate to NRG's outfalls because it not clear that there is a source of this pollutant, and allocating NRG's outfalls would impact WLAs for many other dischargers on the Mahoning River. Bis-2EHP is not normally associated with electric power plant discharges. There is a possibility that bis-2EHP detections here are associated with tubing in automatic samplers. To assess this, the permit requires collection of bis-2EHP samples by manual composite.

*Outfall 008*

This is the discharge from a secondary sewage treatment plant on the site. The limits for CBOD5, Total Suspended Solids and Dissolved Oxygen are based on the plant design. These limits are equivalent to secondary treatment standards. These limits are protective of water quality standards.

The proposed limit for total residual chlorine is based on wasteload allocation as limited by the inside mixing zone maximum (IMZM). The IMZM is a value calculated to avoid rapidly lethal conditions in the effluent mixing zone.

Limits proposed for *E. coli* are based on Water Quality Standards (OAC 3745-1-07). ). *E. coli* limits and monitoring are replacing fecal coliform limits and monitoring due to new water quality standards. WQS for bacteria are based on *E. coli* rather than fecal coliform.

The draft permit would add pH limits at this outfall similar to other outfalls at this plant (and similar to sewage treatment plants at other industrial facilities). Observations of color and odor would be removed because Ohio EPA is no longer requiring these visual indicators to be reported for sewage plants; reporting of turbidity visual monitoring would still be required.

*Outfall 009/Internal Outfall 605*
Outfall 009 contains the discharge from internal sampling point 605 (boiler slag tank and precipitator drains), storm water and intake screen backwash. The discharge limits and most of the monitoring requirements are done at internal sampling station 605 because it represents the continuous discharges and sources of pollutant addition at the final outfall. Consistent with 40 CFR 122.45(h), monitoring and limits are proposed at this internal outfall. Effluent guideline limits are applied at this outfall to ensure that these treatment standards are met prior to combining with other waste streams. If monitoring was not done at this location, it would not be possible to verify compliance with these standards due to dilution. Federal rules at 40 CFR 125.3(f) prohibit attaining these standards by dilution.

The limits for TSS and oil&grease at Outfall 605 are based on the effluent guidelines for Low Volume Wastewaters in the Steam Electric Power Effluent Guidelines.

The Ohio EPA risk assessment for Outfall 009 (Table 18) places chlorine, copper, iron, and lead in group 5 which recommends limits to protect water quality. However, based on the small data set for these parameters, PEQ values may not be representative of the discharge. Using the discretion allowed the Director under OAC 3745-33-07(A)(5), we are proposing monitoring, rather than limits, for these pollutants. In addition, we are placing the monitoring requirements at internal outfall 605 because this internal station represents virtually the entire flow of Outfall 009 during dry weather.

We are extending this risk assessment to mercury temporarily, even though there is an adequate data base for this parameter, because this discharge is shut down along with the coal-fired units. The permit contains a Part II condition requiring NRG to submit plans 180 days before starting up coal-fired production units to comply with the 12 ng/l WQ-based limit, or submit a permit modification with a variance application.

Ohio EPA risk assessment (Table 18) places barium and zinc in group 4. This placement as well as the data in Tables 8, 9 and 11 supports that these parameters do not have the reasonable potential to contribute to WQS exceedances, and limits are not necessary to protect water quality. Monitoring for

Group 4 pollutants (where PEQ exceeds 50 percent of the WLA) is required by OAC Rule 3745-33-07(A)(2). Again, we are placing the monitoring requirements for these parameters at internal outfall 605.

*Internal Outfall 604*
This internal outfall is a small boiler blowdown discharge tributary to Outfall 001. The limits for TSS and oil&grease at this outfall are based on the effluent guidelines for Low Volume Wastestreams from the Steam Electric Power Effluent Guidelines.

*Internal Outfall 606*
This is a small sewage treatment plant discharge tributary to the Outfall 002 treatment system. The limits proposed for total suspended solids, 5-day carbonaceous biochemical oxygen demand ($CBOD_5$) and fecal coliform are all based on plant design criteria. These limits are protective of water quality standards. Ohio EPA is not switching the bacteria performance standard at this outfall to *E. coli* because this is not a final outfall, and the bacteria limits are not based on water quality standards. The permit contains a monitoring requirement for e. coli. to assess the treatment plant's ability to kill these organisms.

Monitoring for ammonia-nitrogen and turbidity are proposed to continue to assess treatment plant operations.

Additional monitoring requirements proposed at the final effluent, influent and upstream/downstream stations are included for all facilities in Ohio and vary according to the type and size of the discharge. In addition to permit compliance, this data is used to assist in the evaluation of effluent quality and treatment plant performance and for designing plant improvements and conducting future stream studies.

*Whole Effluent Toxicity Reasonable Potential*
Based on evaluating the whole effluent toxicity data presented in Table 10 and other pertinent data under the provisions of OAC 3745-33-07(B), NRG's Outfall 002 is placed in Category 3 with respect to whole effluent toxicity. Of the six acute toxicity tests available, 5 met the wasteload allocation of 1.0 TUa, and one value was well over the allocation (3.0 TUa). The evaluation metrics for this data primarily lie in Category 3, and the Agency is proposing to continue the annual acute toxicity testing requirement for this outfall. Chronic testing is not being required because the chronic toxicity allocation (29.7 TUc) for this outfall is high enough with respect to the acute WLA, providing a high level of certainty that acute toxicity is limiting for this discharge.

Toxicity monitoring and limits are not being required for Outfalls 001, 008 and 009 because Ohio EPA believes that chemical-specific controls are sufficient to control effluent toxicity at these outfalls.

## Other Requirements

*Operator Certification*
Operator certification requirements have been included in Part II, Item A. of the permit in accordance with rules adopted in December 2006. These rules require the NRG sewage treatment plants to have a Class A wastewater treatment plant operator in charge of the sewage treatment plant operations discharging through outfalls 008 and 606. The permit conditions allow modified staffing requirements when the plants are operated in non-discharging mode. To modify staffing requirements, NRG would need to submit a Seasonal Operations Form to Ohio EPA's Northeast District Office.

*Operator of Record*
In December 2006, Ohio Administrative Code rule revisions became effective which affect the requirements for certified operators for sewage collection systems and treatment works regulated under NPDES permits. Part II, Item A. of this NPDES permit represents language necessary to implement rule 3745-7-02 of the Ohio Administrative Code (OAC), and requires the permittee to designate one or more operator of record to oversee the technical operation of the treatment works.

*Storm Water Compliance*
Parts IV, V, and VI have been included with the draft permit in order to ensure that storm water flows from the facility site are properly regulated and managed. Part IV contains storm water pollution prevention requirements; Part V includes monitoring requirements; Part VI contains definitions related to the storm water requirements.

*Outfall Signage*
Part II of the permit includes requirements for signs to be placed at each non-storm water outfall to the Mahoning River, providing information about the discharge. Signage at outfalls is required pursuant to Ohio Administrative Code 3745-33-08(A).

*Section 316(b) Compliance*
Ohio EPA cannot consider the Niles Plant's intake structure to be Best Technology Available for prevention of fish impingement and entrainment. Studies submitted with the application indicate that reductions in entrainment may need to be done to meet BTA requirements; also, Ohio EPA has identified some methodological problems with the study that has caused the Agency to doubt the accuracy of some of the findings – See Attachment B. The study identified fish impinged that have never been found in the Mahoning River, and species identification in some cases was questionable.

However, the draft permit does not include immediate reductions in entrainment because the intake structure is not currently in operation. Ohio EPA has included provisions in Part II of the permit requiring the plant to meet federal BTA standards after a re-start of coal-fired units.

The current permit for the Niles Plant requires the company to submit the following information with the permit renewal application:

- Source water physical data;
- Cooling water intake structure data;
- Cooling water system data; and
- Rates of impingement and entrainment of fish and shellfish at the facility's cooling water intake structure based on sampling at the facility.

The plant has three travelling screens although plant operations vary considerably in terms of the number of screens used at any one time.

According to the company's 2006 study, the Niles Plant impinges very few fish. A total of 12 fish were collected in 483.7 hours of sampling completed over twenty sampling events in 2006. Eleven of the 12 fish collected were gizzard shad; the remaining fish was a bluegill sunfish. Crayfish were also collected in several separate sampling events as well as one softshell turtle and one bullfrog tadpole. Only one screen was sampled during these events. Adjusting the impingement rates by multiplying the total event

impingements by the total number of screens operating during the sampling event resulted in an adjusted total impingement of 28 fish.

Entrainment sampling was completed during January to September 5, 2006, with one sample collected during darkness and one during daylight. Samples collected from January 23 through May 22 events contained no ichthyoplankton. Peak entrainment was observed during the July 17 sampling event, with 20.96 larvae per 100 cubic meters; this represented 68% of the total observed entrainment during the study. By the July 31 event, entrainment had declined to 1.65 larvae per 100 m3.

With the exception of the June 5 sampling event 95-100% of entrainment occurred during night sampling. However, most power generation at Niles is during daylight hours.

No eggs were identified in any of the entrainment samples collected, and a vast majority of all entrainment was larval organisms.

Common carp yolk sac larvae accounted for 61% of the entrained speciments collected. Other species entrained included sunfish species, gizzard shad, white perch and 10 other species.

When data are extrapolated for actual water withdrawal during the inter-event periods during 2006 the estimated annual entrainment is approximately 2.4 million ichthyoplankton. The consultant performing the sampling believes that certain observed event entrainment may have been episodic in nature, and hence extrapolation over the entire inter-event period may overestimate actual entrainment.

Actual water withdrawal for 2006 was approximately 50% of the design intake volume. At full design flow the estimated annualized impingement would be approximately 3.1 million ichthyoplankton.

Figure 1. Approximate location of the NRG Niles Power Plant.

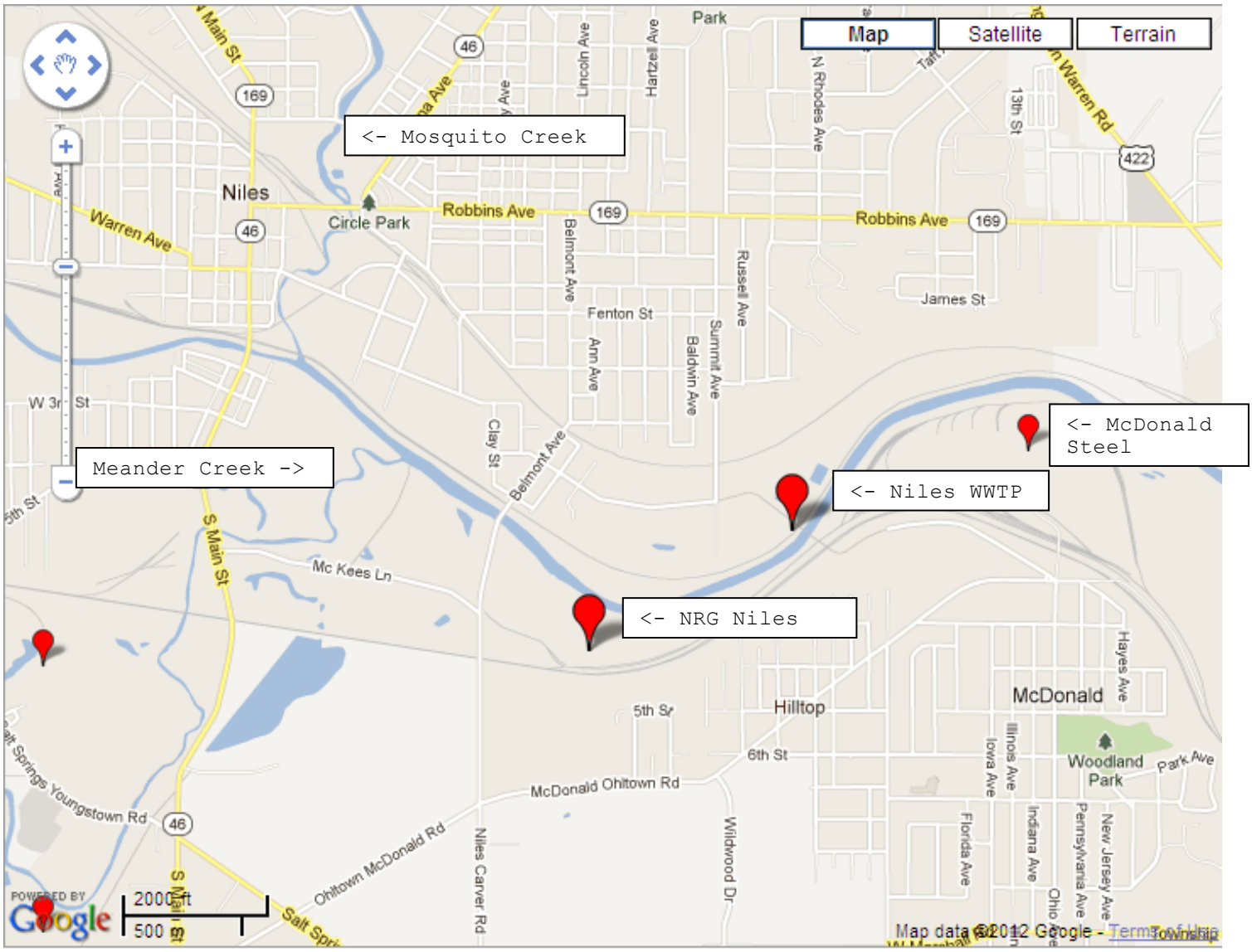

Figure 2. Mahoning River Study Area

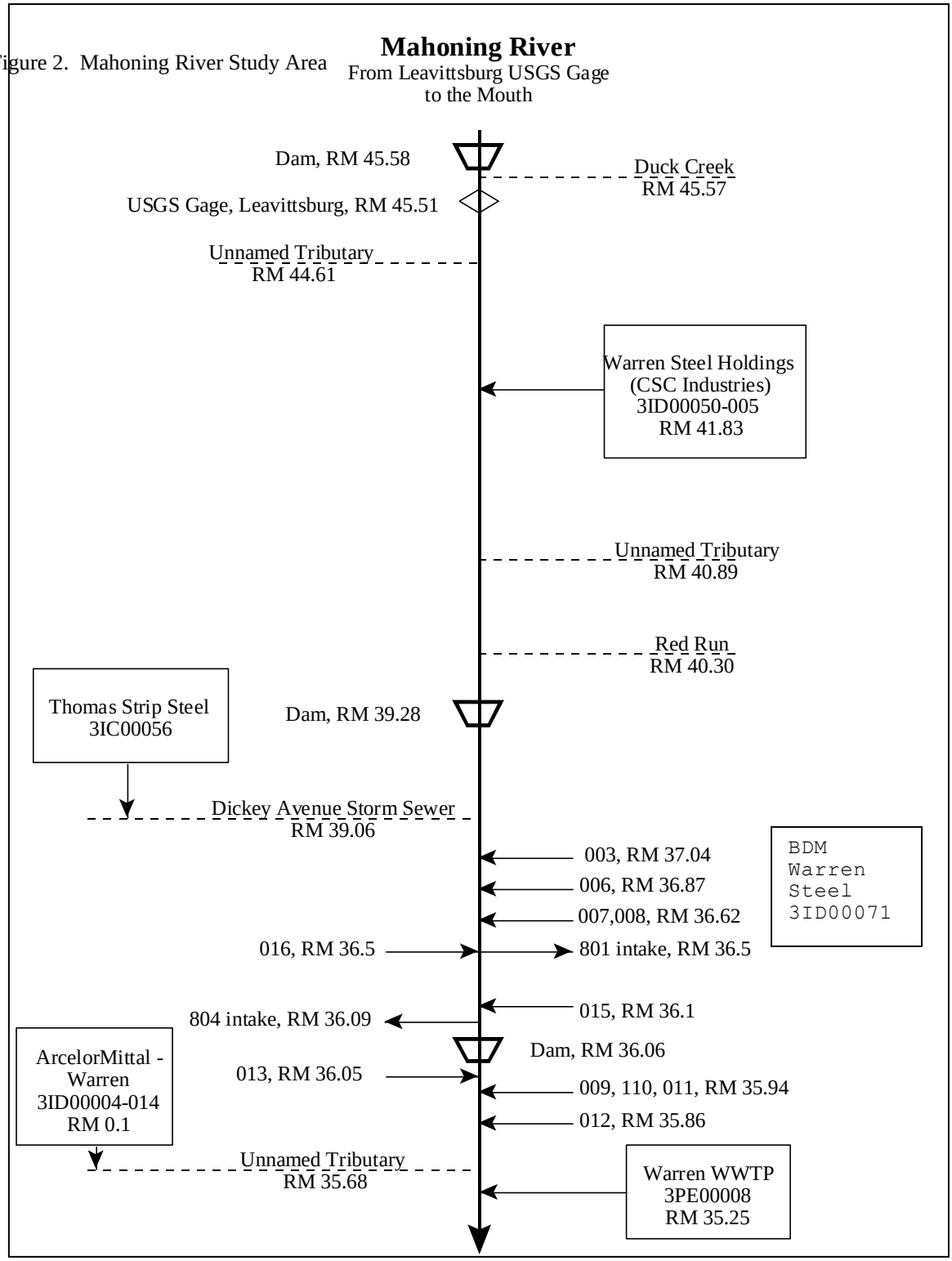

Figure 2. Mahoning River Study Area (Continued)

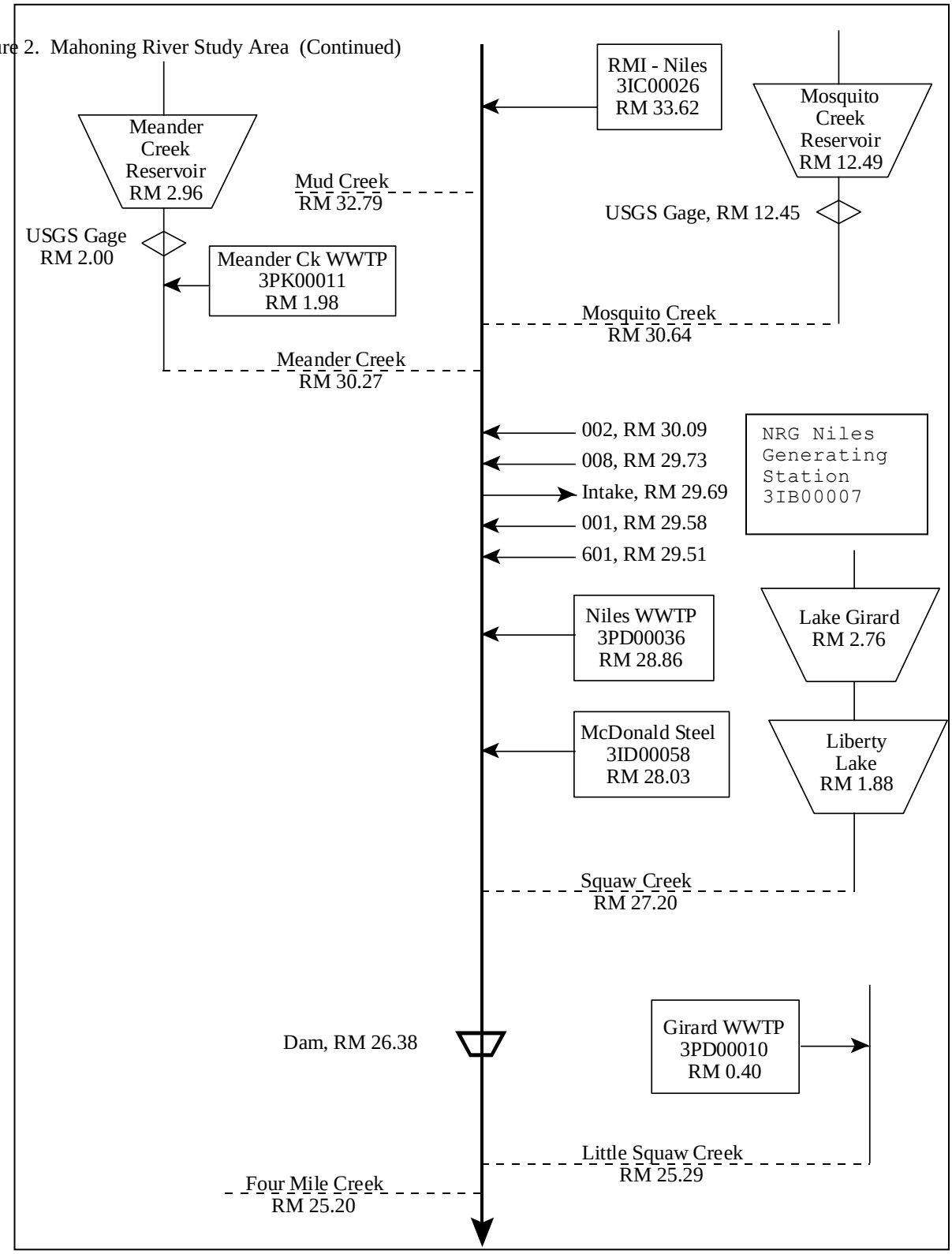

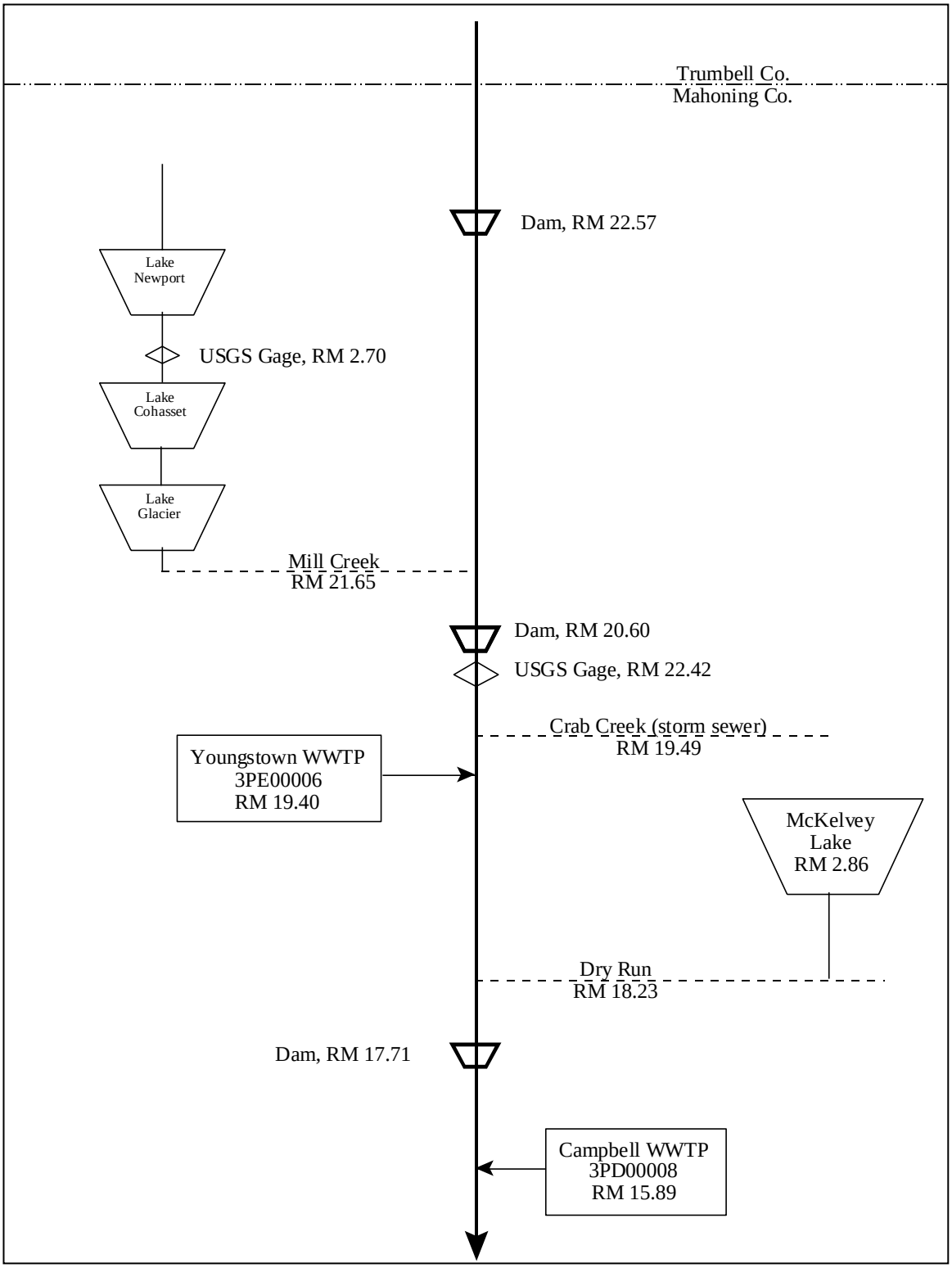


Figure 2. Mahoning River Study Area (Continued)

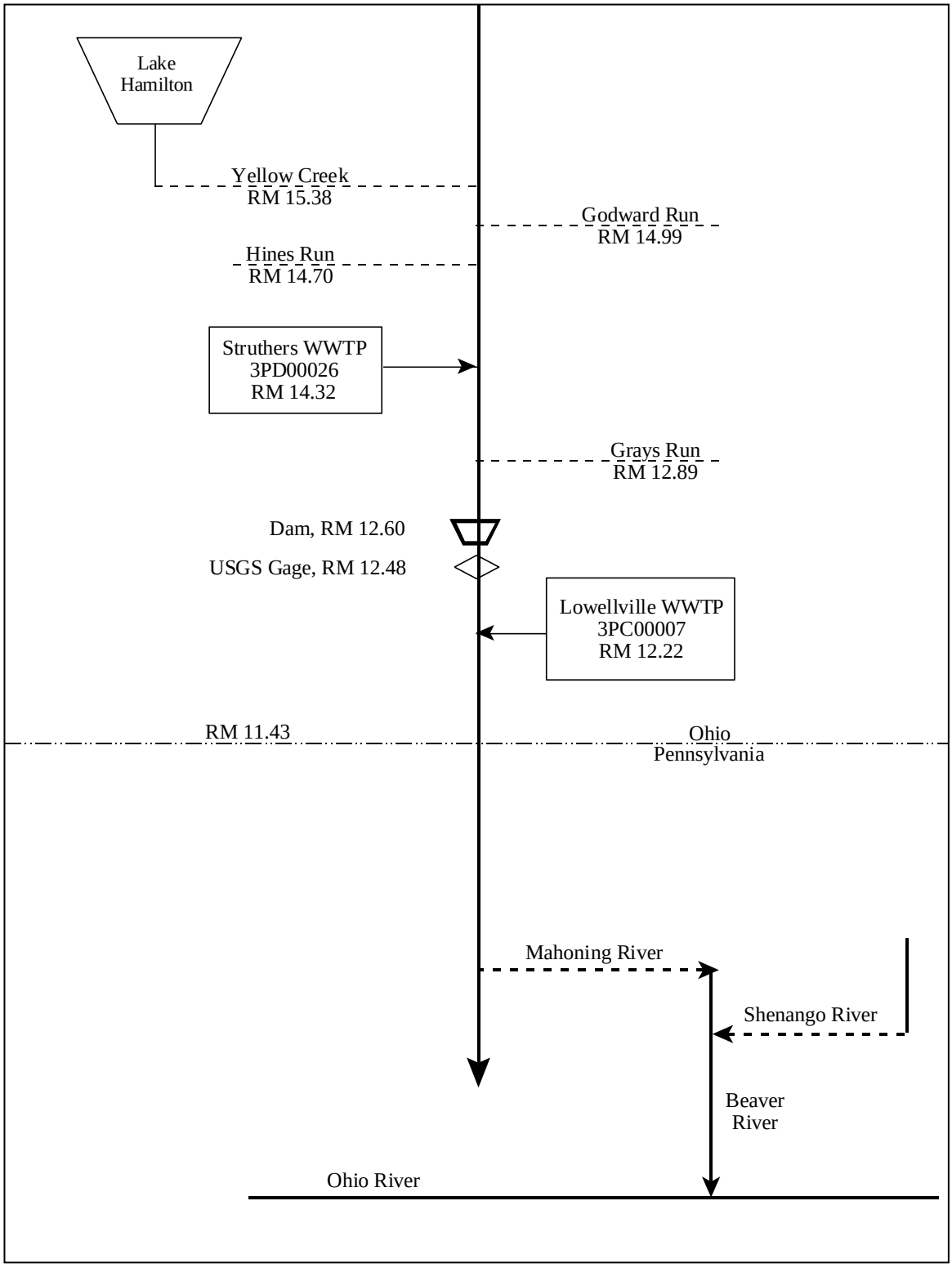


Figure 2. Mahoning River Study Area (Continued)

Table 6. Effluent Characterization Using Application Form 2C Data

Summary of analytical results for NRG outfall 3IB00007001 and intake 3IB00007801. All values are in ug/l unless otherwise indicated. 2C = Data from application form 2C; OEPA = data from analyses by Ohio EPA; ND = below detection (detection limit); NA = not analyzed. Decision Criteria: $PEQ_{avg}$ = monthly averages; $PEQ_{max}$ = daily maximum analytical results. Shaded areas show pollutants not allocated because they appear to come from intake concentrations and do not have the reasonable potential to contribute to WQS exceedances.

| | Intake 801 | | Outfall 001 | | Outfall 604 | | DECISION CRITERIA | |
|---|---|---|---|---|---|---|---|---|
| PARAMETER | N | maximum | N | maximum | N | maximum | $PEQ_{avg}$ | $PEQ_{max}$ |
| BOD5 mg/l | 1 | 2.48 | 1 | 3.28 | 1 | <2.0 | | |
| COD mg/l | 1 | 30 | 1 | 52.9 | 1 | <10 | | |
| Sus. Solids mg/l | 1 | 26 | 1 | 16.5 | 1 | <5 | | |
| Chlorine, TR mg/l | 1 | 0.21 | 1 | <0.02 | 1 | 0.02 | | |
| Fluoride mg/l | 1 | 0.30 | 1 | 0.242 | 1 | <0.1 | | |
| Sulfate mg/l | 1 | 40.7 | 1 | 37.0 | 1 | 7.41 | | |
| Ammonia-N mg/l | 1 | <0.1 | 1 | 0.638 | 1 | 0.201 | | |
| Organic N mg/l | 1 | 1.16 | 1 | 0.962 | 1 | 0.351 | | |
| Phosphorus mg/l | 1 | 0.224 | 1 | 0.147 | 1 | 2.66 | | |
| Aluminum | 1 | 371 | 1 | 1610 | 1 | 342 | 7287 | 9982 |
| Barium | 1 | 47.5 | 1 | 56.6 | 1 | <5.0 | | |
| Boron | 1 | 103 | 1 | 128 | 1 | <10.0 | | |
| Copper | 1 | 7.8 | 1 | 14.3 | 1 | 12.9 | | |
| Iron | 1 | 1100 | 1 | 1820 | 1 | <50 | 8237 | 11284 |
| Magnesium mg/l | 1 | 8.21 | 1 | 8.65 | 1 | <0.05 | | |
| Manganese | 1 | 195 | 1 | 1570 | 1 | <5.0 | 7106 | 9734 |
| Mercury ng/l | 1 | 2.65 | 1 | 2.13 | 1 | 3.39 | | |
| Zinc | 1 | 33.8 | 1 | 42.8 | 1 | <10 | | |
| Bis(2-ethylhexyl)-Phthalate | 1 | <10 | 1 | 38.2 | 1 | 21.4 | | |

Table 7. Effluent Characterization Using Application Form 2C Data

Summary of analytical results for NRG outfall 3IB00007002. All values are in ug/l unless otherwise indicated. 2C = Data from application form 2C; OEPA = data from analyses by Ohio EPA; ND = below detection (detection limit); NA = not analyzed. Decision Criteria: $PEQ_{avg}$ = monthly averages; $PEQ_{max}$ = daily maximum analytical results.

| | Outfall 002 | | | DECISION CRITERIA | |
|---|---|---|---|---|---|
| PARAMETER | N | mean | maximum | $PEQ_{avg}$ | $PEQ_{max}$ |
| BOD5 mg/l | 1 | -- | 3.96 | | |
| COD mg/l | 1 | -- | 32.1 | | |
| Sus. Solids mg/l | 1 | -- | 14.5 | | |
| Chlorine, TR mg/l | 1 | -- | 0.13 | | |
| Fluoride mg/l | 1 | -- | 0.358 | 1.62 | 2.22 |
| Sulfate mg/l | 1 | -- | 163 | 737.7 | 1011 |
| Ammonia-N mg/l | 1 | -- | 2.63 | 7.32 | 11.81 |
| Organic N mg/l | 1 | -- | 0.42 | | |
| Phosphorus mg/l | 1 | -- | 0.851 | 3.82 | 5.276 |
| Aluminum | 2 | 1475 | 2750 | 1486 | 2620 |
| Arsenic | 2 | 73 | 146 | | |
| Barium | 2 | 62.5 | 68.8 | 190.9 | 261.4 |
| Beryllium | 2 | 1.13 | 2.26 | 6.269 | 8.588 |
| Boron | 2 | 717 | 723 | 3691 | 5980 |
| Cadmium | 2 | 7.42 | 12.4 | 5.396 | 8.235 |
| Chromium | 2 | 3.64 | 7.28 | 20.19 | 27.66 |
| Cobalt | 2 | 11.7 | 17.8 | 49.38 | 67.64 |
| Copper | 2 | 49.2 | 80.6 | 46.43 | 63.6 |
| Iron | 2 | 4894 | 9300 | 25798 | 35340 |
| Lead | 2 | 11.8 | 18.4 | 9.61 | 14.78 |
| Magnesium mg/l | 2 | 9.495 | 9.720 | 26.96 | 36.94 |
| Manganese | 2 | 285 | 436 | 1209 | 1657 |
| Mercury ng/l | 1 | -- | 4.93 | 16.23 | 25.22 |
| Molybdenum | 2 | 28.6 | 33.4 | 92.65 | 126.9 |
| Nickel | 2 | 45.6 | 62 | 172 | 235.6 |
| Thallium | 2 | 9.0 | 18 | 40.71 | 66.72 |
| Titanium | 2 | 55.5 | 111 | 307.9 | 421.8 |
| Zinc | 2 | 266 | 470 | 185.7 | 274.3 |
| Bis(2-ethylhexyl)-Phthalate | 1 | -- | 49.5 | | |

Table 8. Effluent Characterization Using Application Form 2C Data

Summary of analytical results for NRG outfall 3IB00007008 and 3IB00007009. All values are in ug/l unless otherwise indicated. 2C = Data from application form 2C; OEPA = data from analyses by Ohio EPA; ND = below detection (detection limit); NA = not analyzed. Decision Criteria: $PEQ_{avg}$ = monthly averages; $PEQ_{max}$ = daily maximum analytical results.

| | Outfall 008 | | | DECISION CRITERIA | |
|---|---|---|---|---|---|
| PARAMETER | N | mean | maximum | $PEQ_{avg}$ | $PEQ_{max}$ |
| BOD5 mg/l | 1 | -- | 3.02 | | |
| COD mg/l | 1 | -- | 35.7 | | |
| Sus. Solids mg/l | 1 | -- | 9.0 | | |
| Chlorine, TR mg/l | 1 | -- | 0.04 | 0.026 | 0.036 |

| | Outfall 009 | | | DECISION CRITERIA | |
|---|---|---|---|---|---|
| PARAMETER | N | mean | maximum | $PEQ_{avg}$ | $PEQ_{max}$ |
| COD mg/l | 1 | -- | 22.8 | | |
| Sus. Solids mg/l | 1 | -- | 24 | | |
| Chlorine, TR mg/l | 1 | -- | 0.06 | 0.272 | 0.372 |
| Fluoride mg/l | 1 | -- | 0.333 | 1.507 | 2.065 |
| Sulfate mg/l | 1 | -- | 77.8 | 352.1 | 482.4 |
| Oil/grease mg/l | 1 | -- | 4.21 | | |
| Organic N mg/l | 1 | -- | 1.27 | | |
| Phosphorus mg/l | 1 | -- | 0.534 | 2.417 | 3.311 |
| Aluminum | 1 | -- | 517 | 2340 | 3205 |
| Barium | 1 | -- | 44.1 | 199.6 | 273.4 |
| Boron | 1 | -- | 137 | 620.1 | 849.4 |
| Chromium | 1 | -- | 6.48 | 29.33 | 40.18 |
| Copper | 1 | -- | 10 | 45.26 | 62.0 |
| Iron | 1 | -- | 1090 | 4933 | 6758 |
| Lead | 1 | -- | 6.6 | 29.87 | 40.92 |
| Magnesium mg/l | 1 | -- | 7.7 | 34.85 | 47.74 |
| Manganese | 1 | -- | 119 | 538.6 | 737.8 |
| Mercury ng/l | 1 | -- | 50.3 | 227.7 | 311.9 |
| Molybdenum | 1 | -- | 5.02 | 22.72 | 31.12 |
| Nickel | 1 | -- | 30.9 | 139.9 | 191.6 |
| Titanium | 1 | -- | 27.2 | 123.1 | 168.6 |
| Zinc | 1 | -- | 38.5 | 174.3 | 238.7 |
| Bis(2-ethylhexyl)-Phthalate | 1 | -- | 22.5 | | |

Table 9. Effluent Characterization Using Self-Monitoring Data

Summary of current permit limits and unaltered monthly operating report (MOR) data for NRG Niles outfalls. All values are based on annual records unless otherwise indicated. N = Number of Analyses. * = For pH, 5th percentile shown in place of 50th percentile; ** = limited by thermal load management conditions. Decision Criteria: $PEQ_{avg}$ = monthly average; $PEQ_{max}$ = daily maximum analytical results.

| Parameter | Season | Units | Current Permit Limits | | # Obs. | Percentiles | | Data Range | Decision Criteria | | |
|---|---|---|---|---|---|---|---|---|---|---|---|
| | | | 30 day | Daily | | 50th | 95th | | # Obs. | $PEQ_{ave}$ | $PEQ_{max}$ |
| **Outfall 001** | | | | | | | | | | | |
| Water Temperature | Annual | F | ** | 92 | 2024 | 71.2 | 97.1 | 34.6-110 | | | |
| pH | Annual | S.U. | 6.5 to 9.0 | | 236 | 7.74 | 8 | 6.9-8.4 | | | |
| Flow Rate | Summer | MGD | Monitor | | 802 | 96.5 | 193 | 2.3-193 | | | |
| Flow Rate | Winter | MGD | Monitor | | 792 | 82.1 | 111 | 4.6-193 | | | |
| Flow Rate | Annual | MGD | Monitor | | 1594 | 96.5 | 193 | 2.3-193 | | | |
| Chlorine, Total Residual | Annual | mg/l | -- | 0.02 | 695 | 0 | 0 | 0-0.001 | 694 | 0.438 | 0.60 |
| Chlorine, Total Residual | Annual | kg/day | -- | -- | 693 | 0 | 0 | 0-0.306 | | | |
| Chlorination/Bromination Duration | Annual | Minutes | -- | 120 | 693 | 60 | 120 | 20-120 | | | |
| **Outfall 002** | | | | | | | | | | | |
| Water Temperature | Annual | C | Monitor | | 32 | 16 | 26 | 3-26 | | | |
| Total Suspended Solids | Annual | mg/l | 30 | 70 | 574 | 10 | 22 | 1-37 | | | |
| Total Suspended Solids | Annual | kg/day | 454 | 1060 | 574 | 98.8 | 365 | 1.51-548 | | | |
| Oil and Grease, Total | Annual | mg/l | 15 | 20 | 41 | 0 | 0 | 0-0 | | | |
| Oil and Grease, Total | Annual | kg/day | 227 | 302 | 41 | 0 | 0 | 0-0 | | | |
| Oil and Grease, Hexane Extr Method | Annual | mg/l | 15 | 20 | 32 | 0 | 0 | 0-0 | | | |

| | | | | | | | | | | | |
|---|---|---|---|---|---|---|---|---|---|---|---|
| Oil and Grease, Hexane Extr Method | Annual | kg/day | 227 | 302 | 32 | 0 | 0 | 0-0 | | | |
| Nitrogen, Ammonia (NH3) | Summer | mg/l | -- | -- | 19 | 3 | 7.63 | 0.9-7.9 | 13 | 7.32 | 11.81 |
| Nitrogen, Ammonia (NH3) | Winter | mg/l | -- | -- | 22 | 3 | 4.8 | 0.7-4.9 | 11 | 4.196 | 5.606 |
| Nitrogen, Ammonia (NH3) | Summer | kg/day | -- | -- | 19 | 39.7 | 95.9 | 10.2-105 | | | |
| Nitrogen, Ammonia (NH3) | Winter | kg/day | -- | -- | 22 | 36.3 | 96.2 | 4.16-107 | | | |
| Thallium, Total Recoverable | Annual | ug/l | Monitor | | 24 | 13.6 | 40.5 | 0-51 | 23 | 40.71 | 66.72 |
| Thallium, Total Recoverable | Annual | kg/day | -- | -- | 24 | 0.21 | 0.572 | 0-0.613 | | | |
| Boron, Total | Annual | ug/l | -- | -- | 13 | 1940 | 3270 | 796-3710 | 13 | 3691 | 5980 |
| Boron, Total | Annual | kg/day | -- | -- | 13 | 22.7 | 69.6 | 10.9-82.9 | | | |
| Silver, Total Recoverable | Annual | ug/l | Monitor | | 145 | 0 | 5.24 | 0-15.2 | 139 | 5.623 | 7.387 |
| Silver, Total Recoverable | Annual | kg/day | -- | -- | 145 | 0 | 0.0748 | 0-0.164 | | | |
| Zinc, Total Recoverable | Annual | ug/l | Monitor | | 114 | 93.6 | 203 | 19.1-285 | 111 | 185.7 | 274.3 |
| Zinc, Total Recoverable | Annual | kg/day | -- | -- | 114 | 0.917 | 2.56 | 0.112-4.11 | | | |
| Antimony, Total | Annual | ug/l | -- | -- | 13 | 3.2 | 15 | 0-19.4 | 12 | 22.66 | 31.04 |
| Antimony, Total | Annual | kg/day | -- | -- | 13 | 0.04 | 0.319 | 0-0.397 | | | |
| Aluminum, Total Recoverable | Annual | ug/l | -- | -- | 13 | 630 | 1560 | 190-1650 | 13 | 1486 | 2620 |
| Aluminum, Total Recoverable | Annual | kg/day | -- | -- | 13 | 7.39 | 33.6 | 2.52-33.7 | | | |
| Cadmium, Total Recoverable | Annual | ug/l | 5.13 | 29 | 146 | 1.2 | 6 | 0-13.9 | 140 | 5.396 | 8.235 |
| Cadmium, Total Recoverable | Annual | kg/day | 0.078 | 0.44 | 146 | 0.00795 | 0.0781 | 0-0.194 | | | |
| Lead, Total Recoverable | Annual | ug/l | Monitor | | 94 | 3.65 | 13.4 | 0-20.2 | 93 | 9.61 | 14.78 |
| Lead, Total Recoverable | Annual | kg/day | -- | -- | 94 | 0.0428 | 0.131 | 0-0.185 | | | |
| Copper, Total Recoverable | Annual | ug/l | -- | 66 | 146 | 23.5 | 54.7 | 0-79.5 | 140 | 46.43 | 63.6 |
| Copper, Total Recoverable | Annual | kg/day | -- | 0.99 | 146 | 0.208 | 0.662 | 0-1.05 | | | |
| Selenium, Total (Se) | Annual | ug/l | -- | -- | 82 | 0 | 8.55 | 0-17.8 | 82 | 7.06 | 11.03 |
| Selenium, Total (Se) | Annual | kg/day | -- | -- | 82 | 0 | 0.0627 | 0-0.283 | | | |
| Oxidants, Total Residual | Annual | mg/l | -- | -- | 71 | 0.0016 | 0.06 | 0.0003-10 | 68 | 0.013 | 0.020 |
| Oxidants, Total Residual | Annual | kg/day | -- | -- | 71 | 0.017 | 0.471 | 0.00303-79.5 | | | |
| Flow Rate | Annual | MGD | Monitor | | 2191 | 2.6 | 4.8 | 0.1-6.9 | | | |
| Mercury, Total (Low Level) | Annual | ng/l | 12 | 1700 | 88 | 5.39 | 19.4 | 0-30 | 85 | 16.23 | 25.22 |
| Mercury, Total (Low Level) | Annual | kg/day | 0.0002 | 0.03 | 88 | 5.87E-05 | 0.00029 | 0-0.000411 | | | |

| | | | | | | | | | | | |
|---|---|---|---|---|---|---|---|---|---|---|---|
| Acute Toxicity, Ceriodaphnia dubia | Annual | TUa | Monitor | | 6 | 0 | 2.25 | 0-3 | | | |
| Acute Toxicity, Pimephales promelas | Annual | TUa | Monitor | | 6 | 0.2 | 0.375 | 0-0.4 | | | |
| pH, Maximum | Annual | S.U. | -- | 9.0 | 2191 | 7.7 | 8.4 | 6.9-9.1 | | | |
| pH, Minimum | Annual | S.U. | -- | 6.5 | 2191 | 7.5 | 8.1 | 6.3-8.5 | | | |

**Outfall 008**

| | | | | | | | | | | | |
|---|---|---|---|---|---|---|---|---|---|---|---|
| Flow Rate | Annual | GPD | Monitor | | 83 | 1000 | 1000 | 1000-1000 | | | |
| Color, Severity | Annual | Units | Monitor | | 1517 | 0 | 0 | 0-2 | | | |
| Dissolved Oxygen | Summer | mg/l | -- | 5.0 | 36 | 7 | 22.3 | 5-25 | | | |
| Dissolved Oxygen | Winter | mg/l | -- | 5.0 | 36 | 9 | 12 | 5-15 | | | |
| Total Suspended Solids | Annual | mg/l | 30 | 45 | 73 | 10 | 23 | 2-25 | | | |
| Total Suspended Solids | Annual | kg/day | 0.11 | 0.17 | 70 | 0.0379 | 0.0836 | 0.00757-0.0946 | | | |
| Nitrogen, Ammonia (NH3) | Summer | mg/l | Monitor | | 25 | 0.9 | 5.26 | 0-7 | 19 | 3.099 | 5.513 |
| Nitrogen, Ammonia (NH3) | Winter | mg/l | Monitor | | 31 | 3 | 11 | 0-13 | 13 | 11.33 | 15.52 |
| Nitrogen, Ammonia (NH3) | Summer | kg/day | -- | -- | 23 | 0.00341 | 0.0209 | 0-0.0265 | | | |
| Nitrogen, Ammonia (NH3) | Winter | kg/day | -- | -- | 29 | 0.0114 | 0.0379 | 0.00189-0.0454 | | | |
| Odor, Severity | Annual | Units | Monitor | | 1518 | 0 | 0 | 0-1 | | | |
| Turbidity, Severity | Annual | Units | Monitor | | 1518 | 0 | 0 | 0-1 | | | |
| Fecal Coliform | Annual | #/100 ml | 1000 | 2000 | 40 | 10.5 | 930 | 0-1500 | | | |
| Chlorine, Total Residual | Annual | mg/l | -- | 0.038 | 77 | 0.005 | 0.0238 | 0.0002-0.034 | 0.026 | 0.036 | |
| Chlorine, Total Residual | Annual | kg/day | -- | -- | 38 | 2.84E-05 | 8.93E-05 | 0.00000151-0.000121 | | | |
| CBOD 5 day | Summer | mg/l | 25 | 40 | 43 | 9 | 31.5 | 0-34 | | | |
| CBOD 5 day | Winter | mg/l | 25 | 40 | 37 | 4 | 15.5 | 0-26.4 | | | |
| CBOD 5 day | Summer | kg/day | 0.095 | 0.15 | 30 | 0.0322 | 0.111 | 0-0.126 | | | |
| CBOD 5 day | Winter | kg/day | 0.095 | 0.15 | 34 | 0.0132 | 0.0602 | 0-0.0999 | | | |

**Outfall 009**

| | | | | | | | | |
|---|---|---|---|---|---|---|---|---|
| Flow Rate | Annual | MGD | Monitor | | 27 | 1 | 2 | 1-2 |

**Outfall 604**

| | | | | | | | | |
|---|---|---|---|---|---|---|---|---|
| Flow Rate | Annual | GPD | Monitor | | 65 | 2000 | 2000 | 1000-2000 |
| Total Suspended Solids | Annual | mg/l | 30 | 100 | 65 | 0 | 5 | 0-8 |
| Total Suspended Solids | Annual | kg/day | -- | -- | 65 | 0 | 0.0379 | 0-0.0606 |
| Oil and Grease, Total | Annual | mg/l | 15 | 20 | 65 | 0 | 0 | 0-0 |
| Oil and Grease, Total | Annual | kg/day | -- | -- | 63 | 0 | 0 | 0-0 |

**Outfall 605**

| | | | | | | | | |
|---|---|---|---|---|---|---|---|---|
| Total Suspended Solids | Annual | mg/l | 30 | 100 | 72 | 19.5 | 29.5 | 5-67 |
| Total Suspended Solids | Annual | kg/day | 227.1 | 757 | 72 | 96.5 | 215 | 18.9-507 |
| Oil and Grease, Total | Annual | mg/l | 15 | 20 | 65 | 0 | 0 | 0-0 |
| Oil and Grease, Total | Annual | kg/day | 113.6 | 151.4 | 65 | 0 | 0 | 0-0 |
| Flow Rate | Annual | MGD | Monitor | | 1567 | 1 | 2 | 1-2 |
| Mercury, Total (Low Level) | Annual | ng/l | Monitor | | 10 | 19.5 | 60.4 | 4-68 |
| Mercury, Total (Low Level) | Annual | kg/day | -- | -- | 9 | 0.000106 | 0.000439 | 0.0000227-0.000515 |

**Outfall 606**

| | | | | | | | | |
|---|---|---|---|---|---|---|---|---|
| Flow Rate | Annual | GPD | Monitor | | 73 | 2500 | 2500 | 2500-2500 |
| Color, Severity | Annual | Units | Monitor | | 1454 | 0 | 0 | 0-2 |
| Total Suspended Solids | Annual | mg/l | 30 | 45 | 77 | 17 | 28.2 | 1-39 |
| Total Suspended Solids | Annual | kg/day | -- | -- | 73 | 0.151 | 0.265 | 0.00946-0.303 |

| | | | | | | | | |
|---|---|---|---|---|---|---|---|---|
| Nitrogen, Ammonia (NH3) | Summer | mg/l | Monitor | | 36 | 1 | 24.3 | 0-28.8 |
| Nitrogen, Ammonia (NH3) | Winter | mg/l | Monitor | | 36 | 1 | 20.8 | 0-28.7 |
| Nitrogen, Ammonia (NH3) | Summer | kg/day | -- | -- | 36 | 0.00946 | 0.229 | 0-0.273 |
| Nitrogen, Ammonia (NH3) | Winter | kg/day | -- | -- | 35 | 0.00946 | 0.199 | 0-0.272 |
| Odor, Severity | Annual | Units | Monitor | | 1454 | 0 | 0 | 0-1 |
| Turbidity, Severity | Annual | Units | Monitor | | 1454 | 0 | 0 | 0-1 |
| Fecal Coliform | Annual | #/100 ml | 1000 | 2000 | 59 | 0 | 297 | 0-700 |
| CBOD 5 day | Summer | mg/l | 25 | 40 | 38 | 0 | 8.3 | 0-40 |
| CBOD 5 day | Winter | mg/l | 25 | 40 | 37 | 0 | 9.4 | 0-27 |
| CBOD 5 day | Summer | kg/day | -- | -- | 36 | 0 | 0.0804 | 0-0.379 |
| CBOD 5 day | Winter | kg/day | -- | -- | 33 | 0 | 0.0927 | 0-0.255 |

Table 10. Summary of effluent acute toxicity test results for NRG Outfall 002.

| Test Date(a) | *Ceriodaphnia dubia 48 hours* | | | | | | *Fathead Minnows 96 hour* | | | | | |
|---|---|---|---|---|---|---|---|---|---|---|---|---|
| | UP[b] | C[c] | $LC_{50}$[d] | %M[e] | TUa[f] | NF[g] | UP[b] | C[c] | $LC_{50}$[d] | %M[e] | TUa[f] | NF[g] |
| 09/12/06 (E) | NT | NR | >100 | 0 | <1.0 | NT | NT | NR | >100 | 10 | <1.0 | NT |
| 09/12/07 (E) | NT | NR | >100 | 0 | <1.0 | NT | NT | NR | >100 | 20 | <1.0 | NT |
| 09/17/08 (E) | NT | NR | >100 | 0 | <1.0 | NT | NT | NR | >100 | 0 | <1.0 | NT |
| 09/10/09 (E) | NT | NR | 33 | 100 | 3 | NT | NT | NR | >100 | 10 | <1.0 | NT |
| 09/17/10 (E) | NT | NR | >100 | 0 | <1.0 | NT | NT | NR | >100 | 15 | <1.0 | NT |
| 09/19/11 (E) | NT | NR | >100 | 0 | <1.0 | NT | NT | NR | >100 | 0 | <1.0 | NT |
| 09/19/12 (E) | NT | NR | >100 | 0 | <1.0 | NT | NT | NR | >100 | 0 | <1.0 | NT |

[a] O = EPA test; E = entity test
[b] UP = upstream control water
[c] C = laboratory water control
[d] $LC_{50}$ = median lethal concentration
[e] %M = percent mortality in 100% effluent
[f] TUa = acute toxicity units
[g] NF = near field sample in the Mahoning River
NR = not reported in OEPA database
NT = not tested

Table 11. Effluent Data for NRG Niles Power Plant

| Parameter | Units | # of Samples | # > MDL | Average PEQ | Maximum PEQ |
|---|---|---|---|---|---|
| **Outfall 001 -** Self-Monitoring (DMR) Data | | | | | |
| Chlorine, tot. res. | µg/L | 694 | 3 | 0.438 | 0.60 |
| Form 2.C Application Data | | | | | |
| Aluminum | µg/L | 1 | 1 | 7287. | 9982. |
| Iron | µg/L | 1 | 1 | 8237. | 11284. |
| Manganese | µg/L | 1 | 1 | 7106. | 9734. |
| **Outfall 002 -** Self-Monitoring (DMR) Data | | | | | |
| Ammonia – S | mg/L | 13 | 13 | 7.32 | 11.81 |
| Ammonia – W | mg/L | 11 | 11 | 4.196 | 5.606 |
| Thallium | µg/L | 23 | 13 | 40.71 | 66.72 |
| Boron | µg/L | 13 | 13 | 3691. | 5980. |
| Silver | µg/L | 139 | 36 | 5.623 | 7.387 |
| Zinc | µg/L | 111 | 111 | 185.7 | 274.3 |
| Antimony | µg/L | 12 | 9 | 22.66 | 31.04 |
| Aluminum | µg/L | 13 | 13 | 1486. | 2620. |
| Cadmium | µg/L | 140 | 71 | 5.396 | 8.235 |
| Lead | µg/L | 93 | 61 | 9.61 | 14.78 |
| Copper | µg/L | 140 | 120 | 46.43 | 63.6 |
| Selenium | µg/L | 82 | 5 | 7.06 | 11.03 |
| Oxidants, tot. res. | mg/L | 68 | 68 | 0.013 | 0.020 |
| Mercury | ng/L | 85 | 83 | 16.23 | 25.22 |

Table 11. Effluent Data for NRG Niles Power Plant (continued)

| Parameter | Units | # of Samples | # > MDL | Average PEQ | Maximum PEQ |
|---|---|---|---|---|---|
| **Outfall 002 (cont.) -** Form 2.C Application Data | | | | | |
| Chlorine, tot. res. | µg/L | 1 | 1 | 588.4 | 806.0 |
| Fluoride | µg/L | 1 | 1 | 1620. | 2220. |
| Sulfate | mg/L | 1 | 1 | 737.7 | 1011. |
| Phosphorus | mg/L | 1 | 1 | 3.852 | 5.276 |
| Barium | µg/L | 2 | 2 | 190.9 | 261.4 |
| Beryllium | µg/L | 2 | 2 | 6.269 | 8.588 |
| Chromium, tot. | µg/L | 2 | 2 | 20.19 | 27.66 |
| Cobalt | µg/L | 2 | 2 | 49.38 | 67.64 |
| Iron | µg/L | 2 | 2 | 25798. | 35340. |
| Magnesium | mg/L | 2 | 2 | 26.96 | 36.94 |
| Manganese | µg/L | 2 | 2 | 1209. | 1657. |
| Molybdenum | µg/L | 2 | 2 | 92.65 | 126.9 |
| Nickel | µg/L | 2 | 2 | 172.0 | 235.6 |
| Titanium | µg/L | 2 | 2 | 307.9 | 421.8 |
| **Outfall 008 -** Self-Monitoring (DMR) Data | | | | | |
| Ammonia – S | mg/L | 19 | 15 | 3.099 | 5.513 |
| Ammonia - W | mg/L | 13 | 13 | 11.33 | 15.52 |
| Chlorine, tot. res.[A] | µg/L | 76 | 76 | 26.28 | 36.0 |
| **Outfall 009 -** Form 2.C Application Data | | | | | |
| Chlorine, tot. res. | µg/L | 1 | 1 | 271.6 | 372.0 |
| Fluoride | µg/L | 1 | 1 | 1507. | 2065. |
| Sulfate | mg/L | 1 | 1 | 352.1 | 482.4 |
| Phosphorus | mg/L | 1 | 1 | 2.417 | 3.311 |
| Aluminum | µg/L | 1 | 1 | 2340. | 3205. |
| Barium | µg/L | 1 | 1 | 199.6 | 273.4 |
| Boron | µg/L | 1 | 1 | 620.1 | 849.4 |
| Chromium tot. | µg/L | 1 | 1 | 29.33 | 40.18 |
| Copper | µg/L | 1 | 1 | 45.26 | 62.0 |
| Iron | µg/L | 1 | 1 | 4933. | 6758. |
| Lead | µg/L | 1 | 1 | 29.87 | 40.92 |
| Magnesium | mg/L | 1 | 1 | 34.85 | 47.74 |
| Manganese | µg/L | 1 | 1 | 538.6 | 737.8 |
| Mercury | ng/L | 1 | 1 | 227.7 | 311.9 |
| Molybdenum | µg/L | 1 | 1 | 22.72 | 31.12 |
| Nickel | µg/L | 1 | 1 | 139.9 | 191.6 |
| Titanium | µg/L | 1 | 1 | 123.1 | 168.6 |
| Zinc | µg/L | 1 | 1 | 174.3 | 238.7 |

[A] DMR/2.C.Application data combined.

Table 12. Water Quality Criteria in the Study Area

| Parameter | Units | Outside Mixing Zone Criteria: Average: Human Health | Average: Agri-culture | Average: Aquatic Life | Maximum Aquatic Life | Inside Mixing Zone Maximum |
|---|---|---|---|---|---|---|
| Ammonia - S | mg/L | -- | -- | 1.3 | -- | -- |
| Ammonia – W | mg/L | -- | -- | 4.0 | -- | -- |
| Antimony | µg/L | 4300. | -- | 190. | 900. | 1800. |
| Arsenic | µg/L | -- | 100. | 150. | 340. | 680. |
| Barium | µg/L | -- | -- | 220. | 2000. | 4000. |
| Beryllium [H] | µg/L | 280. | 100. | 25. | 220. | 480. |
| Bis(2-ethylhexyl)phthalate | µg/L | 59. | -- | 8.4 | 1100. | 2100. |
| Boron | µg/L | -- | -- | 3900. | 33000. | 65000. |
| Bromodichloromethane | µg/L | 460. | -- | -- | -- | -- |
| Bromoform | µg/L | 3600. | -- | 230. | 1100. | 2200. |
| Bromomethane | µg/L | 4000. | -- | 16. | 38. | 75. |
| Chlorine, tot. res. | µg/L | -- | -- | 11. | 19. | 38. |
| Chloroform | µg/L | 4700. | -- | 140. | 1300. | 2600. |
| Chromium $^{+6}$, diss. | µg/L | -- | -- | 10. [C] | 16. | 31. |
| Cobalt | µg/L | -- | -- | 24. | 220. | 440. |
| Cyanide, free | µg/L | 220000. | -- | 12. | 46. | 92. |
| Dibromochloromethane | µg/L | 340. | -- | -- | -- | -- |
| Fluoride | µg/L | -- | 2000. | -- | -- | -- |
| Iron | µg/L | -- | 5000. | 1500. [C] | -- | -- |
| Mercury [A] | ng/L | 12. | 10000. | 910. | 1700. | 3400. |
| Methyl Bromide | µg/L | 4000. | -- | 16. | 38. | 75. |
| Methylene Chloride | µg/L | 16000. | -- | 1900. | 11000. | 22000. |
| Molybdenum | µg/L | -- | -- | 20000. | 190000. | 370000. |
| Naphthalene | µg/L | -- | -- | 21. | 170. | 340. |
| Nitrate+Nitrite | mg/L | -- | 100. | -- | -- | -- |
| Phenol | µg/L | 4600000. | -- | 400. | 4700. | 9400. |
| Selenium | µg/L | 11000. | 50. | 4.6 [C] | -- | -- |
| Silver | µg/L | _ | _ | 1.3 | 24. [D] | 49. [D] |
| Strontium | µg/L | -- | -- | 21000. | 40000. | 81000. |
| Tetrachloroethylene | µg/L | 89. | -- | 53. | 430. | 850. |
| Thallium | µg/L | 6.3 | -- | 17. | 79. | 160. |
| Tin | µg/L | -- | -- | 180. | 1600. | 3200. |
| Toluene | µg/L | 200000. | -- | 62. | 560. | 1100. |
| Total Dissolved Solids | mg/L | -- | -- | 1500. | -- | -- |
| Total Dissolved Solids | mg/L | -- | -- | 500. [C] | -- | -- |

[A] Bioaccumulative Chemical of Concern (BCC)
[C] Pennsylvania Water Quality Criteria.
[D] Effective Criteria Based on Application of Dissolved Metal Translator.
[H] Aquatic Life Criteria Based on hardness of 169.mg/l. IMZM based on hardness of 180. mg/l.

Table 13. Instream Conditions and Discharger Flows for the CONSWLA Model

| Parameter | Units/Outfall | | Value | Basis |
|---|---|---|---|---|
| Mahoning River Upstream | | | | |
| 7Q10 | cfs | annual | 136. | USGS gage #03094000, 1969-2010 data |
| 1Q10 | cfs | annual | 129. | USGS gage #03094000, 1969-2010 data |
| 30Q10 | cfs | summer | 186. | USGS gage #03094000, 1969-2010 data |
| | cfs | winter | 192. | USGS gage #03094000, 1969-2010 data |
| HMQ | cfs | annual | 383. | USGS gage #03094000, 1969-2010 data |
| Meander Creek at mouth | | | | |
| 7Q10 | cfs | annual | 6.19 | USGS gage #03097500, 1929-51 data |
| 1Q10 | cfs | annual | 6.19 | USGS gage #03097500, 1929-51 data |
| 30Q10 | cfs | summer | 6.19 | USGS gage #03097500, 1929-51 data |
| | cfs | winter | 6.19 | USGS gage #03097500, 1929-51 data |
| HMQ | cfs | annual | 6.19 | USGS gage #03097500, 1929-51 data |
| Mosquito Creek at mouth | | | | |
| 7Q10 | cfs | annual | 10.6 | USGS gage #03095500, 1954-91 data |
| 1Q10 | cfs | annual | 9.47 | USGS gage #03095500, 1954-91 data |
| 30Q10 | cfs | summer | 14.0 | USGS gage #03095500, 1954-91 data |
| | cfs | winter | 12.6 | USGS gage #03095500, 1954-91 data |
| HMQ | cfs | annual | 28.0 | USGS gage #03095500, 1954-91 data |
| Mill Creek at mouth | | | | |
| 7Q10 | cfs | annual | 9.99 | USGS gage #03098500, 1952-71 data |
| 1Q10 | cfs | annual | 9.87 | USGS gage #03098500, 1952-71 data |
| 30Q10 | cfs | summer | 10.7 | USGS gage #03098500, 1952-71 data |
| | cfs | winter | 15.7 | USGS gage #03098500, 1952-71 data |
| HMQ | cfs | annual | 14.3 | USGS gage #03098500, 1952-71 data |
| Discharger Flow (cfs) | | | | |
| Warren Steel Holdings | 005 | | 2.01 | DSW Permits Staff |
| Thomas Steel Strip | 001 | | 1.83 | DSW Permits Staff |
| RG Steel Warren | 003 | | 0.34 | DSW Permits Staff |
| | 006 | | 0.08 | DSW Permits Staff |
| | 007 | | 3.84 | DSW Permits Staff |
| | 008 | | 13.4 | DSW Permits Staff |
| | 010 | | 0.77 | DSW Permits Staff |
| | 011 | | 4.56 | DSW Permits Staff |
| | 012 | | 0.38 | DSW Permits Staff |
| | 013 | | 57.6 | DSW Permits Staff |
| ArcelorMittal Warren | 014 | | 6.50 | DSW Permits Staff |
| Warren WWTP | 001 | | 24.8 | DSW Permits Staff |
| RMI-Niles | 001 | | 0.743 | DSW Permits Staff |
| Niles WWTP | 001 | | 9.59 | DSW Permits Staff |
| McDonald Steel | 001 | | 2.82 | DSW Permits Staff |

Table 13. Instream Conditions and Discharger Flows for the CONSWLA Model - Continued.

| Parameter | Units/Outfall | | Value | Basis |
|---|---|---|---|---|
| Discharger Flow | cfs | | | |
| Mosquito Creek WWTP | 001 | | 6.50 | DSW Permits Staff |
| Meander Creek WWTP | 001 | | 6.19 | DSW Permits Staff |
| Boardman WWTP | 001 | | 7.74 | DSW Permits Staff |
| NRG Niles Power | 001 | | 264.6 | DSW Permits Staff |
| | 002 | | 6.92 | DSW Permits Staff |
| | 008 | | 0.002 | DSW Permits Staff |
| | 009 | | 3.09 | DSW Permits Staff |
| Girard WWTP | 001 | | 7.74 | DSW Permits Staff |
| Youngstown WWTP | 001 | | 54.2 | DSW Permits Staff |
| Campbell WWTP | 001 | | 2.94 | DSW Permits Staff |
| Struthers WWTP | 001 | | 9.28 | DSW Permits Staff |
| Lowellville WWTP | 001 | | 0.792 | DSW Permits Staff |
| Mixing Assumption | % | average | 100 | Stream-to-discharge ratio |
| | % | maximum | 100 | Stream-to-discharge ratio |
| Background Water Quality | | | | |
| Ammonia | mg/L | summer | 0.09 | STORET [C]: 22 values,4<MDL, 2006-11 |
| Ammonia | mg/L | winter | 0.10 | STORET [C]: 12 values,3<MDL, 2006-11 |
| Arsenic | µg/L | annual | 2.0 | STORET [C]; 38 values, 17<MDL, 2006-2011 |
| Beryllium | µg/L | annual | 0. | No representative data available. |
| Bis-2EHP | µg/L | annual | 0. | No representative data available. |
| Boron | µg/L | annual | 0. | No representative data available. |
| Bromomethane | µg/L | annual | 0. | No representative data available. |
| Cadmium | µg/L | annual | 0. | STORET [C]; 38 values, 38<MDL, 2006-2011 |
| Chlorine, total res | µg/L | annual | 0. | No representative data available. |
| Chromium, tot. | µg/L | annual | 1. | STORET [C]; 12 values, 11<MDL, 2006-2011 |
| Chromium$^{+6}$, diss | µg/L | annual | 0. | No representative data available. |
| Chloroform | µg/L | annual | 0. | No representative data available. |
| Cobalt | µg/L | annual | 0. | No representative data available. |
| Copper | µg/L | annual | 5. | STORET [C]; 38 values, 30<MDL, 2006-2011 |
| Cyanide free | µg/L | annual | 0. | No representative data available |
| Fluoride | µg/L | annual | 0. | No representative data available. |
| Iron | µg/L | annual | 719. | STORET [C]; 38 values, 0<MDL, 2006-2011 |
| Lead | µg/L | annual | 1. | STORET [C]; 38 values, 35<MDL, 2006-2011 |
| Molybdenum | µg/L | annual | 0. | No representative data available. |
| Naphthalene | µg/L | annual | 0. | No representative data available. |
| Nickel | µg/L | annual | 2.75 | STORET [C]; 12 values, 0<MDL, 2006-2011 |
| Nitrate+Nitrate | mg/L | annual | 0.61 | STORET [C]; 38 values, 0<MDL, 2006-2011 |
| Phenol | µg/L | annual | 0. | No representative data available. |
| Selenium | µg/L | annual | 0. | STORET [C]; 38 values, 38<MDL, 2006-2011 |
| Silver | µg/L | annual | 0. | No representative data available. |
| Strontium | µg/L | annual | 127. | STORET [C]; 38 values, 0<MDL, 2006-2011 |
| TDS | mg/L | annual | 252. | STORET [C]; 38 values, 0<MDL, 2006-2011 |
| Thallium | µg/L | annual | 0. | No representative data available. |
| Tin | µg/L | annual | 0. | No representative data available. |
| Zinc | µg/L | annual | 5 | STORET [C]; 38 values, 33<MDL, 2006-2011 |

[C] STORET station # 602280 Mahoning River @ Leavittsburg - Leavitt Rd. RM 45.51

Table 14. Summary of Effluent Limits to Maintain Applicable Water Quality Criteria

| Parameter | Units | Average Human Health | Average Agri Supply | Average Aquatic Life | Maximum Aquatic Life | Inside Mixing Zone Maximum |
|---|---|---|---|---|---|---|
| **Outfall 001** | | | | | | |
| Chlorine, tot. res.[B] | µg/L | -- | -- | 11. | 19. | 38. |
| Iron | µg/L | -- | 7512. | 1525.[E] | -- | -- |
| **Outfall 002** | | | | | | |
| Ammonia – S | mg/L | -- | -- | 16. | -- | -- |
| Ammonia – W | mg/L | -- | -- | -- | -- | -- |
| Barium | µg/L | -- | -- | 340. | 3180. | 4000. |
| Beryllium | µg/L | 18400.[A] | 6572.[A] | 714. | 6031.[A] | 960. |
| Boron | µg/L | -- | -- | 89230.[A] | 748800.[A] | 65000. |
| Cadmium | µg/L | -- | -- | 3.3[E] | 29.[A] | 29. |
| Chlorine, tot. res. | µg/L | -- | -- | 15. | 26. | 38. |
| Cobalt | µg/L | -- | -- | 713.[A] | 6317.[A] | 440. |
| Copper | µg/L | -- | -- | 73.[A D] | 73.[A D] | 73. |
| Fluoride | µg/L | -- | 22750. | -- | -- | -- |
| Iron | µg/L | -- | 10960. | 2085.[E] | -- | -- |
| Lead | µg/L | -- | -- | 40.[D E] | 900.[A D] | 900. |
| Mercury[C] | ng/L | 12. | 10000.[A] | 910. | 1700. | 3400. |

[A] Allocation must not exceed the Inside Mixing Zone Maximum.
[B] Parameter would not require a WLA based on reasonable potential procedures, but allocation requested by permits group.
[C] Bioaccumulative Chemical of Concern (BCC); no mixing zone allowed after 11/15/2010, criteria must be met at end-of-pipe unless the requirements for an exception are met as listed in 3745-2-08.
[D] WLA based on applicable dissolved metal translator.
[E] Limit to meet Pennsylvania water quality criteria.

Table 14. Summary of Effluent Limits to Maintain Applicable Water Quality Criteria (continued).

| Parameter | Units | Average Human Health | Average Agri Supply | Average Aquatic Life | Maximum Aquatic Life | Inside Mixing Zone Maximum |
|---|---|---|---|---|---|---|
| **Outfall 002 (cont.)** | | | | | | |
| Nickel | µg/L | -- | -- | 518. | 2200. [A] | 2200. |
| Selenium | µg/L | 52220. | 237. | 11. [E] | -- | -- |
| Silver | µg/L | -- | -- | 3.0 | 19. [D] | 44. [D] |
| Thallium | µg/L | 414. [A] | -- | 506. [A] | 2269. [A] | 160. |
| Total Dissolved Solids [B] | mg/L | -- | -- | 1951. | -- | -- |
| Total Dissolved Solids [B] | mg/L | -- | -- | 622. [E] | -- | -- |
| Zinc | µg/L | -- | -- | 570. [A] | 570. [A] | 570. |
| **Outfall 008** | | | | | | |
| Ammonia – S | mg/L | -- | -- | 16. | -- | -- |
| Ammonia – W | mg/L | -- | -- | -- | -- | -- |
| Chlorine, tot. res. | µg/L | -- | -- | 15. | 26. | 38. |
| Total Dissolved Solids [B] | mg/L | -- | -- | 1951. | -- | -- |
| Total Dissolved Solids [B] | mg/L | -- | -- | 622. [E] | -- | -- |

[A] Allocation must not exceed the Inside Mixing Zone Maximum.
[B] Parameter would not require a WLA based on reasonable potential procedures, but allocation requested by permits group.
[D] WLA based on applicable dissolved metal translator.
[E] Limit to meet Pennsylvania water quality criteria.

Table 14. Summary of Effluent Limits to Maintain Applicable Water Quality Criteria (continued).

| Parameter | Units | Average Human Health | Average Agri Supply | Average Aquatic Life | Maximum Aquatic Life | Inside Mixing Zone Maximum |
|---|---|---|---|---|---|---|
| **Outfall 009** | | | | | | |
| Barium | µg/L | -- | -- | 340. | 3180. | 4000. |
| Chlorine, tot. res. | µg/L | -- | -- | 15. | 26. | 38. |
| Chromium, tot. | µg/L | -- | -- | 572. | 5500.[A] | 5500. |
| Copper | µg/L | -- | -- | 45.[A D] | 45.[A D] | 45. |
| Fluoride | µg/L | -- | 22750. | -- | -- | -- |
| Iron | µg/L | -- | 10960. | 2085.[E] | -- | -- |
| Lead | µg/L | -- | -- | 21.[D, E] | 470.[A D] | 470. |
| Mercury[C] | ng/L | 12. | 10000.[A] | 910. | 1700. | 3400. |
| Nickel | µg/L | -- | -- | 330. | 1400.[A] | 1400. |
| Total Dissolved Solids[B] | mg/L | -- | -- | 1951. | -- | -- |
| Total Dissolved Solids[B] | mg/L | -- | -- | 622.[E] | -- | -- |
| Zinc | µg/L | -- | -- | 370.[A] | 370.[A] | 370. |

[A] Allocation must not exceed the Inside Mixing Zone Maximum.
[B] Parameter would not require a WLA based on reasonable potential procedures, but allocation requested by permits group.
[C] Bioaccumulative Chemical of Concern (BCC); no mixing zone allowed after 11/15/2010, criteria must be met at end-of-pipe unless the requirements for an exception are met as listed in 3745-2-08.
[D] WLA based on applicable dissolved metal translator.
[E] Limit to meet Pennsylvania water quality criteria.

Table 15. Parameter Assessment for outfall 001/041

Group 1: Due to a lack of criteria, the following parameters could not be evaluated at this time.

Aluminum Manganese Phosphorus
Total Suspended Solids

Group 2: PEQ < 25% of WQS or all data below minimum detection limit; WLA not required. No limit recommended, monitoring optional.

Chlorine, tot. res.

Group 3: $PEQ_{max}$ < 50% of maximum PEL and $PEQ_{avg}$ < 50% of average PEL. No limit recommended, monitoring optional.

Ammonia

Group 4: $PEQ_{max} \geq$ 50% but <100% of the maximum PEL or $PEQ_{avg} \geq$ 50% but < 100% of the average PEL. Monitoring is appropriate.

No parameters meet the criteria of this group.

Group 5: Maximum PEQ $\geq$ 100% of the maximum PEL or average PEQ $\geq$ 100% of the average PEL,or either the average or maximum PEQ is between 75 and 100% of the PEL and certain conditions that increase the risk to the environment are present. Limit recommended.

Limits to Protect Numeric Water Quality Criteria

| Parameter | Units | Applicable Period | Recommended Effluent Limits Average | Maximum |
|---|---|---|---|---|
| Iron | µg/L | annual | 1525. [E] | -- |

[E] Limit to meet Pennsylvania water quality criteria.

Table 16. Parameter Assessment for outfall 002

Group 1: Due to a lack of criteria, the following parameters could not be evaluated at this time.

| | | |
|---|---|---|
| Aluminum | Magnesium | Manganese |
| Oxidants, tot. res. | Phosphorus | Sulfate |
| Titanium | | |

Group 2: PEQ < 25% of WQS or all data below minimum detection limit; WLA not required. No limit recommended, monitoring optional.

| | | |
|---|---|---|
| Antimony | Chromium, tot. | Molybdenum |
| Total Dissolved Solids | | |

Group 3: $PEQ_{max}$ < 50% of maximum PEL and $PEQ_{avg}$ < 50% of average PEL. No limit recommended, monitoring optional.

| | | |
|---|---|---|
| Ammonia – S | Ammonia – W | Beryllium |
| Boron | Cobalt | Fluoride |
| Lead | Nickel | Thallium |
| Zinc | | |

Group 4: $PEQ_{max} \geq$ 50% but <100% of the maximum PEL or $PEQ_{avg} \geq$ 50% but < 100% of the average PEL. Monitoring is appropriate.

| | | |
|---|---|---|
| Barium | Copper (>75%) | Selenium |

Group 5: Maximum PEQ $\geq$ 100% of the maximum PEL or average PEQ $\geq$ 100% of the average PEL,or either the average or maximum PEQ is between 75 and 100% of the PEL and certain conditions that increase the risk to the environment are present. Limit recommended.

Limits to Protect Numeric Water Quality Criteria

| Parameter | Units | Applicable Period | Recommended Effluent Limits Average | Maximum |
|---|---|---|---|---|
| Cadmium | µg/L | annual | 3.3 [E] | 29. |
| Chlorine, tot. res. | µg/L | annual | 15. | 26. |
| Iron | µg/L | annual | 2085. [E] | -- |
| Mercury | ng/L | annual | 12. | 1700. |
| Silver | µg/L | annual | 3.0 | 19. |

[E] Limit to meet Pennsylvania water quality criteria.

Table 17. Parameter Assessment for outfall 008

Group 1: Due to a lack of criteria, the following parameters could not be evaluated at this time.

No parameters meet the criteria of this group.

Group 2: PEQ < 25% of WQS or all data below minimum detection limit; WLA not required. No limit recommended, monitoring optional.

Total Dissolved Solids

Group 3: $PEQ_{max}$ < 50% of maximum PEL and $PEQ_{avg}$ < 50% of average PEL. No limit recommended, monitoring optional.

Ammonia – S Ammonia - W

Group 4: $PEQ_{max} \geq$ 50% but <100% of the maximum PEL or $PEQ_{avg} \geq$ 50% but < 100% of the average PEL. Monitoring is appropriate.

No parameters meet the criteria of this group.

Group 5: Maximum PEQ $\geq$ 100% of the maximum PEL or average PEQ $\geq$ 100% of the average PEL,or either the average or maximum PEQ is between 75 and 100% of the PEL and certain conditions that increase the risk to the environment are present. Limit recommended.

Limits to Protect Numeric Water Quality Criteria

| Parameter | Units | Applicable Period | Recommended Effluent Limits Average | Recommended Effluent Limits Maximum |
|---|---|---|---|---|
| Chlorine, tot. res. | µg/L | summer only | 15. | 26. |

Table 18. Parameter Assessment for outfall 009

Group 1: Due to a lack of criteria, the following parameters could not be evaluated at this time.

| | | |
|---|---|---|
| Aluminum | Magnesium | Manganese |
| Phosphorus | Sulfate | Titanium |

Group 2: PEQ < 25% of WQS or all data below minimum detection limit; WLA not required. No limit recommended, monitoring optional.

| | | |
|---|---|---|
| Boron | Molybdenum | Total Dissolved Solids |

Group 3: $PEQ_{max}$ < 50% of maximum PEL and $PEQ_{avg}$ < 50% of average PEL. No limit recommended, monitoring optional.

| | | |
|---|---|---|
| Chromium, tot. | Fluoride | Nickel |

Group 4: $PEQ_{max} \geq$ 50% but <100% of the maximum PEL or $PEQ_{avg} \geq$ 50% but < 100% of the average PEL. Monitoring is appropriate.

| | |
|---|---|
| Barium | Zinc |

Group 5: Maximum PEQ $\geq$ 100% of the maximum PEL or average PEQ $\geq$ 100% of the average PEL,or either the average or maximum PEQ is between 75 and 100% of the PEL and certain conditions that increase the risk to the environment are present. Limit recommended.

Limits to Protect Numeric Water Quality Criteria

| Parameter | Units | Applicable Period | Recommended Effluent Limits Average | Recommended Effluent Limits Maximum |
|---|---|---|---|---|
| Chlorine, tot. res. | µg/L | summer only | 15. | 26. |
| Copper | µg/L | annual | 45. | 45. |
| Iron | µg/L | annual | 2085. [E] | -- |
| Lead | µg/L | annual | 21. [E] | 470. |
| Mercury | ng/L | annual | 12. | 1700. |

[E] Limit to meet Pennsylvania water quality criteria.

Table 19. Final effluent limits and monitoring requirements for NRG outfall 3IB00007001/ 3IB00007041, station 3IB00007901 and the basis for their recommendation.

| | | Effluent Limits | | | | |
|---|---|---|---|---|---|---|
| | | Concentration | | Loading (kg/day)[a] | | |
| Parameter | Units | 30 Day Average | Daily Maximum | 30 Day Average | Daily Maximum | Basis[b] |
| *Outfall 001* | | | | | | |
| Flow | MGD | - - - - - - - - - - - - | Monitor | - - - - - - - - - - - - - - - | | M[c] |
| Temperature | °F | - - - - - - - - - - - - | Monitor | - - - - - - - - - - - - - - - | | M[c] |
| pH | S.U. | - - - - - - - - - - - - | 6.5 to 9.0 | - - - - - - - - - - - - - - | | WQS |
| Chlorine Residual | mg/l | -- | 0.2 | -- | -- | WLA/IMZM/BPJ |
| Oxidants Residual | mg/l | -- | 0.05 | -- | -- | WLA/IMZM/BPJ |
| Chlorine/Bromine Duration | min. | -- | 120 | -- | -- | WLA/IMZM/BPJ |
| Ammonia-N | mg/l | - - - - - - - - - - - - | Monitor | - - - - - - - - - - - - - - - | | M[c] |
| Phosphorus | mg/l | - - - - - - - - - - - - | Monitor | - - - - - - - - - - - - - - - | | M[c] |
| Copper, T.R. | ug/l | - - - - - - - - - - - - | Monitor | - - - - - - - - - - - - - - - | | M[c] |
| Iron, T.R. | ug/l | - - - - - - - - - - - - | Monitor | - - - - - - - - - - - - - - - | | M/RP[c] |
| Bis(2-ethylhexyl) phthalate | µg/l | - - - - - - - - - - - - | Monitor | - - - - - - - - - - - - - - - | | M[c] |
| *Outfall 041* | | | | | | |
| Flow | MGD | - - - - - - - - - - - - | Monitor | - - - - - - - - - - - - - - - | | M[c] |
| Temperature | °F | - - - - - - - - - - - - | Monitor | - - - - - - - - - - - - - - - | | M[c] |
| pH | S.U. | - - - - - - - - - - - - | 6.5 to 9.0 | - - - - - - - - - - - - - - | | WQS |
| Chlorine Residual | mg/l | 0.015 | 0.026 | -- | -- | WLA |
| Oxidants Residual | mg/l | -- | 0.01 | -- | -- | WLA/BPJ |
| Chlorine/Bromine Duration | min. | - - - - - - - - - - - - | Monitor | - - - - - - - - - - - - - - - | | M[c] |
| Ammonia-N | mg/l | - - - - - - - - - - - - | Monitor | - - - - - - - - - - - - - - - | | M[c] |
| Phosphorus | mg/l | - - - - - - - - - - - - | Monitor | - - - - - - - - - - - - - - - | | M[c] |
| Copper, T.R. | ug/l | - - - - - - - - - - - - | Monitor | - - - - - - - - - - - - - - - | | M[c] |
| Iron, T.R. | ug/l | - - - - - - - - - - - - | Monitor | - - - - - - - - - - - - - - - | | M/RP[c] |
| Bis(2-ethylhexyl) phthalate | µg/l | - - - - - - - - - - - - | Monitor | - - - - - - - - - - - - - - - | | M[c] |
| *Station 901* | | | | | | |
| Temperature (sum.) | °F | ** | 92 | -- | -- | 316(a) demo |

** - No more than 12 single-day temperature values shall be in excess of 89.0 °F from June 15 through September 15; no more than 20 seven-day moving average temperature values shall be in excess of 86.5 °F from June 15 to September 15.

Table 19. Con't.

[a] Effluent loadings based on average design discharge flow of N/A MGD.

[b] Definitions: 316(a) demo. = Limits justified under Clean Water Act Section 316(a) demonstration; BPJ = Best Professional Judgment; EP = Existing Permit; M = Monitoring; RP = Reasonable Potential for requiring water quality-based effluent limits and monitoring requirements in NPDES permits (3745-33-07(A)); WLA = Wasteload Allocation procedures (OAC 3745-2); WLA/IMZM = Wasteload Allocation limited by Inside Mixing Zone Maximum; WQS = Ohio Water Quality Standards (OAC 3745-1).

[c] Monitoring of flow and other indicator parameters is specified to assist in the evaluation of effluent quality and treatment plant performance.

Table 20. Final effluent limits and monitoring requirements for NRG outfall 3IB00007002 and the basis for their recommendation.

| | | Effluent Limits | | | | |
|---|---|---|---|---|---|---|
| | | Concentration | | Loading (kg/day)[a] | | |
| Parameter | Units | 30 Day Average | Daily Maximum | 30 Day Average | Daily Maximum | Basis[b] |
| Flow | MGD | - - - - - - - - - - - - | Monitor | - - - - - - - - - - - - - - - | | M[c] |
| Temperature | °C | - - - - - - - - - - - - | Monitor | - - - - - - - - - - - - - - - | | M[c] |
| Dissolved Solids | mg/l | - - - - - - - - - - - - | Monitor | - - - - - - - - - - - - - - - | | M[c] |
| Suspended Solids | mg/l | 30 | 70 | 454 | 1060 | BPT/BPJ/AD |
| Oil and Grease | mg/l | 15 | 20 | 227 | 302 | BPT/BPJ/AD |
| pH | S.U. | - - - - - - - - - - - - | 6.5 to 9.0[d] | - - - - - - - - - - - - - - | | WQS |
| Oxidants Residual | mg/l | -- | 0.01 | -- | -- | WLA/IMZM/BPJ |
| Barium, T. R. | µg/l | - - - - - - - - - - - - | Monitor | - - - - - - - - - - - - - - - | | M/RP[c] |
| Cadmium, T. R. | µg/l | 3.3 | 29 | 0.056 | 0.44 | WLA/AD |
| Copper, T. R. | µg/l | - - - - - - - - - - - - | Monitor | - - - - - - - - - - - - - - - | | M/RP[c] |
| Iron, T. R. | µg/l | - - - - - - - - - - - - | Monitor | - - - - - - - - - - - - - - - | | M/RP[c] |
| Lead, T. R. | µg/l | - - - - - - - - - - - - | Monitor | - - - - - - - - - - - - - - - | | M[c] |
| Mercury, T. | ng/l | 25.2 | 1700 | 0.0004 | 0.03 | VAR, WLA/AD |
| Selenium, T. R. | µg/l | - - - - - - - - - - - - | Monitor | - - - - - - - - - - - - - - - | | M/RP[c] |
| Silver, T. R. | µg/l | 3.0 | 19 | 0.051 | 0.32 | WLA |
| Zinc, T. R. | µg/l | - - - - - - - - - - - - | Monitor | - - - - - - - - - - - - - - - | | M[c] |
| Bis(2-ethylhexyl) phthalate | µg/l | - - - - - - - - - - - - | Monitor | - - - - - - - - - - - - - - - | | M[c] |
| Whole Effluent Toxicity, Acute | TUa | - - - - - - - - | Monitor (w/o trigger) | - - - - - - - - - - | | WET |

[a] Effluent loadings for suspended solids, oil&grease, cadmium (max.) and mercury (max.) based on average discharge flow of 4.0 MGD. Effluent loadings for silver, cadmium (avg.) and mercury (avg.) based on average discharge flow of 4.47 MGD.

[b] Definitions: AD = Antidegradation (OAC 3745-1-05); BPJ = Best Professional Judgment; BPT = Best Practicable Waste Treatment Technology, 40 CFR Part 423, Steam Electric Generating Effluent Guidelines; M = Monitoring; RP = Reasonable Potential for requiring water quality-based effluent limits and monitoring requirements in NPDES permits (3745-33-07(A)); VAR = variance under OAC 3745-33-07(D)(10); WET = Whole Effluent Toxicity (OAC 3745-33-07(B)) ; WLA = Wasteload Allocation procedures (OAC 3745-2); WLA/IMZM = Wasteload Allocation limited by Inside Mixing Zone Maximum; WQS = Ohio Water Quality Standards (OAC 3745-1).

Table 20. Con't.

[c] Monitoring of flow and other indicator parameters is specified to assist in the evaluation of effluent quality and treatment plant performance.

[d] Excursions from this pH range are allowed pursuant to 40 CFR 401.17 and Ohio EPA's WLA.

Table 21. Final effluent limits and monitoring requirements for NRG outfall 3IB00007008 and the basis for their recommendation.

| | | Effluent Limits | | | | |
|---|---|---|---|---|---|---|
| | | Concentration | | Loading (kg/day)[a] | | |
| Parameter | Units | 30 Day Average | Daily Maximum | 30 Day Average | Daily Maximum | Basis[b] |
| Flow | gpd | - - - - - - - - - - - - | Monitor | - - - - - - - - - - - - - - - - | | M[c] |
| pH | S.U. | - - - - - - - - - - - - | 6.5 to 9.0 | - - - - - - - - - - - - - - - | | WQS |
| Dissolved Oxygen | mg/l | -- | 5.0 (min.) | -- | -- | WQS |
| $CBOD_5$ | mg/l | 25 | 40 | 0.095 | 0.15 | PD/EP |
| Suspended Solids | mg/l | 30 | 45 | 0.11 | 0.17 | PD/EP |
| Ammonia-N | mg/l | - - - - - - - - - - - - | Monitor | - - - - - - - - - - - - - - - - | | M[c] |
| E. coli | #/100ml | | | | | |
| Summer | | 126 | 284 | -- | -- | WQS |
| Chlorine Residual | mg/l | -- | 0.038 | -- | -- | WLA/IMZM |
| Turbidity, severity | units | - - - - - - - - - - - - | Monitor | - - - - - - - - - - - - - - - - | | M[c] |

[a] Effluent loadings based on average design discharge flow of 0.001 MGD.

[b] Definitions: EP = Existing Permit; M = Monitoring; PD = Plant Design Criteria; WLA = Wasteload Allocation procedures (OAC 3745-2); WLA/IMZM = Wasteload Allocation limited by Inside Mixing Zone Maximum; WQS = Ohio Water Quality Standards (OAC 3745-1).

[c] Monitoring of flow and other indicator parameters is specified to assist in the evaluation of effluent quality and treatment plant performance.

Table 22. Final effluent limits and monitoring requirements for NRG outfalls 3IB00007009 and 3IB00007605 and the basis for their recommendation.

| | | Effluent Limits | | | | |
|---|---|---|---|---|---|---|
| | | Concentration | | Loading (kg/day)[a] | | |
| Parameter | Units | 30 Day Average | Daily Maximum | 30 Day Average | Daily Maximum | Basis[b] |
| *Outfall 009* | | | | | | |
| Flow | MGD | - - - - - - - - - - - - | Monitor | - - - - - - - - - - - - - - - | | M[c] |
| *Outfall 605* | | | | | | |
| Flow | MGD | - - - - - - - - - - - - | Monitor | - - - - - - - - - - - - - - - | | M[c] |
| Dissolved Solids | mg/l | - - - - - - - - - - - - | Monitor | - - - - - - - - - - - - - - - | | M[c] |
| Suspended Solids | mg/l | 30 | 100 | 227 | 757 | BPT |
| Oil and Grease | mg/l | 15 | 20 | 114 | 151 | BPT |
| Chlorine Residual | mg/l | - - - - - - - - - - - - | Monitor | - - - - - - - - - - - - - - - | | M/RP[c] |
| Barium, T. R. | µg/l | - - - - - - - - - - - - | Monitor | - - - - - - - - - - - - - - - | | M/RP[c] |
| Copper, T. R. | µg/l | - - - - - - - - - - - - | Monitor | - - - - - - - - - - - - - - - | | M/RP[c] |
| Iron, T. R. | µg/l | - - - - - - - - - - - - | Monitor | - - - - - - - - - - - - - - - | | M/RP[c] |
| Lead, T. R. | µg/l | - - - - - - - - - - - - | Monitor | - - - - - - - - - - - - - - - | | M/RP[c] |
| Mercury, T. | ng/l | - - - - - - - - - - - - | Monitor | - - - - - - - - - - - - - - - | | M/RP[c] |
| Zinc, T.R. | µg/l | - - - - - - - - - - - - | Monitor | - - - - - - - - - - - - - - - | | M/RP[c] |

[a] Effluent loadings for outfall 605 based on average discharge flow of 2.0 MGD.

[b] Definitions: BPT = Best Practicable Waste Treatment Technology, 40 CFR Part 423, Steam Electric Power Generating Effluent Guidelines; M = Monitoring; RP = Reasonable Potential for requiring water quality-based effluent limits and monitoring requirements in NPDES permits (3745-33-07(A)).

[c] Monitoring of flow and other indicator parameters is specified to assist in the evaluation of effluent quality and treatment plant performance.

Table 23. Final effluent limits and monitoring requirements for NRG outfalls 3IB00007604 and 3IB00007606 and the basis for their recommendation.

| | | Effluent Limits | | | | |
|---|---|---|---|---|---|---|
| | | Concentration | | Loading (kg/day)[a] | | |
| | | 30 Day | Daily | 30 Day | Daily | |
| Parameter | Units | Average | Maximum | Average | Maximum | Basis[b] |
| *Outfall 604* | | | | | | |
| Flow | gpd | - - - - - - - - - - - - | Monitor | - - - - - - - - - - - - - - - - | | M[c] |
| Suspended Solids | mg/l | 30 | 100 | -- | -- | BPT |
| Oil and Grease | mg/l | 15 | 20 | -- | -- | BPT |
| *Outfall 606* | | | | | | |
| Flow | gpd | - - - - - - - - - - - - | Monitor | - - - - - - - - - - - - - - - - | | M[c] |
| $CBOD_5$ | mg/l | 25 | 40 | -- | -- | PD/EP |
| Suspended Solids | mg/l | 30 | 45 | -- | -- | PD/EP |
| Ammonia-N | mg/l | - - - - - - - - - - - - | Monitor | - - - - - - - - - - - - - - - - | | M[c] |
| *E. coli.* | #/100ml | | | | | |
| Summer | | - - - - - - - - - - - - | Monitor | - - - - - - - - - - - - - - - - | | M[c] |
| Fecal coliform | #/100ml | | | | | |
| Summer | | 1000 | 2000 | -- | -- | PD/EP |
| Turbidity, severity | units | - - - - - - - - - - - - | Monitor | - - - - - - - - - - - - - - - - | | M[c] |

[a] Effluent loadings based on average design discharge flow of N/A MGD.

[b] Definitions: BPT = Best Practicable Waste Treatment Technology, 40 CFR Part 423, Steam Electric Power Generating Effluent Guidelines; EP = Existing Permit; M = Monitoring; PD = Plant Design Criteria.

[c] Monitoring of flow and other indicator parameters is specified to assist in the evaluation of effluent quality and treatment plant performance.

Attachment A– River Segment Summary from Ohio Integrated Report

# Division of Surface Water Large River Assessment Unit Summary

## Overview Information

Click to view a glossary of terms

Waterbody: Mahoning River
Segment: Eagle Creek to Pennsylvania border
Length: 37.00 miles
Priority Points: 6
Monitoring Scheduled: 2013
TMDL Scheduled: 2016

## Aquatic Life Use Assessment

Reporting Category: 5x
Aquatic Life Uses: WWH
Sampling Years: 1997, 2002, 2003, 2006
Sites Monitored: 14
Total Miles Monitored: 16.00
Assessment Unit Score: 47.5
Miles in Full Attainment: 7.60 (47.50%)
Miles in Partial Attainment: 3.40 (21.30%)
Miles in Non Attainment: 5.00 (31.20%)

Most Recent Data:

| Year Assessed | Station Name | River Mile | Drainage Area | Aquatic Life Use | Attainment Status |
|---|---|---|---|---|---|
| 2006 | MAHONING R. AT WARREN @ 3RD ISLAND DST. SUMMIT ST. | 39.08 | 594.0 | WWH | Full |
| 2006 | MAHONING R. AT WARREN @ WEST MARKET ST. | 38.26 | 594.0 | WWH | Full |
| 2006 | MAHONING R. NEAR YOUNGSTOWN SHEET & TUBE, CAMPBELL | 17.00 | 1018.0 | WWH | Non |
| 2006 | MAHONING R. AT LTV STEEL CAMPBELL @ POLAND AVE. | 16.46 | 1022.0 | WWH | Non |

| | | | | | |
|---|---|---|---|---|---|
| 2006 | MAHONING R. DST. LTV 039, UPST. 041 | 16.10 | 1022.0 | WWH | Non |

Causes of Impairment:

- cause unknown
- chlorine
- direct habitat alterations
- metals
- nutrients
- oil and grease
- organic enrichment/DO
- priority organics
- thermal modifications

Sources of Impairment:

- combined sewer overflows
- contaminated sediments
- dam construction - development
- flow regulation/modification - development
- hazardous wastes
- major municipal point source
- minor industrial point source
- source unknown
- spills
- urban runoff/storm sewers (NPS)

Comments: The WWH aquatic life use for the Mahoning River mainstem was listed as impaired based on historical data in the 2006 Integrated Report. For the 2008 report, aquatic life data from several small surveys conducted between 1997 and 2006 were included to update the mainstem assessment. Mainstem coverage was somewhat limited in that only 16 of 37 mainstem miles were considered assessed based on these small surveys. Aquatic life use status of the remaining 21 miles remains unknown. Identified causes and sources based on the intensive survey conducted in 1994 were carried over to this Integrated Report.

## Recreation Use Assessment

Reporting Category: 3i
Assessment Unit Score: Not calculated

## Public Drinking Water Supply Assessment

Reporting Category: 0
Cause of Impairment: None
Nitrate Watch List: No
Pesticide Watch List: No

## Fish Tissue Assessment

Reporting Category: 5
Causes of Impairment: PCBs
PCB Concentration: 531 ppb

Attachment B– Ohio EPA Staff Review of Niles Plant Impingement and Entrainment Studies

## CWA 316(B) IMPINGEMENT AND ENTRAINMENT STUDY, DATA REPORT, ORION POWER MIDWEST, LP NILES GENERATING STATION (AECOM 2010)

In 2006, AECOM obtained 20 impingement and 14 entrainment samples at the NRG Energy Services Niles Generating Station. Results of the sampling are discussed in the referenced AECOM report dated November 2010. Ohio EPA's Northeast District Office received the report in September 2011. Ohio EPA has adopted a ten-year period for data use in the Integrated Report. We've observed that Ohio's stream water quality is dynamic and that older data has less relevance to present conditions, especially in watersheds with rapidly changing conditions either related to land use or water quality changes. This reality is especially germane to the Mahoning River. The span of time between 2006 data acquisition and these 2014 comments is sufficient to stipulate that any findings of the AECOM study are regarded as based on near historical data. Any presumption that current operation of the NRG facility would have an influence on the Mahoning River akin to that noted in 2006 is erroneous simply because the Mahoning River has become appreciably healthier in the last eight years. The attached Tables 1 and 2 provides attainment status of the Warmwater Habitat (WWH) aquatic life use and other supporting data collected by Ohio EPA at current and historical stations in the vicinity of the NRG plant. It clearly reflects much better communities of fish and macroinvertebrates in the most recent 2013 study. This is a consistent result observed during 2013 throughout the entire mainstem of the Mahoning River between Warren and the confluence of the Mahoning with the Beaver River in Pennsylvania.

AECOM recorded dead fish (?), bluegill (1), and gizzard shad (11) were impinged (Table 3.) and 12 species with 3 unknown species types were entrained (Table 7). Accurate discrimination between species of entrained fish and acknowledgement of some unknowns defines taxonomic competence. Correct species identification is mandatory to a biological study. Reporting some fish as unknown to the taxonomist would seem to cast some doubt on the asserted identification of any named classifications. Misidentification is simply unacceptable. The data management section 2.4 and quality assurance section 3.5 purport a protocol for error checking and claim no significant issues were detected. The report was silent regarding voucher specimens or taxonomic competence.

Of 12 species reported to be entrained, 25% (3) do not exist in the Mahoning River. By any convention, a 25% error is a serious flaw. The inference that sauger are reproducing in the Mahoning River is particularly troubling. These simple lithophils are obviously unusual among a list of fish which otherwise exhibit various forms of specialized spawning or parental care for their fry. Walleye are present in the Mahoning River, but ODNR routinely stocks these fish in watershed lakes. The most likely correct analog, yellow perch, have increased from incidental collection in the reach downstream from NRG in and prior to 2002 to an average of 8 individuals per sample in 2012 and 2013 (84 individuals in 10 samples). Applying an eight-fold increase to the number of sauger (presumably yellow perch) entrained by the Generating Station would be a further exercise in incredulity.

Without belaboring the point, neither white perch nor freshwater drum were or are present in the Mahoning River. Analogs for these species are less apparent. White bass were and are extremely rare in the Mahoning River. None have been documented in the NRG vicinity. Freshwater drum are unique. This misidentification is inexplicable.

These incorrect identifications invite speculation regarding the larval grass pickerel. The 2013 collection of a juvenile muskellunge downstream from NRG as well as a grass (now renamed redfin) pickerel could pose an unanticipated taxonomic quandary. Furthermore, northern pike are increasing substantially in Mosquito Creek, just upstream from this location. With more confidence in the accuracy of the name of the entrained larval pike-like fish, this identification would be informative.

Carp abundance in the Mahoning River basin has declined. Recognizing interspecies competition for limited suitable spawning areas, it would be interesting to know if replication of this study would reflect a smaller number of entrained fish or perhaps vary with potential fecundity. Either way, it is unlikely that present conditions are reflected in the 2006 study.

The routine dismissal of dead fish and subsequent adjustment of impingement totals is disturbing. In a predator dominated system such as the Mahoning River, weak fish are prey. The inference that dead fish are routine is unacceptable. While gizzard shad are frequently impinged where source water is plankton enriched, these weak swimming fish are uncommon in the NRG vicinity (8 individuals were collected in 10 samples, 2012-2013). Any dead fish in a future study should be accounted for in impingement tabulations.

Large variation in dissolved oxygen (D.O.) availability was a co-occurrence with temperature spikes and exceedances of Ohio Water Quality Standards (WQS) criteria in 1994. This impact took place when the facility was operating at reduced capacity. River conditions noted in section 3.2 reported D.O. availability ranged from 1.0 mg/l to 16.2 mg/l during 2006 sampling events. These extreme values are consistent with thermal influence.

Mahoning River flow conditions are substantially controlled by the US Army Corps of Engineers (USACE). Appreciably more fish were collected in 2006 when lower flow conditions occurred. Any future study should target flow conditions and the timing of specific species spawning and recruitment. Annual totals of impingement and entrainment should be calculated with respect to seasonality, flow and the peaking operation of the facility. Essentially, profitable operation coincides with air conditioner use, natural low flow, and the peak of reproduction for many fish species. A healthy Mahoning River provides more fish at risk of being trapped by the facility intake.

In the methods section of the study, it is indicated that under high flow conditions (when impingement is the highest) that subsampling procedures may have been used. However, it is not clear in the results section whether or not this actually occurred. Clarification is needed to know if this was employed and how it was handled in the results.

According to the methods section, when subsampling during high flow, they would sample for a significantly less period of time than would normally be sampled (4 -5 minute subsamples over a 6-hour period vs. continuous sampling over a 6-hour period). Additionally, only one rotating screen was sampled rather than all three screens. The assumption was that the same rate of impingement would occur at all screens. Only sampling one screen could underestimate impingement rates and numbers.

Also, according to Table 1 of the study, it appears that several samples were collected when no actual steam generating units were in operation. Reduction of sampling when impingement would be high could also underestimate the actual number of fish entrained and impinged.

Further scrutiny of the 2006 report is unnecessary. If NRG is directed to revisit this investigation, Ohio EPA's Ecological Assessment Section would appreciate the opportunity to review the future study proposal and be present to observe sampling procedures. Replication of this evaluation using the same sampling and assessment procedures as employed in 2006 would likely underrepresent the actual impact of the existing facility operation on Mahoning River fish populations.

Table 1 Attainment status of the warmwater habitat aquatic life use for the Mahoning River adjacent to Niles and Girard, upstream from the Liberty St. dam (RM 26.38), 1980-2013. The number of fish species is comprehensive of all sampling passes at a site. The number of macroinvertebrate taxa is comprehensive of both qualitative and quantitative sampling at the site. Table 2 lists pertinent biocriteria. Note the significant improvement in fish community scores, IBI and MIwb, over time.

| RM (fish/ bug) | IBI/ MIwb | ICI | Status | QHEI | Fish Species | Macro. Taxa | Location |
|---|---|---|---|---|---|---|---|
| **Mahoning River** | | | | | | | |
| | | | | 2013 | | | |
| 29.2/30.0 | 35*/ 7.0* | 32$^{ns}$ | Partial | 54.5 | 20 | 67 | Near idle NRG |
| 28.7 | 28*/ 7.6* | 10* | NON | 55.5 | 18 | 33 | Dst. Niles WWTP |
| | | | | 2012 | | | |
| 28.7 | 36$^{ns}$/ 7.3* | 14* | Partial | 57.5 | 17 | 44 | Dst. Niles WWTP |
| 28.1 | 36$^{ns}$/ 6.5* | 4* | NON | 46.5 | 13 | 30 | Adj. McDonald |
| 26.8 | 37$^{ns}$/ 7.2* | 10* | NON | 48.0 | 20 | 37 | Dst. McDonald |
| | | | | 2002 | | | |
| 26.6 | 38$^{ns}$/ 7.5* | - | (Partial) | 44.0 | 12 | - | Dst. McDonald |
| | | | | 1994 | | | |
| 30.6 | 27*/ 5.4* | 8* | NON | 63.5 | 21 | 28 | Ust. Tributaries |
| 30.0 | 25*/ 6.0* | 10* | NON | 56.0 | 19 | 32 | Ust. NRG |
| 29.1 | 22*/ 4.4* | 6* | NON | 48.0 | 13 | 27 | Dst. NRG |
| 28.7 | 21*/ 4.9* | 6* | NON | 42.5 | 14 | 24 | Dst. Niles WWTP |
| | | | | 1986 | | | |
| 30.0 | 16*/ 4.0* | | (NON) | - | 5 | - | Ust. NRG |
| | | | | 1983 | | | |
| 30.8 | 12*/ 4.5* | - | (NON) | - | 8 | - | Ust. Tributaries |
| 30.0 | 21*/ 4.0* | - | (NON) | - | 12 | - | Ust. NRG |
| | | | | 1980 | | | |
| 30.0 | 18*/ 4.3* | - | (NON) | - | 14 | - | Ust. NRG |
| 28.5 | 13*/ 1.5* | - | (NON) | 51.0 | 4 | - | Dst. Niles WWTP |
| 27.3 | 13*/ 2.6* | - | (NON) | 54.5 | 6 | - | Dst. McDonald |

***** Significant departure from ecoregion biocriterion; poor and very poor results are underlined.

**ns** Nonsignificant departure from biocriterion (≤4 IBI or ICI units; ≤0.5 MIwb units).

**(Status)** Use attainment status based on one organism group is parenthetically expressed.

Table 2 Biocriteria and narrative ranges for the Erie Ontario Lake Plain ecoregion. For **WWH (in bold)** the ranges of marginally good and nonsignificant departure are the same. Exceptional (EWH biocriteria), very good (EWH nonsignificant departure), poor and very poor evaluations are common statewide.

| Boat IBI | Boat MIwb | ICI | Narrative Evaluation |
|---|---|---|---|
| 48-60 | ≥9.6 | 46-60 | Exceptional |
| 44-47 | 9.1-9.5 | 42-44 | Very Good |
| **40**-43 | **8.7**-9.0 | **34**-40 | Good |
| 36-39 | 8.2-8.6 | 30-32 | Marginally Good |
| 26-35 | 6.4-8.1 | 14-28 | Fair |
| 16-25 | 5.0-6.3 | 8-12 | Poor |
| 12-15 | 0-4.9 | ≤6 | Very Poor |

## REFERENCES


AECOM. 2010. *CWA 316(B) Impingement and Entrainment Study, Data Report, Orion Power Midwest, LP, Niles Generating Station*. Unpublished report prepared for RRI Energy.

OEPA. 2012. *Biological and Water Quality Study of the Mahoning River, Former US Steel McDonald Facility.* Ohio EPA Technical Report EAS/2012-11-11. Columbus, OH. Ohio Division of Surface Water.

OEPA. 1994. *Biological and Water Quality Study of the Mahoning River.* Ohio EPA Technical Report MAS/1995-12-14. Columbus, OH. Ohio Division of Surface Water.

OEPA. 1984 (1986 revision). *Lower Mahoning River Basin, Water Quality Technical Support Document.* Ohio EPA Technical Report Doc. 0503S/5318S. Columbus, OH. Ohio Division of Surface Water. (f.k.a. Ohio Division of Water Quality Monitoring and Assessment).