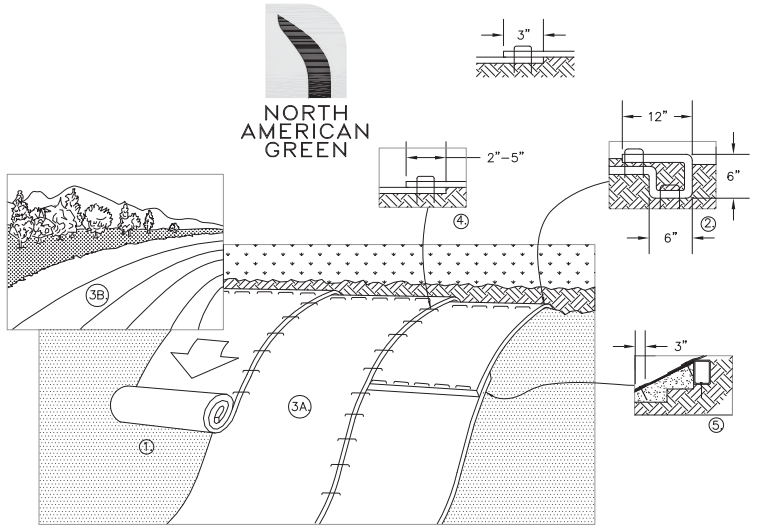


NOTE: REFER TO STAPLE PATTERN GUIDE, STAPLE PATTERN D, FOR STAPLE PATTERN DETAIL.

14649 HIGHWAY 41 NORTH, EVANSVILLE, INDIANA 47725
USA 1–800–772–2040 CANADA 1–800–448–2040
www.nagreen.com

## SLOPE INSTALLATION

NO SCALE

SLOPE INSTALLATION NOTES:

1. PREPARE SOIL BEFORE INSTALLING BLANKETS, INCLUDING ANY NECESSARY APPLICATION OF LIME, FERTILIZER, AND SEED. NOTE: WHEN USING CELL–O–SEED DO NOT SEED PREPARED AREA. CELL–O–SEED MUST BE INSTALLED WITH PAPER SIDE DOWN.
2. BEGIN AT THE TOP OF THE SLOPE BY ANCHORING THE BLANKET IN A 6" DEEP X 6" WIDE TRENCH WITH APPROXIMATELY 12" OF BLANKET EXTENDED BEYOND THE UP–SLOPE PORTION OF THE TRENCH. ANCHOR THE BLANKET WITH A ROW OF STAPLES/STAKES APPROXIMATELY 12" APART IN THE BOTTOM OF THE TRENCH. BACK FILL AND COMPACT THE TRENCH AFTER STAPLING. APPLY SEED TO COMPACTED SOIL AND FOLD REMAINING 12" PORTION OF BLANKET BACK OVER SEED AND COMPACTED SOIL. SECURE BLANKET OVER COMPACTED SOIL WITH A ROW OF STAPLES/STAKES SPACED APPROXIMATELY 12" APART ACROSS THE WIDTH OF THE BLANKET.
3. ROLL THE BLANKETS (A.) DOWN OR (B.) HORIZONTALLY ACROSS THE SLOPE. BLANKETS WILL UNROLL WITH APPROPRIATE SIDE AGAINST THE SOIL SURFACE. ALL BLANKETS MUST BE SECURELY FASTENED TO SOIL SURFACE BY PLACING STAPLES/STAKES IN APPROPRIATE LOCATIONS AS SHOWN IN THE STAPLE PATTERN GUIDE ON THIS SHEET. WHEN USING OPTIONAL DOT SYSTEM , STAPLES/STAKES SHOULD BE PLACED THROUGH EACH OF THE COLORED DOTS CORRESPONDING TO THE APPROPRIATE STAPLE PATTERN.
4. THE EDGES OF PARALLEL BLANKETS MUST BE STAPLED WITH APPROXIMATELY 2"–5" OVERLAP DEPENDING ON BLANKET TYPE. TO ENSURE PROPER SEAM ALIGNMENT, PLACE THE EDGE OF THE OVERLAPPING BLANKET (BLANKET BEING INSTALLED ON TOP) EVEN WITH THE COLORED SEAM STITCH ON THE PREVIOUSLY INSTALLED BLANKET.
5. CONSECUTIVE BLANKETS SPLICED DOWN THE SLOPE MUST BE PLACED END OVER END (SHINGLE STYLE) WITH AN APPROXIMATE 3" OVERLAP. STAPLE THROUGH OVERLAPPED AREA, APPROXIMATELY 12" APART ACROSS ENTIRE BLANKET WIDTH.

NOTE: *IN LOOSE SOIL CONDITIONS, THE USE OF STAPLE OR STAKE LENGTHS GREATER THAN 6" MAY BE NECESSARY TO PROPERLY SECURE THE BLANKETS.

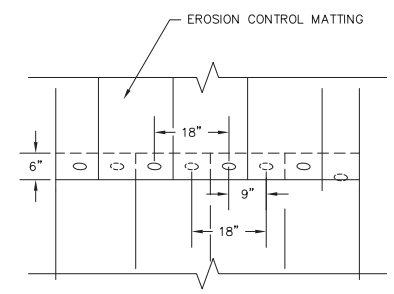


## STAPLE PATTERN DETAIL AT LONGITUDINAL SEAMS

NO SCALE

NOTES:

1. LONGITUDINAL SEAMS SHALL BE ANCHORED AT 18–INCH INTERVAL, AS SHOWN ABOVE.
2. ANCHORS SHALL BE 8" – 11 GAUGE WIRE 'U' STAPLES.

NORTH AMERICAN GREEN

EROSION CONTROL *Products Guaranteed* SOLUTIONS

14649 HIGHWAY 41 NORTH
EVANSVILLE, IN 47725
800–772–2040
www.nagreen.com

## STAPLE PATTERN GUIDE 6.67' (2.03 M) WIDE ROLLS

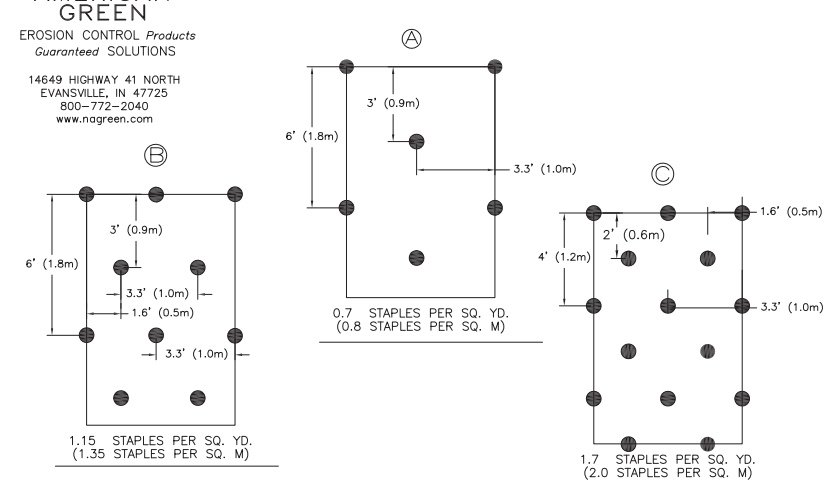


## CHANNEL INSTALLATION

NORTH AMERICAN GREEN

EROSION CONTROL *Products Guaranteed* SOLUTIONS

14649 HIGHWAY 41 NORTH
EVANSVILLE, IN 47725
800–772–2040
www.nagreen.com

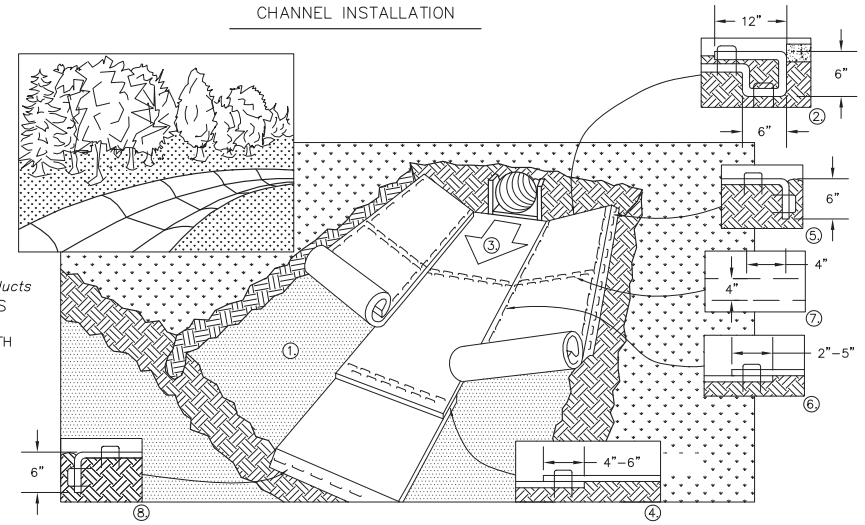


1. PREPARE SOIL BEFORE INSTALLING ROLLED EROSION CONTROL PRODUCTS (RECP's), INCLUDING ANY NECESSARY APPLICATION OF LIME, FERTILIZER, AND SEED. NOTE: WHEN USING CELL–O–SEED DO NOT SEED PREPARED AREA. CELL–O–SEED MUST BE INSTALLED WITH PAPER SIDE DOWN.
2. BEGIN AT THE TOP OF THE CHANNEL BY ANCHORING THE RECP's IN A 6" (15 CM) DEEP X 6" (15 CM) WIDE TRENCH WITH APPROXIMATELY 12" (30 CM) OF RECP's EXTENDED BEYOND THE UP–SLOPE PORTION OF THE TRENCH. ANCHOR THE RECP's WITH A ROW OF STAPLES/STAKES APPROXIMATELY 12" (30 CM) APART IN THE BOTTOM OF THE TRENCH. BACKFILL AND COMPACT THE TRENCH AFTER STAPLING. APPLY SEED TO COMPACTED SOIL AND FOLD REMAINING 12" (30 CM) PORTION OF RECP's BACK OVER SEED AND COMPACTED SOIL. SECURE RECP's OVER COMPACTED SOIL WITH A ROW OF STAPLES/STAKES SPACED APPROXIMATELY 12" (30 CM) ACROSS THE WIDTH OF THE RECP's.
3. ROLL CENTER RECP's IN DIRECTION OF WATER FLOW IN BOTTOM OF CHANNEL. RECP's WILL UNROLL WITH APPROPRIATE SIDE AGAINST THE SOIL SURFACE. ALL RECP's MUST BE SECURELY FASTENED TO SOIL SURFACE BY PLACING STAPLES/STAKES IN APPROPRIATE LOCATIONS AS SHOWN IN THE STAPLE PATTERN GUIDE. WHEN USING THE DOT SYSTEM, STAPLES/STAKES SHOULD BE PLACED THROUGH EACH OF THE COLORED DOTS CORRESPONDING TO THE APPROPRIATE STAPLE PATTERN.
4. PLACE CONSECUTIVE RECP's END OVER END (SHINGLE STYLE) WITH A 4" – 6" (10 CM –15 CM) OVERLAP. USE A DOUBLE ROW OF STAPLES STAGGERED 4" (10 CM) APART AND 4" (10 CM) ON CENTER TO SECURE RECP's.
5. FULL LENGTH EDGE OF RECP's AT TOP OF SIDE SLOPES MUST BE ANCHORED WITH A ROW OF STAPLES/STAKES APPROXIMATELY 12" (30 CM) APART IN A 6" (15 CM) DEEP X 6" (15 CM) WIDE TRENCH. BACKFILL AND COMPACT THE TRENCH AFTER STAPLING.
6. ADJACENT RECP's MUST BE OVERLAPPED APPROXIMATELY 2" – 5" (5 CM –12.5 CM) (DEPENDING ON RECP's TYPE) AND STAPLED.
7. IN HIGH FLOW CHANNEL APPLICATIONS, A STAPLE CHECK SLOT IS RECOMMENDED AT 30 TO 40 FOOT (9 M – 12 M) INTERVALS. USE A DOUBLE ROW OF STAPLES STAGGERED 4" (10 CM) APART AND 4" (10 CM) ON CENTER OVER ENTIRE WIDTH OF THE CHANNEL.
8. THE TERMINAL END OF THE RECP's MUST BE ANCHORED WITH A ROW OF STAPLES/STAKES APPROXIMATELY 12" (30 CM) APART IN A 6" (15 CM) DEEP X 6" (15 CM) WIDE TRENCH. BACKFILL AND COMPACT THE TRENCH AFTER STAPLING.

NOTE:
* IN LOOSE SOIL CONDITIONS, THE USE OF STAPLE OR STAKE LENGTHS GREATER THAN 6" (15 CM) MAY BE NECESSARY TO PROPERLY ANCHOR THE RECP's.

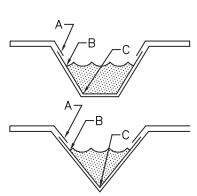


CRITICAL POINTS

A. OVERLAPS AND SEAMS
B. PROJECTED WATER LINE
C. CHANNEL BOTTOM/SIDE SLOPE VERTICES

NOTE:
* HORIZONTAL STAPLE SPACING SHOULD BE ALTERED IF NECESSARY TO ALLOW STAPLES TO SECURE THE CRITICAL POINTS ALONG THE CHANNEL SURFACE.

** IN LOOSE SOIL CONDITIONS, THE USE OF STAPLE OR STAKE LENGTHS GREATER THAN 6" (15 cm) MAY BE NECESSARY TO PROPERLY ANCHOR THE RECP's.

NOTE: REFER TO STAPLE PATTERN GUIDE, STAPLE PATTERN E, FOR STAPLE PATTERN DETAIL.

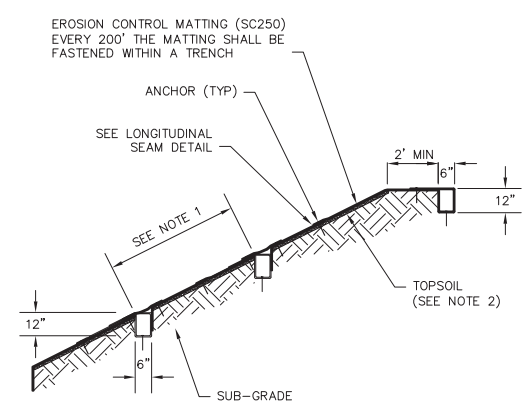


## STEEP SLOPE STABILIZATION DETAIL

NO SCALE

NOTES:

1. TRENCH ANCHOR AT BEGINNING AND END OF MATTING ROLLS. OTHERWISE INSTALL TRENCH ANCHORS WITH A MAXIMUM SPACING OF 200'.
2. THE EMBANKMENT SHALL BE DOZER TRACKED AND PERMANENTLY SEEDED PRIOR TO EROSION CONTROL MATTING INSTALLATION.

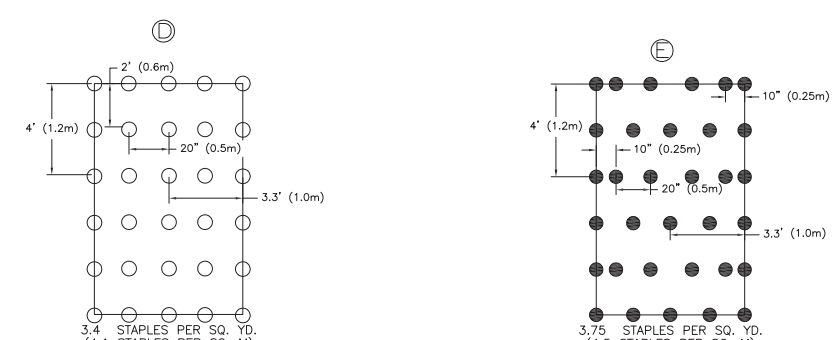


| REV. | DATE | APP# | DESCRIPTION | APPROVAL |
|---|---|---|---|---|

| ENGINEERING RECORD | |
|---|---|
| DRAWN BY | RFT |
| CHECKED BY | CDA |
| APPROVED BY | BJB |
| DATE | XYZ |
| SCALE | AS NOTED |

STV

Douglassville, PA Houston, TX Baltimore, MD Williamsport, PA

THE LOCATION OF THE PIPELINE FACILITIES AS SHOWN HEREON MUST BE CONSIDERED AS APPROXIMATE ONLY. BEFORE DIGGING OR FOR AN EXACT LOCATION PLEASE CONTACT YOUR STATES UNDERGROUND UTILITY LOCATION SERVICE.

INLAND CORPORATION

12-INCH TIFFIN JCT TO EASTON JCT
ALLEGHENY ACCESS PIPELINE PROJECT
EROSION AND SEDIMENTATION
CONTROL DETAILS

SENECA, HURON, ASHLAND AND WAYNE COUNTIES, OHIO

OLD DRAWING NO.

DWG. NO. 38-15486-TE-809

REV. NO. 0

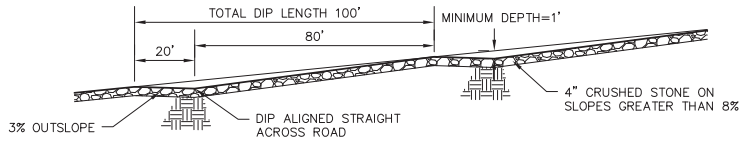


NOTES:

1. BROAD-BASED DIPS SHALL BE USED TO DIRECT RUNOFF FROM ACTIVE ROADWAYS TO WELL-VEGETATED AREAS OR SEDIMENT REMOVAL BMPS SUCH AS SILT SOXX, SEDIMENT BASINS, OR SILT SOXX SEDIMENT TRAPS.
2. DIPS SHALL BE ORIENTED SO AS TO DISCHARGE TO THE LOW SIDE OF THE ROADWAY.
3. DIPS SHALL BE INSPECTED DAILY. DAMAGED OR NON-FUNCTIONING DIPS SHALL BE REPAIRED BY THE END OF THE WORKDAY.
4. SPACING OF BROAD-BASED DIPS SHOULD BE AS SHOWN IN TABLE 3.2.

HIGH GRADIENT (5% – 10%) ROADWAY

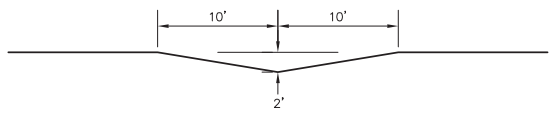


PROFILE

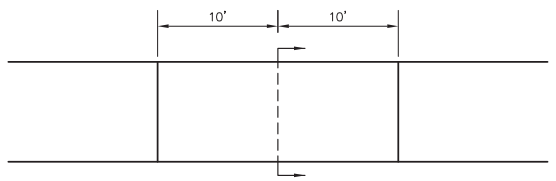


PLAN

NOTES:

1. BROAD-BASED DIPS SHALL BE USED TO DIRECT RUNOFF FROM ACTIVE ROADWAYS TO WELL-VEGETATED AREAS OR SEDIMENT REMOVAL BMPS SUCH AS SILT SOXX, SEDIMENT BASINS, OR SILT SOXX SEDIMENT TRAPS.
2. DIPS SHALL BE ORIENTED SO AS TO DISCHARGE TO THE LOW SIDE OF THE ROADWAY.
3. DIPS SHALL BE INSPECTED DAILY. DAMAGED OR NON-FUNCTIONING DIPS SHALL BE REPAIRED BY THE END OF THE WORKDAY.

LOW GRADIENT (<5%) ROADWAY

## BROAD-BASED DIP DETAIL

NO SCALE

| TABLE 3.2 – SPACING OF BROAD-BASED DIPS | |
|---|---|
| ROAD GRADE (PERCENT) | SPACING BETWEEN DIPS (FEET) |
| <2 | 300 |
| 3 | 235 |
| 4 | 200 |
| 5 | 180 |
| 6 | 165 |
| 7 | 155 |
| 8 | 150 |
| 9 | 145 |
| 10 | 140 |

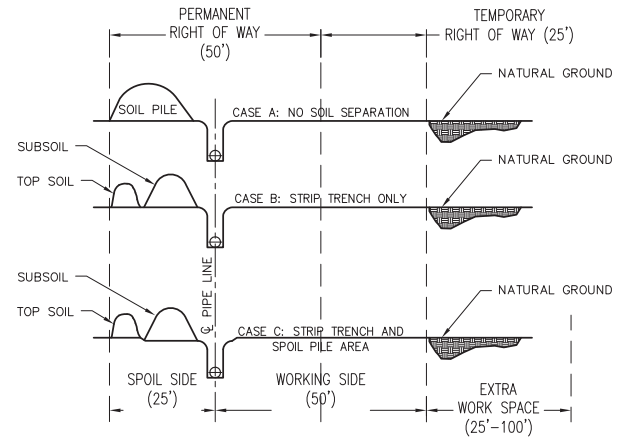


NOTE:
STRIPPING UNDER THIS SOIL PILE MAY ALSO BE REQUIRED IN CROPLANDS.

NOTE:
THE RIGHT-OF-WAY SPOIL PILE SHOWN ABOVE IS ONLY REQUIRED WHERE THE EXISTING GRADE IS TOO IRREGULAR TO LAY PIPE.

- CASE A APPLIES TO WOODLANDS AND BRUSHLANDS.
- CASE B SHOULD BE USED IN PERMANENT HAYLAND, PASTURE AND WETLAND.
- CASE C SHOULD BE USED IN NON ACTIVE CROPLANDS WITH DRY STABLE SOILS.

## TOPSOIL SEGREGATION

NO SCALE

WHERE THE R/W CROSSES AGRICULTURAL SLOPES AND CONSTRUCTION CUTS AND/OR FILLS WILL OCCUR, STOCKPILE ALL TOPSOIL ON UPSLOPE EDGE OF R/W TO PREVENT BURYING AND MIXING OF TOPSOIL. IF TOPSOIL MUST BE STOCKPILED ON THE DOWNSLOPE SIDE, PLAN EXTRA WORK SPACE TO ENSURE COMPLETE SEPARATION OF TOPSOIL AND SUBSOIL STOCKPILES.

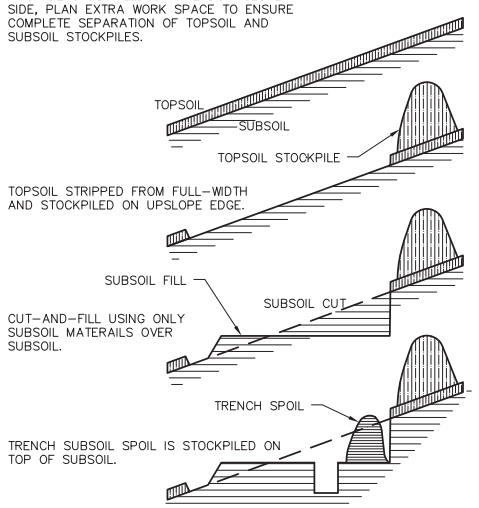


NOTES:

1. SUBSOIL IS REGRADED TO CONTOUR AFTER PIPE INSTALLATION.
2. TOPSOIL IS REPLACED OVER THE R/W AFTER THE SUBSOIL IS DECOMPOSED AND ROCKS/STONES ARE REMOVED.
3. BEDROCK AND BOULDER SPOIL SHALL BE TEMPORARILY PILED IN ACCESS LANES FOR IMMEDIATE REMOVAL

## TOPSOIL STOCKPILING ON SLOPES

NO SCALE

STV
Douglassville, PA Houston, TX Baltimore, MD Williamsport, PA

THE LOCATION OF THE PIPELINE FACILITIES AS SHOWN HEREON MUST BE CONSIDERED AS APPROXIMATE ONLY. BEFORE DIGGING OR FOR AN EXACT LOCATION PLEASE CONTACT YOUR STATES UNDERGROUND UTILITY LOCATION SERVICE.

| ENGINEERING RECORD | |
|---|---|
| DRAWN BY | RFT |
| CHECKED BY | CDA |
| APPROVED BY | BJB |
| DATE | XYZ |
| SCALE | AS NOTED |

| REV. | DATE | APP# | DESCRIPTION | APPROVAL |
|---|---|---|---|---|

INLAND CORPORATION

12-INCH TIFFIN JCT TO EASTON JCT
ALLEGHENY ACCESS PIPELINE PROJECT
EROSION AND SEDIMENTATION CONTROL DETAILS

SENECA, HURON, ASHLAND AND WAYNE COUNTIES, OHIO

OLD DRAWING NO.

DWG. NO. 38-15486-TE-810

REV. NO. 0

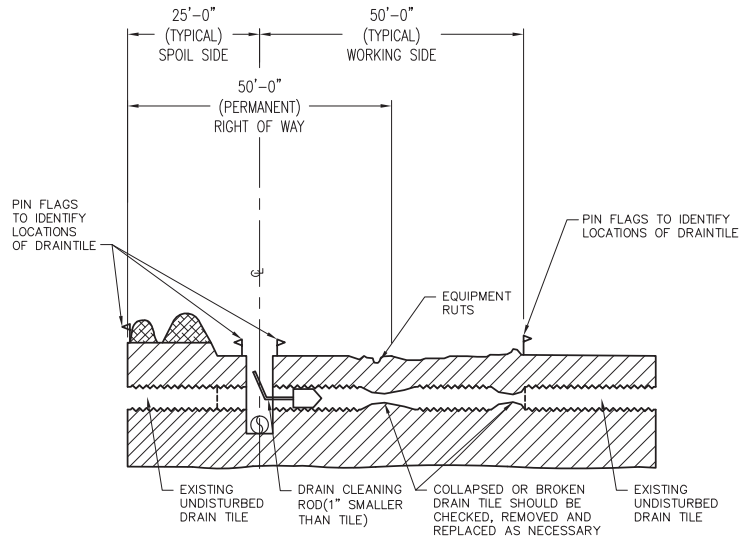


NOTES:

1. CLEAN OUT DRAIN TILES TO THE PERMANENT RIGHT-OF-WAY LIMITS ON THE BACKFILL SIDE AND TO THE TEMPORARY RIGHT-OF-WAY LIMIT ON THE WORKING SIDE.
2. REPLACE DAMAGED TILES AND REPAIR TILES AND JOINTS THAT REQUIRE WORK AND ARE WITHIN THE ARES OF CONSTRUCTION ACTIVITIES.

## DRAIN TILE INSPECTION

NO SCALE

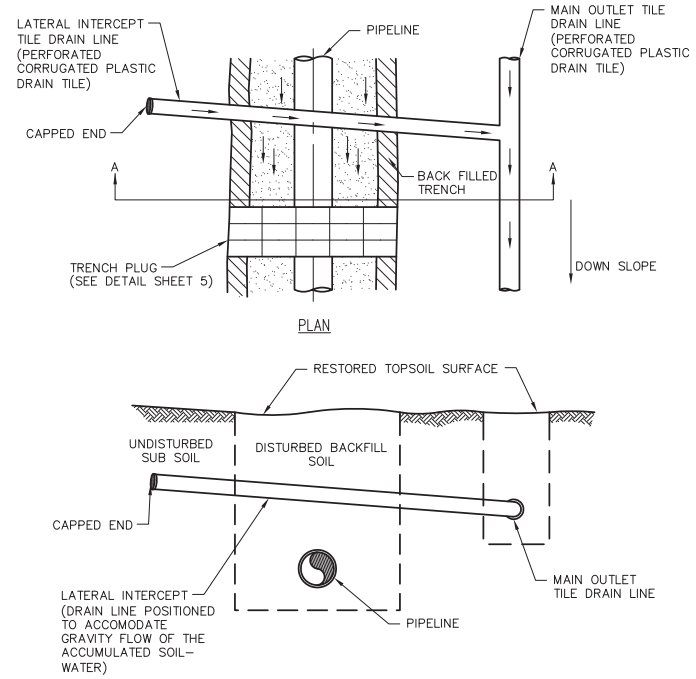


NOTES:

1. TRENCH PLUGS SHALL PREVENT GULLY EROSION WHILE TRENCH IS OPEN AND HELP INHIBIT WATER PIPING WATER PIPING AND WATER BLOWOUTS DOWN THE COURSE OF THE PIPELINE AFTER BACKFILLING.
2. AGRICULTURAL CROPLAND MAY REQUIRE CROSS TRENCH DRAINAGE OR PARALLEL DRAINAGE.

## INTERCEPT DRAIN TILE CROSS TRENCH DRAINAGE

NO SCALE

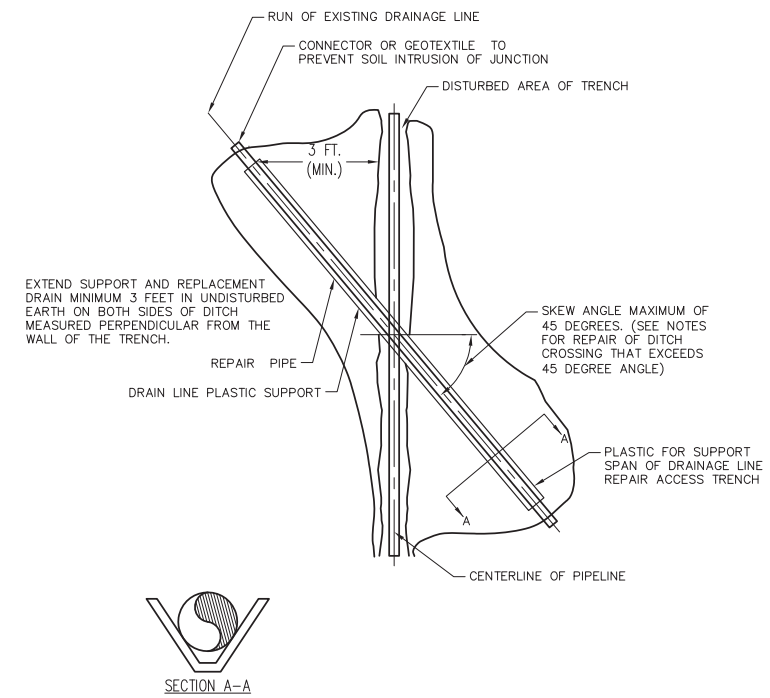


NOTES:

1. PROVIDE A PLASTIC SUPPORT FOR DRAIN TILE OR PLASTIC PIPE TO MAINTAIN FUNCTION WHILE DITCH IS OPEN.
2. SHOULD A DRAIN TILE CROSS A DITCH AT A SKEW OF GREATER THAN 45 DEGREES, THE REPLACEMENT DRAIN IS TO BE RELOCATED INTO UNDISTURBED SOIL OR OUT OF CONFLICT WITH THE PIPELINE DITCH REPLACEMENT DRAIN LINE IS TO BE INSTALLED TO MATCH ELEVATION OF EXISTING DRAIN TILES.

## REPAIR OF SEVERED DRAIN TILE PLAN

NO SCALE

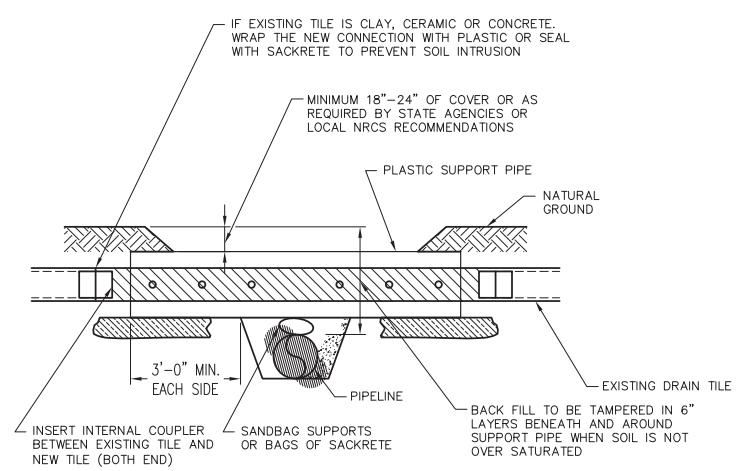


| TUBING/PIPE SIZES | |
|---|---|
| TUBING SIZE | PIPE SIZE |
| 4" | 4" |
| 6" | 6" |
| 8" | 10" |
| 10" | 10" |
| 12" | 12" |
| 18" | 18" |

NOTES:

1. ALL PIPE TO BE MINIMUM SCHEDULE 80.
2. PLASTIC DRAIN TUBING AND CORRUGATED PIPE TO BE INSTALLED SO THE HOLES ARE CENTERED ON EACH SIDE OF THE BOTTOM OF THE PIPE.
3. ALL MATERIAL TO BE CONTRACTOR SUPPLIED.
4. THE PERFORMED RIGID SUPPORT PIPE IS SHOULDERED BACK INTO THE FIRM UNDISTURBED SOIL PROFILE TO ENSURE CONSISTENT GRAVITY FLOW GRADIENT OF THE TILE LINE ACROSS THE TRENCH AS THE BACKFILL MATERIAL GRADUALLY SETTLES FOR UP TO TWO LAYERS.

## REPAIR OF SEVERED TILE DRAIN DETAIL

NO SCALE

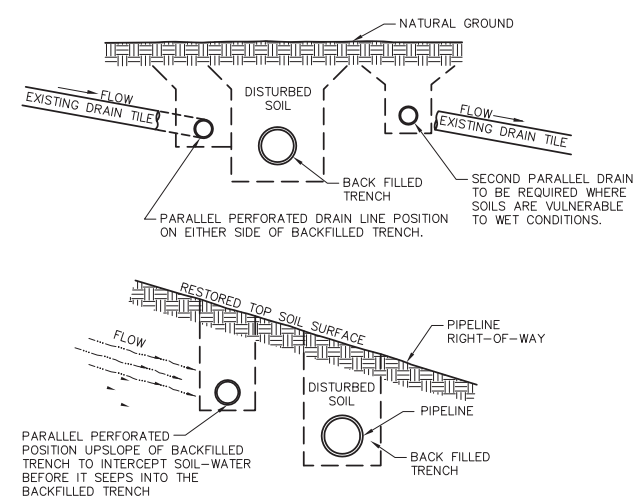


NOTES:

1. PARALLEL DRAINAGE TILE INSTALLATION TO BE APPROVED FOR SITE SPECIFIC AGRICULTURAL SOILS WHERE REPAIR OF EXISTING CROSS TILES WOULD BE LESS EFFECTIVE FOR EXAMPLE:
   a. SHALLOW BEDROCK.
   b. INTERFERENCE BY OTHER UTILITY LINES.
   c. TO HEADER CLOSELY SPACED SHALLOW TILES AND FRENCH DRAINS.

## INTERCEPT DRAIN TILE PARALLEL TO TRENCH

NO SCALE

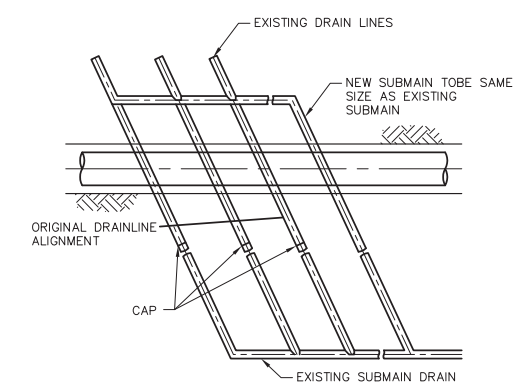


NOTE:

1. TO BE DETERMINED BY AGRICULTURAL SPECIALIST BASE ON SLOPE & DRAINAGE AREA IN CONSULTATION WITH SWCD.

PLAN

## TILE SYSTEM WITH NEW SUBMAIN

NO SCALE

STV
Douglassville, PA Houston, TX Baltimore, MD Williamsport, PA

THE LOCATION OF THE PIPELINE FACILITIES AS SHOWN HEREON MUST BE CONSIDERED AS APPROXIMATE ONLY. BEFORE DIGGING OR FOR AN EXACT LOCATION PLEASE CONTACT YOUR STATES UNDERGROUND UTILITY LOCATION SERVICE.

| ENGINEERING RECORD | |
|---|---|
| DRAWN BY | RFT |
| CHECKED BY | CDA |
| APPROVED BY | BJB |
| DATE | XYZ |
| SCALE | AS NOTED |
| | |
| | |

OLD DRAWING NO.

| REV. | DATE | APP# | DESCRIPTION | APPROVAL |
|---|---|---|---|---|

INLAND CORPORATION

12-INCH TIFFIN JCT TO EASTON JCT
ALLEGHENY ACCESS PIPELINE PROJECT
EROSION AND SEDIMENTATION CONTROL DETAILS

SENECA, HURON, ASHLAND AND WAYNE COUNTIES, OHIO

DWG. NO. 38-15486-TE-811

REV. NO. 0

## DISPOSAL AND HANDLING OF HAZARDOUS AND OTHER CONSTRUCTION WASTE

DO:

- PREVENT SPILLS
- USE PRODUCTS UP
- FOLLOW LABEL DIRECTIONS FOR DISPOSAL
- REMOVE LIDS FROM EMPTY BOTTLES AND CANS WHEN DISPOSING IN TRASH
- RECYCLE WASTES WHENEVER POSSIBLE

DON'T:

- DON'T POUR INTO WATERWAYS, STORM DRAINS OR ONTO THE GROUND
- DON'T POUR DOWN SINK, FLOOR DRAIN OR SEPTIC TANKS
- DON'T BURY CHEMICALS OR CONTAINERS
- DON'T BURN CHEMICALS OR CONTAINERS
- DON'T MIX CHEMICALS TOGETHER

1. CONSTRUCTION PERSONNEL, INCLUDING SUBCONTRACTORS WHO MAY USE OR HANDLE HAZARDOUS OR TOXIC MATERIALS, SHALL BE MADE AWARE OF THE FOLLOWING GUIDELINES. (LIST ABOVE).
2. CONTAINERS SHALL BE PROVIDED FOR COLLECTION OF ALL WASTE MATERIAL INCLUDING CONSTRUCTION DEBRIS, TRASH, PETROLEUM PRODUCTS AND ANY HAZARDOUS MATERIALS TO BE USED ON SITE. ALL WASTE MATERIAL SHALL BE DISPOSED OF AT FACILITIES APPROVED FOR THAT MATERIAL.
3. NO WASTE MATERIALS SHALL BE BURIED ON SITE. SITE PERSONNEL, INCLUDING SUBCONTRACTORS SHALL BE NOTIFIED THAT NO CONSTRUCTION-RELATED MATERIALS ARE TO BE BURIED ON-SITE.
4. MIXING, PUMPING, TRANSFERRING OR OTHERWISE HANDLING CONSTRUCTION CHEMICALS SUCH AS FERTILIZERS, LIME, ASPHALT, CONCRETE DRYING COMPOUNDS, AND ALL OTHER POTENTIALLY HAZARDOUS MATERIALS SHALL BE PERFORMED IN AN AREA AWAY FROM ANY WATERCOURSE, DITCH OR STORM DRAIN.
5. EQUIPMENT FUELING AND MAINTENANCE, OIL CHANGING, ETC., SHALL BE PERFORMED AWAY FROM WATERCOURSES, DITCHES OR STORM DRAINS, IN AN AREA DESIGNATED FOR THAT PURPOSE. THE DESIGNATED AREA SHALL BE EQUIPPED FOR RECYCLING OIL AND CATCHING SPILLS.
6. CONCRETE WASH WATER SHALL NOT BE ALLOWED TO FLOW TO STREAMS, DITCHES, STORM DRAINS, OR ANY OTHER WATER CONVEYANCE. A SUMP OR PIT SHALL BE CONSTRUCTED IF NEEDED TO CONTAIN CONCRETE WASH WATER.
7. IF HAZARDOUS SUBSTANCES SUCH AS OIL, DIESEL FUEL, HYDRAULIC FLUID, ANTIFREEZE, ETC. ARE SPILLED, LEAKED OR RELEASED ONTO SOIL, THE SOIL SHOULD BE DUG UP AND DISPOSED OF WITH THE TRASH AT A LICENSED SANITARY LANDFILL (NOT A CONSTRUCTION/DEMOLITION DEBRIS LANDFILL). SPILLS ON PAVEMENT SHALL BE ABSORBED WITH SAWDUST OR KITTY LITER AND DISPOSED OF WITH THE TRASH AT A LICENSED SANITARY LANDFILL. HAZARDOUS OR INDUSTRIAL WASTES SUCH AS MOST SOLVENTS, GASOLINE, OIL-BASED PAINTS AND CEMENT CURING COMPOUNDS REQUIRE SPECIAL HANDLING. CONTACT OHIO EPA (1-800-282-9378).
8. SPILLS OF 25 gal. OR MORE OF PETROLEUM PRODUCTS SHALL BE REPORTED TO OHIO EPA (1-800-282-9378), THE LOCAL FIRE DEPARTMENT AND THE LOCAL EMERGENCY PLANNING COMMITTEE WITHIN 30 MINUTES OF THE DISCOVERY OF THE RELEASE.
9. HAZARDOUS OR POLLUTIVE MATERIAL STORAGE AREAS SHALL BE LOCATED AT LEAST 100 FEET BACK FROM THE TOP OF STREAM.

## CONSTRUCTION NOTES

A. DESIGN INFORMATION

1. CODES AND STANDARDS

a. ALL CONSTRUCTION SHALL CONFORM TO SUNOCO PIPELINE L.P. ENGINEERING STANDARDS.

B. EXCAVATION AND BACKFILL

1. EXCAVATION

a. LOCATION OF EXISTING UNDERGROUND UTILITIES SHALL BE VERIFIED PRIOR TO EXCAVATION. CONTRACTOR SHALL AVOID DISTURBING FILL MATERIAL AROUND EXISTING UNDERGROUND UTILITIES DURING EXCAVATION OF NEW TRENCH.

b. EXCAVATION SHALL BE PERFORMED IN ACCORDANCE WITH ALL APPLICABLE CODES AND STANDARDS.

c. SUPPORT EXCAVATIONS WITH SHEETING, SHORING, AND BRACING OR A TRENCH BOX AS REQUIRED TO COMPLY WITH FEDERAL AND STATE LAWS AND LOCAL GOVERNING CODES.

d. TRENCHES SHALL BE DEWATERED WHERE REQUIRED. THE CONTRACTOR SHALL AT ALL TIMES PROVIDE AND MAINTAIN PROPER AND SATISFACTORY MEANS AND DEVICES FOR THE REMOVAL OF ALL WATER ENTERING THE EXCAVATIONS, AND SHALL REMOVE ALL SUCH WATER IN ACCORDANCE WITH THE DESILTING BAG DETAIL. DEWATERING SHALL NOT INTERFERE WITH THE EXECUTION OF THE WORK, OR THE PROPER PLACING OF PIPES, OTHER WORK, OR TRAFFIC FLOW ON THE ROADWAY.

e. SEE OWNER SPECIFICATIONS FOR ADDITIONAL INFORMATION.

f. REMOVE ALL EXCESS WASTE MATERIAL AND DISPOSE OFF SITE. THERE WILL BE NO BURNING OR BURYING OF WASTE AT THE PROJECT AREA.

2. BACKFILL

a. BACKFILLING SHALL BE PERFORMED IN ACCORDANCE WITH OWNER SPECIFICATIONS AND ALL APPLICABLE CODES AND STANDARDS.

C. GENERAL

1. ALL CONSTRUCTION SHALL BE IN ACCORDANCE WITH THE CITY OF CUYAHOGA FALLS ORDINANCES AND/OR REGULATIONS, OHIO DEPARTMENT OF NATURAL RESOURCES DIVISION OF SOIL AND WATER RESOURCES "RAINWATER AND LAND DEVELOPMENT" STANDARDS, AND SUNOCO PIPELINE L.P. SPECIFICATIONS.
2. CONTRACTOR SHALL VERIFY HORIZONTAL AND VERTICAL LOCATIONS OF ALL UNDERGROUND FACILITIES DURING THE COURSE OF WORK.
3. ALL DIMENSIONS AND CONDITIONS MUST BE CHECKED AND VERIFIED IN THE FIELD BEFORE STARTING WORK. ANY DISCREPANCY SHALL BE CALLED TO THE ATTENTION OF THE OWNER'S REPRESENTATIVE BEFORE PROCEEDING WITH THE WORK.
4. ANY EXISTING IMPROVEMENTS THAT ARE LOCATED WITHIN THE LIMITS OF WORK AND/OR INTERFERE WITH THE PROSECUTION OF THE WORK SHALL BE REMOVED AND REINSTALLED BY THE CONTRACTOR UNLESS OTHERWISE NOTED ON THE PLANS.
5. MAINTAIN ACCESS TO CONSTRUCTION ENTRANCES.
6. CONSTRUCTION ENTRANCES SHALL BE KEPT FREE OF EXCAVATED MATERIALS AT ALL TIMES.
7. ALL WORK SHALL BE PERFORMED IN ACCORDANCE WITH EROSION AND SEDIMENTATION CONTROL PLANS.
8. REFER TO OWNER'S SPECIFICATIONS FOR STREAM BYPASS REQUIREMENTS.

## SOIL EROSION AND SEDIMENTATION CONTROL PLAN

1. THE CONTRACTOR IS REQUIRED TO FULLY COMPLY WITH ALL OF THE RULES AND STANDARDS OF THE OHIO EPA AND SUMMIT SOIL & WATER CONSERVATION DISTRICT, INCLUDING THE CONSTRUCTION AND MAINTENANCE OF EROSION AND SEDIMENTATION CONTROLS AS SPECIFIED IN THE RAINWATER AND LAND DEVELOPMENT MANUAL (2007).
2. CONSTRUCTION OPERATIONS SHALL BE CARRIED OUT IN SUCH A MANNER THAT ALL EROSION, AIR AND WATER POLLUTION IS MINIMIZED. STATE AND LOCAL LAWS CONCERNING POLLUTION ABATEMENT SHALL BE FOLLOWED.
3. THE CONTRACTOR SHALL CONTACT THE APPROPRIATE SOIL & WATER CONSERVATION DISTRICT AT LEAST THREE WORKING DAYS PRIOR TO STARTING WORK. THE TELEPHONE NUMBERS FOR THE APPROPRIATE SOIL & WATER CONSERVATION DISTRICTS ARE LISTED IN THE SPECIFICATIONS. THE CONTRACTOR SHALL SECURE THE APPROVAL OF BOTH THE APPROPRIATE SOIL & WATER CONSERVATION DISTRICTS AND SUNOCO SITE REPRESENTATIVE PRIOR TO REMOVING ANY EROSION CONTROL DEVICE.
4. SHOULD ANY MEASURES CONTAINED WITHIN THIS PLAN PROVE INCAPABLE OF ADEQUATELY REMOVING SEDIMENT FROM ON-SITE FLOWS PRIOR TO DISCHARGE, OR INCAPABLE OF STABILIZING THE SURFACES INVOLVED, ADDITIONAL MEASURES SHALL BE IMMEDIATELY IMPLEMENTED BY THE PERMITTEE TO ELIMINATE ALL SUCH PROBLEMS.
5. THE EROSION AND SEDIMENT POLLUTION CONTROL PLANS, APPLICATION DOCUMENTS, NARRATIVE(S), ARE ALL INCLUDED HEREWITH BY REFERENCE AS AN INTEGRAL PART OF THIS CONTRACT. ANY QUESTIONS, COMMENTS, APPROVAL CONDITIONS OR PERMIT REQUIREMENTS CONTAINED WITHIN A REGULATORY REVIEW LETTER (OR THE ENGINEER'S RESPONSE TO A REGULATORY REVIEW LETTER) FOR THIS PROJECT ARE HEREBY INCLUDED AS AN INTEGRAL PART OF THIS CONTRACT, AND THE CONTRACTOR SHALL FULLY COMPLY WITH ANY APPROVAL CONDITIONS OR PERMIT REQUIREMENTS AS IF THEY WERE INCLUDED HEREWITH IN THEIR FULL TEXT. COPIES OF ALL STATE AND LOCAL REGULATORY AGENCY REVIEWS, COMMENTS, APPROVAL CONDITIONS OR PERMIT REQUIREMENTS MAY BE OBTAINED THROUGH SUNOCO LOGISTICS.
6. REFER TO SEQUENCE OF CONSTRUCTION ON SHEET 813.

### EROSION CONTROL MEASURES

#### TEMPORARY

1. TEMPORARY CONTROL MEASURES SHALL BE MAINTAINED UNTIL PERMANENT STABILIZATION OF UNIFORM 70% PERENNIAL VEGETATIVE COVER, OR BETTER, OF THE DISTURBED AREA HAS BEEN ACHIEVED.
2. SILT FENCE BARRIERS SHALL BE INSTALLED PRIOR TO ANY DISTURBANCE OF EXISTING GROUND COVER.
3. TEMPORARY FILTER BASINS OR FILTER BAGS, SHALL BE INSTALLED TO CONTROL SEDIMENT DISCHARGES FROM DEWATERING OR STREAM FLOW BY PASSING.
4. REMOVE AS LITTLE NATURAL VEGETATIVE COVER AS POSSIBLE TO ACHIEVE COMPLIANCE WITH THE DRAWINGS AND SPECIFICATIONS.
5. ADHERE TO THE CONSTRUCTION SEQUENCE AS CLOSELY AS POSSIBLE.
6. STOCKPILED MATERIAL SHALL BE STABILIZED FROM EROSION BY SEEDING AND MULCHING WITH TEMPORARY SEED MIX AT THE SPECIFIED RATES. IF SEASONAL CONDITIONS WILL NOT PERMIT SEEDING, THEN STOCK PILES WILL BE ENCLOSED WITH A SILT FENCE BARRIER.
7. ALL VEHICLES LEAVING WORKSITE MUST CLEAN TIRES BEFORE ENTERING ONTO A PUBLIC ROAD.

#### PERMANENT

1. ALL AREAS OF EARTH DISTURBED BY CONSTRUCTION WILL BE SEEDED AND MULCHED IMMEDIATELY AFTER COMPLETION OF CONSTRUCTION. IN EVENT THAT SEEDING CANNOT TAKE PLACE IMMEDIATELY DUE TO WEATHER CONDITIONS, MULCH OR HEAVY JUTE MATS WILL BE SPREAD OVER THE DISTURBED AREAS UNTIL SEEDING MAY BE PROPERLY COMPLETED.

## MAINTENANCE PROGRAM FOR SEDIMENT AND EROSION CONTROLS

1. THE CONTRACTOR IS RESPONSIBLE FOR MAINTAINING ALL EROSION CONTROL FACILITIES DURING CONSTRUCTION. ALL DAMAGED FACILITIES WILL BE REPAIRED WITHIN 24 HOURS. WHEN SILT HAS ACCUMULATED TO A DEPTH OF SIX INCHES AGAINST OR AROUND ANY CONTROL FACILITY THE SILT WILL BE REMOVED IMMEDIATELY BY THE CONTRACTOR AND RETURNED TO THE SITE.
2. THE CONTRACTOR WILL NOT REMOVE ANY CONTROL FACILITY UNTIL DIRECTED BY OWNER'S REPRESENTATIVE. MATERIALS USED FOR EROSION CONTROL WILL BE DISPOSED OF OFF SITE WHEN REMOVED. SUCH MATERIALS ARE CONSIDERED PROPERTY OF THE CONTRACTOR.
3. MAINTENANCE PROGRAM PROCEDURES WILL BE PERFORMED BY THE CONTRACTOR. EROSION AND SEDIMENTATION CONTROL DEVICES SHALL BE INSPECTED ON A WEEKLY BASIS, AND AFTER EVERY RUNOFF EVENT, UNTIL STABILIZED.

### CONSTRUCTION ENTRANCE

1. THE STRUCTURE'S THICKNESS WILL BE CONSTANTLY MAINTAINED TO THE SPECIFIED DIMENSIONS BY ADDING ROCK. A STOCKPILE OF ROCK MATERIALS WILL BE MAINTAINED ON THE SITE FOR THIS PURPOSE.
2. AT THE END OF EACH CONSTRUCTION DAY, ALL SEDIMENT DEPOSITED ON PUBLIC ROADWAYS WILL BE REMOVED BY USE OF A VACUUM TYPE ROAD SWEEPER AND RETURNED TO THE CONSTRUCTION SITE.

### DUST CONTROL

1. THE CONTRACTOR SHALL EMPLOY CONSTRUCTION METHODS AND MEANS THAT WILL KEEP FLYING DUST TO THE MINIMUM. HE SHALL PROVIDE FOR THE SPRAYING OF WATER ON THE PROJECT AREA. THE MATERIALS AND METHODS USED FOR WATER SPRAYING SHALL BE SUBJECT TO THE APPROVAL OF THE OWNER'S REPRESENTATIVE.
2. THE CONTRACTOR SHALL PROVIDE FOR PROMPT REMOVAL FROM EXISTING PAVING ALL DIRT AND OTHER MATERIALS THAT HAVE BEEN SPILLED, WASHED UPON, TRACKED UPON, OR OTHERWISE DEPOSITED THEREON BY HIS HAULING AND OTHER OPERATIONS WHENEVER THE ACCUMULATION IS SUFFICIENT TO CAUSE THE FORMATION OF DUST OR MUD, INTERFERE WITH DRAINAGE, DAMAGE PAVEMENTS OR CREATE A TRAFFIC HAZARD.
3. THE CONTRACTOR SHALL USE A VACUUM TYPE STREET SWEEPER TO REMOVE SUCH MATERIALS.

### FILTER FABRIC

1. THE FENCE INSTALLATION SHALL BE INSPECTED AFTER EVERY RUNOFF EVENT. ANY NECESSARY REPAIRS WILL BE MADE IMMEDIATELY.
2. ACCUMULATED SEDIMENT WILL BE REMOVED AS REQUIRED TO KEEP THE FENCE FUNCTIONAL. IN ALL CASES REMOVE DEPOSITS WHERE ACCUMULATIONS REACH A DEPTH OF SIX INCHES.
3. CHECK DAMS SHALL BE INSTALLED AT LOCATIONS OF NATURAL DRAINAGE AREAS OR AREAS OF EXCESSIVE RUN-OFF.
4. ALL UNDERCUTTING OR EROSION OF THE TOE ANCHOR WILL BE REPAIRED IMMEDIATELY WITH COMPACTED BACKFILL MATERIALS.
5. ADHERE TO MANUFACTURER'S RECOMMENDATION FOR REPLACING FILTER FABRIC FENCING DUE TO WEATHERING.
6. ALL SEDIMENT SHALL BE REMOVED IN AN APPROVED MANNER. SEDIMENT MAY BE PLACED WITH TOPSOIL ON TOP OF TRENCH AND SEEDED.

## SOIL INFORMATION

THE SOIL INFORMATION FOR THIS PROJECT WAS OBTAINED FROM THE U.S. DEPARTMENT OF AGRICULTURE, SOIL CONSERVATION SERVICE SOIL SURVEY FOR ALL COUNTIES.

FOR THE SOILS ENCOUNTERED ON THIS PROJECT, PLEASE SEE THE SHEETS FOLLOWING THIS SHEET.

### SOIL LIMITATIONS RESOLUTIONS

#### EROSION HAZARD (ROAD, TRAIL)

SOME OF THE TRAILS IN CERTAIN AREAS WITH SPECIFIC SOIL CONDITIONS MAY BE PRONE TO SOIL LOSS AND ACCELERATED EROSION. EROSION AND SEDIMENTATION CONTROL BMPS WILL BE IMPLEMENTED AND ANY ACCESS ROADS USED WILL BE MAINTAINED AS NECESSARY.

#### CORROSIVE SOIL

CORROSIVE SOILS MAY BE PRESENT WITHIN THE PROPOSED WORK AREA. A SOIL TEST TO DETERMINE THE RESISTIVITY SHOULD BE CONDUCTED PRIOR TO CONSTRUCTION. A CATHODIC PROTECTION SYSTEM WILL BE USED ON THE PIPELINE TO SLOW THE CORROSION PROCESS.

#### CUTBANKS CAVING

SOME CAVING IN OF STEEP EXCAVATION SIDE SLOPES IS ANTICIPATED DUE TO THE SOIL CONDITIONS WITHIN THE PROJECT AREA. TRENCH BOXES AND SLOPING-BACK OF THE TRENCH WALLS WILL BE PERFORMED AT THE DISCRETION OF THE CONTRACTOR IN ACCORDANCE WITH OSHA REGULATIONS.

#### DEPTH TO SATURATED ZONE

EXCAVATION SHALL BE DEWATERED AS NECESSARY USING DESILTING BAGS AS SHOWN ON THE DETAIL TO MINIMIZE EROSION AND SEDIMENTATION OUTSIDE THE PROJECT AREA. THE DOWN SLOPE SIDE OF THE DEWATERING SITES WILL BE PROTECTED WITH SILT SOCKS AND LOCATED AN AMPLE DISTANCE FROM DRAINAGE CHANNELS TO ALLOW FOR NATURAL FILTERING OF THE WATER BY THE EXISTING VEGETATION.

STV

Douglassville, PA Houston, TX Baltimore, MD Williamsport, PA

THE LOCATION OF THE PIPELINE FACILITIES AS SHOWN HEREON MUST BE CONSIDERED AS APPROXIMATE ONLY. BEFORE DIGGING OR FOR AN EXACT LOCATION PLEASE CONTACT YOUR STATES UNDERGROUND UTILITY LOCATION SERVICE.

| ENGINEERING RECORD | |
|---|---|
| DRAWN BY | RFT |
| CHECKED BY | CDA |
| APPROVED BY | BJB |
| DATE | XYZ |
| SCALE | AS NOTED |
| | |
| | |

OLD DRAWING NO.

| REV. | DATE | APP# | DESCRIPTION | APPROVAL |
|---|---|---|---|---|

INLAND CORPORATION

12-INCH TIFFIN JCT TO EASTON JCT
ALLEGHENY ACCESS PIPELINE PROJECT
EROSION AND SEDIMENTATION CONTROL NOTES

SENECA, HURON, ASHLAND AND WAYNE COUNTIES, OHIO

DWG. NO. 38-15486-TE-813

REV. NO. 0

| TEMPORARY SEEDING SPECIFICATION | | |
|---|---|---|
| SEEDING DATES | SPECIES | Lb./1,000 $Ft^2$ |
| MARCH 1 TO AUGUST 15 | OATS<br>TALL FESCUE<br>ANNUAL RYEGRASS | 3<br>1<br>1 |
| | PERENNIAL RYEGRASS<br>TALL FESCUE<br>ANNUAL RYEGRASS | 1<br>1<br>1 |
| AUGUST 16 TO NOVEMBER 1 | RYE<br>TALL FESCUE<br>ANNUAL RYEGRASS | 3<br>1<br>1 |
| | WHEAT<br>TALL FESCUE<br>ANNUAL RYEGRASS | 3<br>1<br>1 |
| | PERENNIAL RYEGRASS<br>TALL FESCUE<br>ANNUAL RYEGRASS | 1<br>1<br>1 |
| NOVEMBER 1 TO SPRING SEEDING | USE MULCH ONLY, SODDING PRACTICES OR DORMANT SEEDING. | |

1. STRUCTURAL EROSION AND SEDIMENT CONTROL PRACTICES SUCH AS DIVERSIONS AND SEDIMENT TRAPS SHALL BE INSTALLED AND STABILIZED WITH TEMPORARY SEEDING PRIOR TO GRADING THE REST OF THE CONSTRUCTION SITE.

2. TEMPORARY SEED SHALL BE APPLIED BETWEEN CONSTRUCTION OPERATIONS ON SOIL THAT WILL NOT BE GRADED OR REWORKED FOR 21 DAYS OR MORE. THESE IDLE AREAS SHOULD BE SEEDED AS SOON AS POSSIBLE AFTER GRADING OR SHALL BE SEEDED WITHIN 7 DAYS. SEVERAL APPLICATIONS OF TEMPORARY SEEDING ARE NECESSARY ON TYPICAL CONSTRUCTION PROJECTS.

3. THE SEEDBED SHOULD BE PULVERIZED AND LOOSE TO ENSURE THE SUCCESS OF ESTABLISHING VEGETATION. HOWEVER, TEMPORARY SEEDING SHALL NOT BE POSTPONED IF IDEAL SEEDBED PREPARATION IS NOT POSSIBLE.

4. SOIL AMENDMENTS – TEMPORARY VEGETATION SEEDING RATES SHALL ESTABLISH ADEQUATE STANDS OF VEGETATION WHICH MAY REQUIRE THE USE OF SOIL AMENDMENTS. SOIL TESTS SHOULD BE TAKEN ON THE SITE TO PREDICT THE NEED FOR LIME AND FERTILIZER.

5. SEEDING METHOD – SEED SHALL BE APPLIED UNIFORMLY WITH A CYCLONE SEEDER, DRILL, CULTIPACKER, OR HYDROSEEDER. WHEN FEASIBLE SEED THAT HAS BEEN BROADCAST SHALL BE COVERED BY RAKING OR DRAGGING AND THEN LIGHTLY TAMPED USING A ROLLER OR CULTIPACKER. IF HYDROSEEDING IS USED, THE SEED AND FERTILIZER WILL BE MIXED ON SITE AND THE SEEDING SHALL BE DONE IMMEDIATELY AND WITHOUT INTERRUPTION.

| PERMANENT SEEDING SPECIFICATION | | | |
|---|---|---|---|
| SEED MIX | SEEDING RATE Lb./Ac. | SEEDING RATE Lb./1,000 $Ft^2$ | NOTES |
| GENERAL USE | | | |
| CREEPING RED FESCUE<br>DOMESTIC RYEGRASS<br>KENTUCKY BLUEGRASS | 20–40<br>10–20<br>10–20 | 1<br>1/2<br>1/2 | |
| TALL FESCUE | 40 | 1 | |
| DWARF FESCUE | 40 | 1 | |
| STEEP BANKS OR CUT SLOPES (SEE NOTE BELOW)* | | | |
| TALL FESCUE | 40 | 1 | |
| CROWN VETCH<br>TALL FESCUE | 10<br>20 | 1/4<br>1/2 | DO NOT SEED LATER THAN AUG |
| FLAT PEA<br>TALL FESCUE | 20<br>20 | 1/2<br>1/2 | DO NOT SEED LATER THAN AUG |
| ROAD DITCHES AND SWALE | | | |
| TALL FESCUE | 40 | 1 | |
| DWARF FESCUE<br>KENTUCKY BLUEGRASS | 90<br>5 | 2 1/4 | |
| LAWNS | | | |
| KENTUCKY BLUEGRASS<br>PERENNIAL RYEGRASS | 60<br>60 | 1 1/2<br>1 1/2 | |
| KENTUCKY BLUEGRASS<br>CREEPING RED FESCUE | 60<br>60 | 1 1/2<br>1 1/2 | FOR SHADED AREAS |
| NORTH EASTERN OHIO MOIST MEADOW SEED MIX | | | |
| ANDROPOGON GERARDII – BIG BLUESTEM<br>ELYMUS CANADENSIS – NODDING WILD RYE<br>PANICUM VIRGATUM – SWITCH GRASS<br>SCIRPUS ATROVIRENS – DARK GREEN BULRUSH<br>SCIRPUS CYPERINUS – WOOLGRASS ASCLEPIAS INCARNATA – SWAMP MILKWEED<br>ASCLEPIAS SYRIACA – COMMON MILKWEED<br>ASTER NOVAE–ANGLIAE – NEW ENGLAND ASTER<br>ASTER UMBELLATUS – FLAT–TOPPED WHITE ASTER<br>DESMODIUM CANADENSE – SHOWY TICK TREFOIL<br>EUPATORIUM MACULATUM – SPOTTED JOE PYE<br>EUPATORIUM PERFOLIATUM – COMMON BONESET<br>HELIANTHUS GROSSESERRATUS – SAWTOOTH SUNFLOWER<br>LIATRIS SPICATA – DENSE BLAZINGSTAR<br>LOBELIA SIPHILITICA – GREAT LOBELIA<br>MONARDA FISTULOSA – WILD BERGAMOT<br>PENSTEMON DIGITALIS – FOXGLOVE BEARDTONGUE<br>PHYSOSTEGIA VIRGINIANA – OBEDIENT PLANT–PURPLE<br>PYCNANTHEMUM TENUIFOLIUM – NARROW LEAVED MOUNTAIN MINT<br>RATIBIDA PINNATA – GREY–HEADED CONEFLOWER<br>SILPHIUM TEREBINTHINACEUM – PRAIRIE DOCK<br>SOLIDAGO NEMORALIS – DWARF GOLDENROD<br>SOLIDAGO RIDDELLII – RIDDELL'S GOLDENROD<br>TRADESCANTIA OHIENSIS – OHIO SPIDERWORT<br>VERBENA HASTATA – BLUE VERVAIN | 10.5 | 1/3 – 1/2 | CAN BE PURCHASED FROM:<br>OHIO PRAIRIE NURSERY<br>P.O. BOX 174<br>HIRAM, OHIO 44234<br>PHONE 330–569–3380<br>WWW.OHIOPRAIRIENURSERY.COM |
| OTHER APPROVED SEED SPECIES MAY BE SUBSTITUTED | | | |

* MOIST MEADOW SEED MIX SHALL BE ADDED TO THE EXCAVATED EASTERN SLOPE OF THE SUNOCO PIPELINE WASHOUT.

A. SITE PREPARATION

1. A SUBSOILER, PLOW OR EITHER IMPLEMENT SHALL BE USED TO REDUCE SOIL COMPACTION AND ALLOW MAXIMUM INFILTRATION. (MAXIMIZING INFILTRATION WILL HELP CONTROL BOTH RUNOFF RATE AND WATER QUALITY). SUBSOILING SHOULD BE DONE WHEN THE SOIL MOISTURE IS LOW ENOUGH TO ALLOW THE SOIL TO CRACK OR FRACTURE. SUBSOILING SHALL NOT BE DONE ON SLIP–PRONE AREAS WHERE SOIL PREPARATION SHOULD BE LIMITED TO WHAT IS NECESSARY FOR ESTABLISHING VEGETATION.

2. THE SITE SHALL BE GRADED AS NEEDED TO PERMIT THE USE OF CONVENTIONAL EQUIPMENT FOR SEEDBED PREPARATION AND SEEDING.

3. RESOIL SHALL BE APPLIED WHERE NEEDED TO ESTABLISH VEGETATION.

B. SEEDBED PREPARATION

C. SEEDING DATES AND SOIL CONDITIONS

SEEDING SHOULD BE DONE MARCH 1 TO MAY 31 OR AUGUST 1 TO SEPTEMBER 30. THESE SEEDING DATES ARE IDEAL BUT, WITH THE USE OF ADDITIONAL MULCH AND IRRIGATION, SEEDINGS MAY BE MADE ANY TIME THROUGHOUT THE GROWING SEASON. TILLAGE/SEEDBED PREPARATION SHOULD BE DONE WHEN THE SOIL IS DRY ENOUGH TO CRUMBLE AND NOT FORM RIBBONS WHEN COMPRESSED BY HAND. FOR WINTER SEEDING, SEE THE FOLLOWING SECTION ON DORMANT SEEDING.

D. DORMANT SEEDINGS

1. SEEDINGS SHALL NOT BE PLANTED FROM OCTOBER 1 THROUGH NOVEMBER 20. DURING THIS PERIOD THE SEEDS ARE LIKELY TO GERMINATE BUT PROBABLY WILL NOT BE ABLE TO SURVIVE THE WINTER.

2. THE FOLLOWING METHODS MAY BE USED FOR "DORMANT SEEDING":

   - FROM OCTOBER 1 THROUGH NOVEMBER 20, PREPARE THE SEEDBED, ADD THE REQUIRED AMOUNTS OF LIME AND FERTILIZER, THEN MULCH AND ANCHOR. AFTER NOVEMBER 20, AND BEFORE MARCH 15, BROADCAST THE SELECTED SEED MIXTURE. INCREASE THE SEEDING RATES BY 50% FOR THIS TYPE OF SEEDING.

   - FROM NOVEMBER 20 THROUGH MARCH 15, WHEN SOIL CONDITIONS PERMIT, PREPARE THE SEEDBED, LIME AND FERTILIZER, APPLY THE SELECTED SEED MIXTURE, MULCH AND ANCHOR. INCREASE THE SEEDING RATES BY 50% THIS TYPE OF SEEDING.

   - APPLY SEED UNIFORMLY WITH A CYCLONE SEEDER, DRILL, CULTIPACKER SEEDER, OR HYDRO–SEEDER (SLURRY MAY INCLUDE SEED AND FERTILIZER) ON A FIRM, MOIST SEEDBED.

   - WHERE FEASIBLE, EXCEPT WHEN A CULTIPACKER TYPE SEEDER IS USED, THE SEEDBED SHOULD BE FIRMED FOLLOWING SEEDING OPERATIONS WITH A CULTIPACKER, ROLLER, OR LIGHT DRAG. ON SLOPING LAND, SEEDING OPERATIONS SHOULD BE ON THE CONTOUR WHERE FEASIBLE.

E. MULCHING

1. MULCH MATERIAL SHALL BE APPLIED IMMEDIATELY AFTER SEEDING. SEEDINGS MADE DURING OPTIMUM SEEDING DATES AND WITH FAVORABLE SOIL CONDITIONS AND ON VERY FLAT AREAS MAY NOT NEED MULCH TO ACHIEVE ADEQUATE STABILIZATION. DORMANT SEEDING SHALL BE MULCHED.

2. MATERIALS:

   - STRAW – IF STRAW IS USED IT SHALL BE UNROTTED SMALL GRAIN STRAW APPLIED AT THE RATE OF 2 TONS/Ac., OR 90Lbs./1,000 Sq. Ft. (TWO OR THREE BALES). THE MULCH SHALL BE SPREAD UNIFORMLY BY HAND OR MECHANICALLY SO THE SOIL SURFACE IS COVERED. FOR UNIFORM DISTRIBUTION OF HAND–SPREAD MULCH, DIVIDE AREA INTO APPROXIMATELY 1,000 sq. ft. SECTIONS AND SPREAD TWO 45 lb. BALES OF STRAW IN EACH SECTION.

   - HYDROSEEDERS – IF WOOD CELLULOSE FIBER IS USED, IT SHALL BE USED AT 2,000 Lb./Ac. OR 46 lb./1,000 Sq. Ft.

   - OTHER – OTHER ACCEPTABLE MULCHES INCLUDE MULCH MATTINGS APPLIED ACCORDING TO MANUFACTURERS RECOMMENDATIONS OR WOOD CHIPS APPLIED AT 10 TO 20 TONS/Ac.

3. STRAW MULCH ANCHORING METHODS:

   STRAW MULCH SHALL BE ANCHORED IMMEDIATELY TO MINIMIZE LOSS BY WIND OR WATER.

   - MECHANICAL – A DISK, CRIMPER, OR SIMILAR TYPE TOOL SHALL BE SET STRAIGHT TO PUNCH OR ANCHOR THE MULCH MATERIAL INTO THE SOIL. STRAW MECHANICALLY ANCHORED SHALL NOT BE FINELY CHOPPED BUT, GENERALLY, BE LEFT LONGER THAN 6 INCHES.

   - MULCH NETTINGS – NETTINGS SHALL BE USED ACCORDING TO THE MANUFACTURERS RECOMMENDATIONS. NETTING MAY BE NECESSARY TO HOLD MULCH IN PLACE IN AREAS OF CONCENTRATED RUNOFF AND ON CRITICAL SLOPES.

   - ASPHALT EMULSION – ASPHALT SHALL BE APPLIED AS RECOMMENDED BY THE MANUFACTURER OR AT THE RATE OF 160 Gal./Ac.

   - SYNTHETIC BINDERS – SYNTHETIC BINDERS SUCH AS ACRYLIC DLR (AGRI–TAC), DCA 70, PETROSET, TERRA TACK OR EQUAL MAY BE USED AT RATES RECOMMENDED BY THE MANUFACTURER.

   - WOOD CELLULOSE FIBER – WOOD CELLULOSE FIBER BINDER SHALL BE APPLIED AT A NET DRY WEIGHT OF 750 Lb./Ac. THE WOOD CELLULOSE FIBER SHALL BE MIXED WITH WATER AND THE MIXTURE SHALL CONTAIN A MAXIMUM OF 50 Lb./100Gal. OF WOOD CELLULOSE FIBER.

F. IRRIGATION

1. PERMANENT SEEDING SHALL INCLUDE IRRIGATION TO ESTABLISH VEGETATION DURING DRY OR HOT WEATHER OR ON ADVERSE SITE CONDITIONS AS NEEDED FOR ADEQUATE MOISTURE FOR SEED GERMINATION AND PLANT GROWTH.

2. EXCESSIVE IRRIGATION RATES SHALL BE AVOIDED AND IRRIGATION MONITORED TO PREVENT EROSION AND DAMAGE FROM RUNOFF.

TOPSOILING SPECIFICATIONS

A. SALVAGING AND STOCKPILING

1. AS INDICATED IN THE SOIL INFORMATION ON THE PLANS, THE DEPTH OF THE EXISTING SURFACE SOIL IS APPROXIMATELY 8 INCHES. CONTACT THE SUMMIT SWCD OFFICE TO DETERMINE SUITABILITY FOR SALVAGING THE EXISTING TOPSOIL FOR PLACEMENT UPON COMPLETION OF CONSTRUCTION.

2. PRIOR TO STRIPPING TOPSOIL, INSTALL DOWNSLOPE EROSION AND SEDIMENTATION CONTROLS AS SHOWN ON THE PLANS.

3. REMOVE THE SURFACE SOIL MATERIAL NO DEEPER THAN INDICATED ABOVE, AND AS DIRECTED BY THE SUMMIT SOIL AND WATER CONSERVATION DISTRICT.

4. CONSTRUCT STOCKPILES IN ACCESSIBLE LOCATIONS THAT DO NOT INTERFERE WITH NATURAL DRAINAGE. INSTALL APPROPRIATE SEDIMENT CONTROLS TO TRAP SEDIMENT SUCH AS SILT FENCE IMMEDIATELY ADJACENT TO THE STOCKPILE OR SEDIMENT TRAPS OR BASINS DOWNSTREAM OF THE STOCKPILE. STOCKPILE SIDE SLOPES SHALL NOT EXCEED A RATIO OF 2:1.

5. IF TOPSOIL IS STORED FOR MORE THAN 21DAYS, IT SHOULD BE TEMPORARY SEEDED, OR COVERED WITH A TARP.

B. SPREADING THE TOPSOIL

1. PRIOR TO APPLYING TOPSOIL, THE TOPSOIL SHOULD BE PULVERIZED.

2. TO ENSURE BONDING, GRADE THE SUBSOIL AND ROUGHEN THE TOP 3–4 IN. BY DISKING.

3. DO NOT APPLY WHEN SITE IS WET, MUDDY, OR FROZEN, BECAUSE IT MAKES SPREADING DIFFICULT, CAUSES COMPACTION PROBLEMS, AND INHIBITS BONDING WITH SUBSOIL.

4. APPLY TOPSOIL EVENLY TO A DEPTH OF AT LEAST 4 INCHES AND COMPACT SLIGHTLY TO IMPROVE CONTACT WITH SUBSOIL.

5. AFTER SPREADING, GRADE AND STABILIZE WITH SEEDING OR APPROPRIATE VEGETATION.

| REV. | DATE | APP# | DESCRIPTION | APPROVAL |
|---|---|---|---|---|

STV
Douglassville, PA Houston, TX Baltimore, MD Williamsport, PA

THE LOCATION OF THE PIPELINE FACILITIES AS SHOWN HEREON MUST BE CONSIDERED AS APPROXIMATE ONLY. BEFORE DIGGING OR FOR AN EXACT LOCATION PLEASE CONTACT YOUR STATES UNDERGROUND UTILITY LOCATION SERVICE.

| ENGINEERING RECORD | |
|---|---|
| DRAWN BY | RFT |
| CHECKED BY | CDA |
| APPROVED BY | BJB |
| DATE | XYZ |
| SCALE | AS NOTED |

INLAND CORPORATION

12-INCH TIFFIN JCT TO EASTON JCT
ALLEGHENY ACCESS PIPELINE PROJECT
EROSION AND SEDIMENTATION CONTROL NOTES

SENECA, HURON, ASHLAND AND WAYNE COUNTIES, OHIO

OLD DRAWING NO.

DWG. NO. 38-15486-TE-814

REV. NO. 0

SOILS ENCOUNTERED WITHIN SENECA COUNTY, OH

MAP UNIT: BGB--BENNINGTON SILT LOAM, 2 TO 6 PERCENT SLOPES
COMPONENT: BENNINGTON (95%)
THE BENNINGTON COMPONENT MAKES UP 95 PERCENT OF THE MAP UNIT. SLOPES ARE 2 TO 6 PERCENT. THIS COMPONENT IS ON FLATS ON GROUND MORAINES. THE PARENT MATERIAL CONSISTS OF TILL. DEPTH TO A ROOT RESTRICTIVE LAYER IS GREATER THAN 60 INCHES. THE NATURAL DRAINAGE CLASS IS SOMEWHAT POORLY DRAINED. WATER MOVEMENT IN THE MOST RESTRICTIVE LAYER IS MODERATELY LOW. AVAILABLE WATER TO A DEPTH OF 60 INCHES IS MODERATE. SHRINK-SWELL POTENTIAL IS LOW. THIS SOIL IS NOT FLOODED. IT IS NOT PONDED. A SEASONAL ZONE OF WATER SATURATION IS AT 21 INCHES DURING JANUARY, FEBRUARY, MARCH, APRIL, MAY, NOVEMBER, DECEMBER. ORGANIC MATTER CONTENT IN THE SURFACE HORIZON IS ABOUT 3 PERCENT. NONIRRIGATED LAND CAPABILITY CLASSIFICATION IS 2E. THIS SOIL DOES NOT MEET HYDRIC CRITERIA. THE CALCIUM CARBONATE EQUIVALENT WITHIN 40 INCHES, TYPICALLY, DOES NOT EXCEED 15 PERCENT.

MAP UNIT: BGB2--BENNINGTON SILT LOAM, 2 TO 6 PERCENT SLOPES, ERODED
COMPONENT: BENNINGTON (90%)
THE BENNINGTON COMPONENT MAKES UP 90 PERCENT OF THE MAP UNIT. SLOPES ARE 2 TO 6 PERCENT. THIS COMPONENT IS ON FLATS ON GROUND MORAINES. THE PARENT MATERIAL CONSISTS OF TILL. DEPTH TO A ROOT RESTRICTIVE LAYER IS GREATER THAN 60 INCHES. THE NATURAL DRAINAGE CLASS IS SOMEWHAT POORLY DRAINED. WATER MOVEMENT IN THE MOST RESTRICTIVE LAYER IS MODERATELY LOW. AVAILABLE WATER TO A DEPTH OF 60 INCHES IS MODERATE. SHRINK-SWELL POTENTIAL IS LOW. THIS SOIL IS NOT FLOODED. IT IS NOT PONDED. A SEASONAL ZONE OF WATER SATURATION IS AT 21 INCHES DURING JANUARY, FEBRUARY, MARCH, APRIL, MAY, NOVEMBER, DECEMBER. ORGANIC MATTER CONTENT IN THE SURFACE HORIZON IS ABOUT 3 PERCENT. NONIRRIGATED LAND CAPABILITY CLASSIFICATION IS 3E. THIS SOIL DOES NOT MEET HYDRIC CRITERIA. THE CALCIUM CARBONATE EQUIVALENT WITHIN 40 INCHES, TYPICALLY, DOES NOT EXCEED 15 PERCENT.

MAP UNIT: BOA--BLOUNT SILT LOAM, 0 TO 2 PERCENT SLOPES
COMPONENT: BLOUNT (85%)
THE BLOUNT COMPONENT MAKES UP 85 PERCENT OF THE MAP UNIT. SLOPES ARE 0 TO 2 PERCENT. THIS COMPONENT IS ON FLATS ON GROUND MORAINES. THE PARENT MATERIAL CONSISTS OF TILL. DEPTH TO A ROOT RESTRICTIVE LAYER IS GREATER THAN 60 INCHES. THE NATURAL DRAINAGE CLASS IS SOMEWHAT POORLY DRAINED. WATER MOVEMENT IN THE MOST RESTRICTIVE LAYER IS MODERATELY LOW. AVAILABLE WATER TO A DEPTH OF 60 INCHES IS MODERATE. SHRINK-SWELL POTENTIAL IS MODERATE. THIS SOIL IS NOT FLOODED. IT IS NOT PONDED. A SEASONAL ZONE OF WATER SATURATION IS AT 24 INCHES DURING JANUARY, FEBRUARY, MARCH, APRIL, MAY. ORGANIC MATTER CONTENT IN THE SURFACE HORIZON IS ABOUT 2 PERCENT. NONIRRIGATED LAND CAPABILITY CLASSIFICATION IS 2W. THIS SOIL DOES NOT MEET HYDRIC CRITERIA. THE CALCIUM CARBONATE EQUIVALENT WITHIN 40 INCHES, TYPICALLY, DOES NOT EXCEED 17 PERCENT.

MAP UNIT: BOB--BLOUNT SILT LOAM, 2 TO 6 PERCENT SLOPES
COMPONENT: BLOUNT (85%)
THE BLOUNT COMPONENT MAKES UP 85 PERCENT OF THE MAP UNIT. SLOPES ARE 2 TO 6 PERCENT. THIS COMPONENT IS ON FLATS ON GROUND MORAINES. THE PARENT MATERIAL CONSISTS OF TILL. DEPTH TO A ROOT RESTRICTIVE LAYER IS GREATER THAN 60 INCHES. THE NATURAL DRAINAGE CLASS IS SOMEWHAT POORLY DRAINED. WATER MOVEMENT IN THE MOST RESTRICTIVE LAYER IS MODERATELY LOW. AVAILABLE WATER TO A DEPTH OF 60 INCHES IS MODERATE. SHRINK-SWELL POTENTIAL IS MODERATE. THIS SOIL IS NOT FLOODED. IT IS NOT PONDED. A SEASONAL ZONE OF WATER SATURATION IS AT 24 INCHES DURING JANUARY, FEBRUARY, MARCH, APRIL, MAY. ORGANIC MATTER CONTENT IN THE SURFACE HORIZON IS ABOUT 2 PERCENT. NONIRRIGATED LAND CAPABILITY CLASSIFICATION IS 2E. THIS SOIL DOES NOT MEET HYDRIC CRITERIA. THE CALCIUM CARBONATE EQUIVALENT WITHIN 40 INCHES, TYPICALLY, DOES NOT EXCEED 18 PERCENT.

MAP UNIT: CH--CHAGRIN SILT LOAM, OCCASIONALLY FLOODED
COMPONENT: CHAGRIN (85%)
THE CHAGRIN COMPONENT MAKES UP 85 PERCENT OF THE MAP UNIT. SLOPES ARE 0 TO 2 PERCENT. THIS COMPONENT IS ON FLOOD PLAINS. THE PARENT MATERIAL CONSISTS OF ALLUVIUM. DEPTH TO A ROOT RESTRICTIVE LAYER IS GREATER THAN 60 INCHES. THE NATURAL DRAINAGE CLASS IS WELL DRAINED. WATER MOVEMENT IN THE MOST RESTRICTIVE LAYER IS MODERATELY HIGH. AVAILABLE WATER TO A DEPTH OF 60 INCHES IS HIGH. SHRINK-SWELL POTENTIAL IS LOW. THIS SOIL IS OCCASIONALLY FLOODED. IT IS NOT PONDED. A SEASONAL ZONE OF WATER SATURATION IS AT 60 INCHES DURING FEBRUARY, MARCH. ORGANIC MATTER CONTENT IN THE SURFACE HORIZON IS ABOUT 3 PERCENT. NONIRRIGATED LAND CAPABILITY CLASSIFICATION IS 2W. THIS SOIL DOES NOT MEET HYDRIC CRITERIA.

MAP UNIT: CO--COLWOOD SILT LOAM
COMPONENT: COLWOOD (85%)
THE COLWOOD COMPONENT MAKES UP 85 PERCENT OF THE MAP UNIT. SLOPES ARE 0 TO 2 PERCENT. THIS COMPONENT IS ON LAKE PLAINS. THE PARENT MATERIAL CONSISTS OF GLACIOLACUSTRINE DEPOSITS. DEPTH TO A ROOT RESTRICTIVE LAYER IS GREATER THAN 60 INCHES. THE NATURAL DRAINAGE CLASS IS VERY POORLY DRAINED. WATER MOVEMENT IN THE MOST RESTRICTIVE LAYER IS MODERATELY HIGH. AVAILABLE WATER TO A DEPTH OF 60 INCHES IS HIGH. SHRINK-SWELL POTENTIAL IS MODERATE. THIS SOIL IS NOT FLOODED. IT IS FREQUENTLY PONDED. A SEASONAL ZONE OF WATER SATURATION IS AT 9 INCHES DURING JANUARY, FEBRUARY, MARCH, APRIL, MAY, OCTOBER, NOVEMBER, DECEMBER. ORGANIC MATTER CONTENT IN THE SURFACE HORIZON IS ABOUT 4 PERCENT. NONIRRIGATED LAND CAPABILITY CLASSIFICATION IS 2W. THIS SOIL MEETS HYDRIC CRITERIA.

MAP UNIT: DMA--DIGBY LOAM, 1 TO 4 PERCENT SLOPES
COMPONENT: DIGBY (95%)
THE DIGBY COMPONENT MAKES UP 95 PERCENT OF THE MAP UNIT. SLOPES ARE 1 TO 4 PERCENT. THIS COMPONENT IS ON OUTWASH TERRACES. THE PARENT MATERIAL CONSISTS OF OUTWASH. DEPTH TO A ROOT RESTRICTIVE LAYER IS GREATER THAN 60 INCHES. THE NATURAL DRAINAGE CLASS IS SOMEWHAT POORLY DRAINED. WATER MOVEMENT IN THE MOST RESTRICTIVE LAYER IS MODERATELY HIGH. AVAILABLE WATER TO A DEPTH OF 60 INCHES IS MODERATE. SHRINK-SWELL POTENTIAL IS LOW. THIS SOIL IS NOT FLOODED. IT IS NOT PONDED. A SEASONAL ZONE OF WATER SATURATION IS AT 21 INCHES DURING JANUARY, FEBRUARY, MARCH, APRIL. ORGANIC MATTER CONTENT IN THE SURFACE HORIZON IS ABOUT 3 PERCENT. NONIRRIGATED LAND CAPABILITY CLASSIFICATION IS 2W. THIS SOIL DOES NOT MEET HYDRIC CRITERIA. THE CALCIUM CARBONATE EQUIVALENT WITHIN 40 INCHES, TYPICALLY, DOES NOT EXCEED 20 PERCENT.

MAP UNIT: FCA--FITCHVILLE SILT LOAM, 1 TO 4 PERCENT SLOPES
COMPONENT: FITCHVILLE (95%)
THE FITCHVILLE COMPONENT MAKES UP 90 PERCENT OF THE MAP UNIT. SLOPES ARE 1 TO 4 PERCENT. THIS COMPONENT IS ON LAKE PLAINS. THE PARENT MATERIAL CONSISTS OF GLACIOLACUSTRINE DEPOSITS. DEPTH TO A ROOT RESTRICTIVE LAYER IS GREATER THAN 60 INCHES. THE NATURAL DRAINAGE CLASS IS SOMEWHAT POORLY DRAINED. WATER MOVEMENT IN THE MOST RESTRICTIVE LAYER IS MODERATELY HIGH. AVAILABLE WATER TO A DEPTH OF 60 INCHES IS HIGH. SHRINK-SWELL POTENTIAL IS MODERATE. THIS SOIL IS NOT FLOODED. IT IS NOT PONDED. A SEASONAL ZONE OF WATER SATURATION IS AT 21 INCHES DURING JANUARY, FEBRUARY, MARCH, APRIL, MAY, JUNE, NOVEMBER, DECEMBER. ORGANIC MATTER CONTENT IN THE SURFACE HORIZON IS ABOUT 2 PERCENT. NONIRRIGATED LAND CAPABILITY CLASSIFICATION IS 2W. THIS SOIL DOES NOT MEET HYDRIC CRITERIA.

MAP UNIT: GAA--GALLMAN LOAM, 0 TO 2 PERCENT SLOPES
COMPONENT: GALLMAN (90%)
THE GALLMAN COMPONENT MAKES UP 90 PERCENT OF THE MAP UNIT. SLOPES ARE 0 TO 2 PERCENT. THIS COMPONENT IS ON OUTWASH PLAINS. THE PARENT MATERIAL CONSISTS OF OUTWASH. DEPTH TO A ROOT RESTRICTIVE LAYER IS GREATER THAN 60 INCHES. THE NATURAL DRAINAGE CLASS IS WELL DRAINED. WATER MOVEMENT IN THE MOST RESTRICTIVE LAYER IS HIGH. AVAILABLE WATER TO A DEPTH OF 60 INCHES IS MODERATE. SHRINK-SWELL POTENTIAL IS LOW. THIS SOIL IS NOT FLOODED. IT IS NOT PONDED. THERE IS NO ZONE OF WATER SATURATION WITHIN A DEPTH OF 72 INCHES. ORGANIC MATTER CONTENT IN THE SURFACE HORIZON IS ABOUT 2 PERCENT. NONIRRIGATED LAND CAPABILITY CLASSIFICATION IS 1. THIS SOIL DOES NOT MEET HYDRIC CRITERIA.

MAP UNIT: GAB--GALLMAN LOAM, 2 TO 6 PERCENT SLOPES
COMPONENT: GALLMAN (90%)
THE GALLMAN COMPONENT MAKES UP 90 PERCENT OF THE MAP UNIT. SLOPES ARE 2 TO 6 PERCENT. THIS COMPONENT IS ON OUTWASH PLAINS. THE PARENT MATERIAL CONSISTS OF OUTWASH. DEPTH TO A ROOT RESTRICTIVE LAYER IS GREATER THAN 60 INCHES. THE NATURAL DRAINAGE CLASS IS WELL DRAINED. WATER MOVEMENT IN THE MOST RESTRICTIVE LAYER IS HIGH. AVAILABLE WATER TO A DEPTH OF 60 INCHES IS MODERATE. SHRINK-SWELL POTENTIAL IS LOW. THIS SOIL IS NOT FLOODED. IT IS NOT PONDED. THERE IS NO ZONE OF WATER SATURATION WITHIN A DEPTH OF 72 INCHES. ORGANIC MATTER CONTENT IN THE SURFACE HORIZON IS ABOUT 2 PERCENT. NONIRRIGATED LAND CAPABILITY CLASSIFICATION IS 2E. THIS SOIL DOES NOT MEET HYDRIC CRITERIA.

MAP UNIT: GWB--GLYNWOOD SILT LOAM, 2 TO 6 PERCENT SLOPES
COMPONENT: GLYNWOOD (85%)
THE GLYNWOOD COMPONENT MAKES UP 85 PERCENT OF THE MAP UNIT. SLOPES ARE 2 TO 6 PERCENT. THIS COMPONENT IS ON GROUND MORAINES. THE PARENT MATERIAL CONSISTS OF TILL. DEPTH TO A ROOT RESTRICTIVE LAYER IS GREATER THAN 60 INCHES. THE NATURAL DRAINAGE CLASS IS MODERATELY WELL DRAINED. WATER MOVEMENT IN THE MOST RESTRICTIVE LAYER IS MODERATELY LOW. AVAILABLE WATER TO A DEPTH OF 60 INCHES IS MODERATE. SHRINK-SWELL POTENTIAL IS MODERATE. THIS SOIL IS NOT FLOODED. IT IS NOT PONDED. A SEASONAL ZONE OF WATER SATURATION IS AT 33 INCHES DURING JANUARY, FEBRUARY, MARCH, APRIL. ORGANIC MATTER CONTENT IN THE SURFACE HORIZON IS ABOUT 2 PERCENT. NONIRRIGATED LAND CAPABILITY CLASSIFICATION IS 2E. THIS SOIL DOES NOT MEET HYDRIC CRITERIA. THE CALCIUM CARBONATE EQUIVALENT WITHIN 40 INCHES, TYPICALLY, DOES NOT EXCEED 29 PERCENT.

MAP UNIT: GWD5C2--GLYNWOOD CLAY LOAM, 6 TO 12 PERCENT SLOPES, ERODED
COMPONENT: GLYNWOOD (85%)
THE GLYNWOOD COMPONENT MAKES UP 85 PERCENT OF THE MAP UNIT. SLOPES ARE 6 TO 12 PERCENT. THIS COMPONENT IS ON END MORAINES. THE PARENT MATERIAL CONSISTS OF CLAYEY TILL. DEPTH TO A ROOT RESTRICTIVE LAYER, DENSIC MATERIAL, IS 24 TO 36 INCHES. THE NATURAL DRAINAGE CLASS IS MODERATELY WELL DRAINED. WATER MOVEMENT IN THE MOST RESTRICTIVE LAYER IS LOW. AVAILABLE WATER TO A DEPTH OF 60 INCHES IS MODERATE. SHRINK-SWELL POTENTIAL IS MODERATE. THIS SOIL IS NOT FLOODED. IT IS NOT PONDED. A SEASONAL ZONE OF WATER SATURATION IS AT 18 INCHES DURING JANUARY, FEBRUARY, MARCH, APRIL. ORGANIC MATTER CONTENT IN THE SURFACE HORIZON IS ABOUT 2 PERCENT. NONIRRIGATED LAND CAPABILITY CLASSIFICATION IS 4E. THIS SOIL DOES NOT MEET HYDRIC CRITERIA. THE CALCIUM CARBONATE EQUIVALENT WITHIN 40 INCHES, TYPICALLY, DOES NOT EXCEED 29 PERCENT

MAP UNIT: GXB2--GLYNWOOD SILTY CLAY LOAM, 2 TO 6 PERCENT SLOPES, ERODED
COMPONENT: GLYNWOOD (90%)
THE GLYNWOOD COMPONENT MAKES UP 90 PERCENT OF THE MAP UNIT. SLOPES ARE 2 TO 6 PERCENT. THIS COMPONENT IS ON GROUND MORAINES. THE PARENT MATERIAL CONSISTS OF TILL. DEPTH TO A ROOT RESTRICTIVE LAYER IS GREATER THAN 60 INCHES. THE NATURAL DRAINAGE CLASS IS MODERATELY WELL DRAINED. WATER MOVEMENT IN THE MOST RESTRICTIVE LAYER IS MODERATELY LOW. AVAILABLE WATER TO A DEPTH OF 60 INCHES IS MODERATE. SHRINK-SWELL POTENTIAL IS MODERATE. THIS SOIL IS NOT FLOODED. IT IS NOT PONDED. A SEASONAL ZONE OF WATER SATURATION IS AT 33 INCHES DURING JANUARY, FEBRUARY, MARCH, APRIL. ORGANIC MATTER CONTENT IN THE SURFACE HORIZON IS ABOUT 2 PERCENT. NONIRRIGATED LAND CAPABILITY CLASSIFICATION IS 3E. THIS SOIL DOES NOT MEET HYDRIC CRITERIA. THE CALCIUM CARBONATE EQUIVALENT WITHIN 40 INCHES, TYPICALLY, DOES NOT EXCEED 29 PERCENT.

MAP UNIT: HAA--HANEY LOAM, 0 TO 2 PERCENT SLOPES
COMPONENT: HANEY (90%)
THE HANEY COMPONENT MAKES UP 90 PERCENT OF THE MAP UNIT. SLOPES ARE 0 TO 2 PERCENT. THIS COMPONENT IS ON OUTWASH PLAINS. THE PARENT MATERIAL CONSISTS OF OUTWASH. DEPTH TO A ROOT RESTRICTIVE LAYER IS GREATER THAN 60 INCHES. THE NATURAL DRAINAGE CLASS IS MODERATELY WELL DRAINED. WATER MOVEMENT IN THE MOST RESTRICTIVE LAYER IS MODERATELY HIGH. AVAILABLE WATER TO A DEPTH OF 60 INCHES IS MODERATE. SHRINK-SWELL POTENTIAL IS LOW. THIS SOIL IS NOT FLOODED. IT IS NOT PONDED. A SEASONAL ZONE OF WATER SATURATION IS AT 33 INCHES DURING JANUARY, FEBRUARY, MARCH, APRIL. ORGANIC MATTER CONTENT IN THE SURFACE HORIZON IS ABOUT 2 PERCENT. NONIRRIGATED LAND CAPABILITY CLASSIFICATION IS 1. THIS SOIL DOES NOT MEET HYDRIC CRITERIA. THE CALCIUM CARBONATE EQUIVALENT WITHIN 40 INCHES, TYPICALLY, DOES NOT EXCEED 18 PERCENT.

MAP UNIT: HAB--HANEY LOAM, 2 TO 6 PERCENT SLOPES
COMPONENT: HANEY (90%)
THE HANEY COMPONENT MAKES UP 90 PERCENT OF THE MAP UNIT. SLOPES ARE 2 TO 6 PERCENT. THIS COMPONENT IS ON OUTWASH PLAINS. THE PARENT MATERIAL CONSISTS OF OUTWASH. DEPTH TO A ROOT RESTRICTIVE LAYER IS GREATER THAN 60 INCHES. THE NATURAL DRAINAGE CLASS IS MODERATELY WELL DRAINED. WATER MOVEMENT IN THE MOST RESTRICTIVE LAYER IS MODERATELY HIGH. AVAILABLE WATER TO A DEPTH OF 60 INCHES IS MODERATE. SHRINK-SWELL POTENTIAL IS LOW. THIS SOIL IS NOT FLOODED. IT IS NOT PONDED. A SEASONAL ZONE OF WATER SATURATION IS AT 33 INCHES DURING JANUARY, FEBRUARY, MARCH, APRIL. ORGANIC MATTER CONTENT IN THE SURFACE HORIZON IS ABOUT 2 PERCENT. NONIRRIGATED LAND CAPABILITY CLASSIFICATION IS 2E. THIS SOIL DOES NOT MEET HYDRIC CRITERIA. THE CALCIUM CARBONATE EQUIVALENT WITHIN 40 INCHES, TYPICALLY, DOES NOT EXCEED 18 PERCENT.

MAP UNIT: HAC2--HANEY LOAM, 6 TO 12 PERCENT SLOPES, ERODED
COMPONENT: HANEY (90%)
THE HANEY COMPONENT MAKES UP 90 PERCENT OF THE MAP UNIT. SLOPES ARE 6 TO 12 PERCENT. THIS COMPONENT IS ON OUTWASH PLAINS. THE PARENT MATERIAL CONSISTS OF OUTWASH. DEPTH TO A ROOT RESTRICTIVE LAYER IS GREATER THAN 60 INCHES. THE NATURAL DRAINAGE CLASS IS MODERATELY WELL DRAINED. WATER MOVEMENT IN THE MOST RESTRICTIVE LAYER IS MODERATELY HIGH. AVAILABLE WATER TO A DEPTH OF 60 INCHES IS MODERATE. SHRINKSWELL POTENTIAL IS LOW. THIS SOIL IS NOT FLOODED. IT IS NOT PONDED. A SEASONAL ZONE OF WATER SATURATION IS AT 33 INCHES DURING JANUARY, FEBRUARY, MARCH, APRIL. ORGANIC MATTER CONTENT IN THE SURFACE HORIZON IS ABOUT 2 PERCENT. NONIRRIGATED LAND CAPABILITY CLASSIFICATION IS 3E. THIS SOIL DOES NOT MEET HYDRIC CRITERIA. THE CALCIUM CARBONATE EQUIVALENT WITHIN 40 INCHES, TYPICALLY, DOES NOT EXCEED 18 PERCENT.

MAP UNIT: HCA--HOYTVILLE SILTY CLAY LOAM, 0 TO 1 PERCENT SLOPES
COMPONENT: HOYTVILLE (91%)
THE HOYTVILLE COMPONENT MAKES UP 91 PERCENT OF THE MAP UNIT. SLOPES ARE 0 TO 1 PERCENT. THIS COMPONENT IS ON FLATS ON LAKE PLAINS. THE PARENT MATERIAL CONSISTS OF WAVE-PLANED WISCONSINAN CLAYEY TILL. DEPTH TO A ROOT RESTRICTIVE LAYER, DENSIC MATERIAL, IS 46 TO 70 INCHES. THE NATURAL DRAINAGE CLASS IS VERY POORLY DRAINED. WATER MOVEMENT IN THE MOST RESTRICTIVE LAYER IS LOW. AVAILABLE WATER TO A DEPTH OF 60 INCHES IS MODERATE. SHRINK-SWELL POTENTIAL IS MODERATE. THIS SOIL IS NOT FLOODED. IT IS FREQUENTLY PONDED. ASEASONAL ZONE OF WATER SATURATION IS AT 6 INCHES DURING JANUARY, FEBRUARY, MARCH, APRIL. ORGANIC MATTER CONTENT IN THE SURFACE HORIZON IS ABOUT 5 PERCENT. NONIRRIGATED LAND CAPABILITY CLASSIFICATION IS 2W. THIS SOIL MEETS HYDRIC CRITERIA. THE CALCIUM CARBONATE EQUIVALENT WITHIN 40 INCHES, TYPICALLY, DOES NOT EXCEED 15 PERCENT.

MAP UNIT: HKA--HASKINS LOAM, 0 TO 2 PERCENT SLOPES
COMPONENT: HASKINS (90%)
THE HASKINS COMPONENT MAKES UP 90 PERCENT OF THE MAP UNIT. SLOPES ARE 0 TO 2 PERCENT. THIS COMPONENT IS ON LAKE PLAINS. THE PARENT MATERIAL CONSISTS OF GLACIOLACUSTRINE DEPOSITS OVER TILL. DEPTH TO A ROOT RESTRICTIVE LAYER IS GREATER THAN 60 INCHES. THE NATURAL DRAINAGE CLASS IS SOMEWHAT POORLY DRAINED. WATER MOVEMENT IN THE MOST RESTRICTIVE LAYER IS LOW. AVAILABLE WATER TO A DEPTH OF 60 INCHES IS MODERATE. SHRINK-SWELL POTENTIAL IS MODERATE. THIS SOIL IS NOT FLOODED. IT IS NOT PONDED. A SEASONAL ZONE OF WATER SATURATION IS AT 21 INCHES DURING JANUARY, FEBRUARY, MARCH, APRIL. ORGANIC MATTER CONTENT IN THE SURFACE HORIZON IS ABOUT 2 PERCENT. NONIRRIGATED LAND CAPABILITY CLASSIFICATION IS 2W. THIS SOIL DOES NOT MEET HYDRIC CRITERIA. THE CALCIUM CARBONATE EQUIVALENT WITHIN 40 INCHES, TYPICALLY, DOES NOT EXCEED 15 PERCENT.

MAP UNIT: HKB--HASKINS LOAM, 2 TO 6 PERCENT SLOPES
COMPONENT: HASKINS (90%)
THE HASKINS COMPONENT MAKES UP 90 PERCENT OF THE MAP UNIT. SLOPES ARE 2 TO 6 PERCENT. THIS COMPONENT IS ON LAKE PLAINS. THE PARENT MATERIAL CONSISTS OF GLACIOLACUSTRINE DEPOSITS OVER TILL. DEPTH TO A ROOT RESTRICTIVE LAYER IS GREATER THAN 60 INCHES. THE NATURAL DRAINAGE CLASS IS SOMEWHAT POORLY DRAINED. WATER MOVEMENT IN THE MOST RESTRICTIVE LAYER IS LOW. AVAILABLE WATER TO A DEPTH OF 60 INCHES IS MODERATE. SHRINK-SWELL POTENTIAL IS MODERATE. THIS SOIL IS NOT FLOODED. IT IS NOT PONDED. A SEASONAL ZONE OF WATER SATURATION IS AT 21 INCHES DURING JANUARY, FEBRUARY, MARCH, APRIL. ORGANIC MATTER CONTENT IN THE SURFACE HORIZON IS ABOUT 2 PERCENT. NONIRRIGATED LAND CAPABILITY CLASSIFICATION IS 2E. THIS SOIL DOES NOT MEET HYDRIC CRITERIA. THE CALCIUM CARBONATE EQUIVALENT WITHIN 40 INCHES, TYPICALLY, DOES NOT EXCEED 15 PERCENT.

MAP UNIT: KBA--KIBBIE FINE SANDY LOAM, 0 TO 2 PERCENT SLOPES
COMPONENT: KIBBIE (90%)
THE KIBBIE COMPONENT MAKES UP 90 PERCENT OF THE MAP UNIT. SLOPES ARE 0 TO 2 PERCENT. THIS COMPONENT IS ON LAKE PLAINS. THE PARENT MATERIAL CONSISTS OF GLACIOLACUSTRINE DEPOSITS. DEPTH TO A ROOT RESTRICTIVE LAYER IS GREATER THAN 60 INCHES. THE NATURAL DRAINAGE CLASS IS SOMEWHAT POORLY DRAINED. WATER MOVEMENT IN THE MOST RESTRICTIVE LAYER IS MODERATELY HIGH. AVAILABLE WATER TO A DEPTH OF 60 INCHES IS HIGH. SHRINK-SWELL POTENTIAL IS LOW. THIS SOIL IS NOT FLOODED. IT IS NOT PONDED. A SEASONAL ZONE OF WATER SATURATION IS AT 18 INCHES DURING JANUARY, FEBRUARY, MARCH, APRIL, MAY, NOVEMBER, DECEMBER. ORGANIC MATTER CONTENT IN THE SURFACE HORIZON IS ABOUT 2 PERCENT. NONIRRIGATED LAND CAPABILITY CLASSIFICATION IS 2W. THIS SOIL DOES NOT MEET HYDRIC CRITERIA. THE CALCIUM CARBONATE EQUIVALENT WITHIN 40 INCHES, TYPICALLY, DOES NOT EXCEED 23 PERCENT.

MAP UNIT: LE--LENAWEE SILTY CLAY LOAM
COMPONENT: LENAWEE (95%)
THE LENAWEE COMPONENT MAKES UP 95 PERCENT OF THE MAP UNIT. SLOPES ARE 0 TO 2 PERCENT. THIS COMPONENT IS ON DEPRESSIONS. THE PARENT MATERIAL CONSISTS OF GLACIOLACUSTRINE DEPOSITS. DEPTH TO A ROOT RESTRICTIVE LAYER IS GREATER THAN 60 INCHES. THE NATURAL DRAINAGE CLASS IS VERY POORLY DRAINED. WATER MOVEMENT IN THE MOST RESTRICTIVE LAYER IS MODERATELY HIGH. AVAILABLE WATER TO A DEPTH OF 60 INCHES IS HIGH. SHRINK-SWELL POTENTIAL IS MODERATE. THIS SOIL IS NOT FLOODED. IT IS FREQUENTLY PONDED. A SEASONAL ZONE OF WATER SATURATION IS AT 6 INCHES DURING JANUARY, FEBRUARY, MARCH, APRIL, MAY, NOVEMBER, DECEMBER. ORGANIC MATTER CONTENT IN THE SURFACE HORIZON IS ABOUT 8 PERCENT. NONIRRIGATED LAND CAPABILITY CLASSIFICATION IS 2W. THIS SOIL MEETS HYDRIC CRITERIA.

MAP UNIT: MF--MILLGROVE LOAM
COMPONENT: MILLGROVE (95%)
THE MILLGROVE COMPONENT MAKES UP 95 PERCENT OF THE MAP UNIT. SLOPES ARE 0 TO 2 PERCENT. THIS COMPONENT IS ON DEPRESSIONS. THE PARENT MATERIAL CONSISTS OF OUTWASH. DEPTH TO A ROOT RESTRICTIVE LAYER IS GREATER THAN 60 INCHES. THE NATURAL DRAINAGE CLASS IS VERY POORLY DRAINED. WATER MOVEMENT IN THE MOST RESTRICTIVE LAYER IS MODERATELY HIGH. AVAILABLE WATER TO A DEPTH OF 60 INCHES IS MODERATE. SHRINK-SWELL POTENTIAL IS MODERATE. THIS SOIL IS NOT FLOODED. IT IS FREQUENTLY PONDED. A SEASONAL ZONE OF WATER SATURATION IS AT 6 INCHES DURING JANUARY, FEBRUARY, MARCH, APRIL, MAY, NOVEMBER, DECEMBER. ORGANIC MATTER CONTENT IN THE SURFACE HORIZON IS ABOUT 6 PERCENT. NONIRRIGATED LAND CAPABILITY CLASSIFICATION IS 2W. THIS SOIL MEETS HYDRIC CRITERIA.

MAP UNIT: MNA--MILTON SILT LOAM, 0 TO 2 PERCENT SLOPES
COMPONENT: MILTON (85%)
THE MILTON COMPONENT MAKES UP 85 PERCENT OF THE MAP UNIT. SLOPES ARE 0 TO 2 PERCENT. THIS COMPONENT IS ON TILL PLAINS. THE PARENT MATERIAL CONSISTS OF LOESS OVER TILL OVER RESIDUUM WEATHERED FROM LIMESTONE AND DOLOMITE. DEPTH TO A ROOT RESTRICTIVE LAYER, BEDROCK (LITHIC), IS 20 TO 40 INCHES. THE NATURAL DRAINAGE CLASS IS WELL DRAINED. WATER MOVEMENT IN THE MOST RESTRICTIVE LAYER IS MODERATELY HIGH. AVAILABLE WATER TO A DEPTH OF 60 INCHES IS LOW. SHRINK-SWELL POTENTIAL IS MODERATE. THIS SOIL IS NOT FLOODED. IT IS NOT PONDED. THERE IS NO ZONE OF WATER SATURATION WITHIN A DEPTH OF 72 INCHES. ORGANIC MATTER CONTENT IN THE SURFACE HORIZON IS ABOUT 2 PERCENT. NONIRRIGATED LAND CAPABILITY CLASSIFICATION IS 2S. THIS SOIL DOES NOT MEET HYDRIC CRITERIA. THE CALCIUM CARBONATE EQUIVALENT WITHIN 40 INCHES, TYPICALLY, DOES NOT EXCEED 3 PERCENT.

MAP UNIT: MOA--MILTON VARIANT LOAM, 0 TO 2 PERCENT SLOPES
COMPONENT: MILTON VARIANT (85%)
THE MILTON VARIANT COMPONENT MAKES UP 85 PERCENT OF THE MAP UNIT. SLOPES ARE 0 TO 2 PERCENT. THIS COMPONENT IS ON STREAM TERRACES. THE PARENT MATERIAL CONSISTS OF OUTWASH OVER RESIDUUM WEATHERED FROM LIMESTONE. DEPTH TO A ROOT RESTRICTIVE LAYER, BEDROCK (LITHIC), IS 20 TO 40 INCHES. THE NATURAL DRAINAGE CLASS IS WELL DRAINED. WATER MOVEMENT IN THE MOST RESTRICTIVE LAYER IS MODERATELY HIGH. AVAILABLE WATER TO A DEPTH OF 60 INCHES IS MODERATE. SHRINK-SWELL POTENTIAL IS MODERATE. THIS SOIL IS NOT FLOODED. IT IS NOT PONDED. THERE IS NO ZONE OF WATER SATURATION WITHIN A DEPTH OF 72 INCHES. ORGANIC MATTER CONTENT IN THE SURFACE HORIZON IS ABOUT 6 PERCENT. NONIRRIGATED LAND CAPABILITY CLASSIFICATION IS 2S. THIS SOIL DOES NOT MEET HYDRIC CRITERIA. THE CALCIUM CARBONATE EQUIVALENT WITHIN 40 INCHES, TYPICALLY, DOES NOT EXCEED 10 PERCENT.

MAP UNIT: MRF2--MORLEY SILT LOAM, 18 TO 50 PERCENT SLOPES, ERODED
COMPONENT: MORLEY (85%)
THE MORLEY COMPONENT MAKES UP 85 PERCENT OF THE MAP UNIT. SLOPES ARE 18 TO 50 PERCENT. THIS COMPONENT IS ON TILL PLAINS. THE PARENT MATERIAL CONSISTS OF TILL. DEPTH TO A ROOT RESTRICTIVE LAYER IS GREATER THAN 60 INCHES. THE NATURAL DRAINAGE CLASS IS WELL DRAINED. WATER MOVEMENT IN THE MOST RESTRICTIVE LAYER IS MODERATELY LOW. AVAILABLE WATER TO A DEPTH OF 60 INCHES IS MODERATE. SHRINK-SWELL POTENTIAL IS MODERATE. THIS SOIL IS NOT FLOODED. IT IS NOT PONDED. THERE IS NO ZONE OF WATER SATURATION WITHIN A DEPTH OF 72 INCHES. ORGANIC MATTER CONTENT IN THE SURFACE HORIZON IS ABOUT 2 PERCENT. NONIRRIGATED LAND CAPABILITY CLASSIFICATION IS 7E. THIS SOIL DOES NOT MEET HYDRIC CRITERIA. THE CALCIUM CARBONATE EQUIVALENT WITHIN 40 INCHES, TYPICALLY, DOES NOT EXCEED 15 PERCENT.

MAP UNIT: NPA--NAPPANEE SILT LOAM, 0 TO 2 PERCENT SLOPES
COMPONENT: NAPPANEE (85%)
THE NAPPANEE COMPONENT MAKES UP 85 PERCENT OF THE MAP UNIT. SLOPES ARE 0 TO 2 PERCENT. THIS COMPONENT IS ON LAKE PLAINS. THE PARENT MATERIAL CONSISTS OF TILL. DEPTH TO A ROOT RESTRICTIVE LAYER IS GREATER THAN 60 INCHES. THE NATURAL DRAINAGE CLASS IS SOMEWHAT POORLY DRAINED. WATER MOVEMENT IN THE MOST RESTRICTIVE LAYER IS LOW. AVAILABLE WATER TO A DEPTH OF 60 INCHES IS MODERATE. SHRINK-SWELL POTENTIAL IS HIGH. THIS SOIL IS NOT FLOODED. IT IS NOT PONDED. A SEASONAL ZONE OF WATER SATURATION IS AT 18 INCHES DURING JANUARY, FEBRUARY, MARCH, APRIL, MAY, NOVEMBER, DECEMBER. ORGANIC MATTER CONTENT IN THE SURFACE HORIZON IS ABOUT 2 PERCENT. NONIRRIGATED LAND CAPABILITY CLASSIFICATION IS 3W. THIS SOIL DOES NOT MEET HYDRIC CRITERIA. THE CALCIUM CARBONATE EQUIVALENT WITHIN 40 INCHES, TYPICALLY, DOES NOT EXCEED 15 PERCENT.

MAP UNIT: PA--PANDORA SILT LOAM
COMPONENT: PANDORA (85%)
THE PANDORA COMPONENT MAKES UP 85 PERCENT OF THE MAP UNIT. SLOPES ARE 0 TO 2 PERCENT. THIS COMPONENT IS ON DEPRESSIONS. THE PARENT MATERIAL CONSISTS OF TILL. DEPTH TO A ROOT RESTRICTIVE LAYER IS GREATER THAN 60 INCHES. THE NATURAL DRAINAGE CLASS IS POORLY DRAINED. WATER MOVEMENT IN THE MOST RESTRICTIVE LAYER IS MODERATELY LOW. AVAILABLE WATER TO A DEPTH OF 60 INCHES IS MODERATE. SHRINK-SWELL POTENTIAL IS MODERATE. THIS SOIL IS NOT FLOODED. IT IS FREQUENTLY PONDED. A SEASONAL ZONE OF WATER SATURATION IS AT 6 INCHES DURING JANUARY, FEBRUARY, MARCH, APRIL, MAY, DECEMBER. ORGANIC MATTER CONTENT IN THE SURFACE HORIZON IS ABOUT 4 PERCENT. NONIRRIGATED LAND CAPABILITY CLASSIFICATION IS 2W. THIS SOIL MEETS HYDRIC CRITERIA.

MAP UNIT: PB--PANDORA SILTY CLAY LOAM
COMPONENT: PANDORA (85%)
THE PANDORA COMPONENT MAKES UP 85 PERCENT OF THE MAP UNIT. SLOPES ARE 0 TO 2 PERCENT. THIS COMPONENT IS ON DEPRESSIONS. THE PARENT MATERIAL CONSISTS OF TILL. DEPTH TO A ROOT RESTRICTIVE LAYER IS GREATER THAN 60 INCHES. THE NATURAL DRAINAGE CLASS IS POORLY DRAINED. WATER MOVEMENT IN THE MOST RESTRICTIVE LAYER IS MODERATELY LOW. AVAILABLE WATER TO A DEPTH OF 60 INCHES IS MODERATE. SHRINK-SWELL POTENTIAL IS MODERATE. THIS SOIL IS NOT FLOODED. IT IS FREQUENTLY PONDED. A SEASONAL ZONE OF WATER SATURATION IS AT 6 INCHES DURING JANUARY, FEBRUARY, MARCH, APRIL, MAY, DECEMBER. ORGANIC MATTER CONTENT IN THE SURFACE HORIZON IS ABOUT 4 PERCENT. NONIRRIGATED LAND CAPABILITY CLASSIFICATION IS 2W. THIS SOIL MEETS HYDRIC CRITERIA. THE CALCIUM CARBONATE EQUIVALENT WITHIN 40 INCHES, TYPICALLY, DOES NOT EXCEED 5 PERCENT.

MAP UNIT: RMB--RAWSON LOAM, 2 TO 6 PERCENT SLOPES
COMPONENT: RAWSON (85%)
THE RAWSON COMPONENT MAKES UP 85 PERCENT OF THE MAP UNIT. SLOPES ARE 2 TO 6 PERCENT. THIS COMPONENT IS ON TILL PLAINS. THE PARENT MATERIAL CONSISTS OF OUTWASH OVER TILL. DEPTH TO A ROOT RESTRICTIVE LAYER IS GREATER THAN 60 INCHES. THE NATURAL DRAINAGE CLASS IS MODERATELY WELL DRAINED. WATER MOVEMENT IN THE MOST RESTRICTIVE LAYER IS LOW. AVAILABLE WATER TO A DEPTH OF 60 INCHES IS MODERATE. SHRINK-SWELL POTENTIAL IS MODERATE. THIS SOIL IS NOT FLOODED. IT IS NOT PONDED. A SEASONAL ZONE OF WATER SATURATION IS AT 39 INCHES DURING JANUARY, FEBRUARY, MARCH, APRIL. ORGANIC MATTER CONTENT IN THE SURFACE HORIZON IS ABOUT 2 PERCENT. NONIRRIGATED LAND CAPABILITY CLASSIFICATION IS 2E. THIS SOIL DOES NOT MEET HYDRIC CRITERIA.

MAP UNIT: RU--ROSS SILT LOAM, OCCASIONALLY FLOODED
COMPONENT: ROSS (90%)
THE ROSS COMPONENT MAKES UP 90 PERCENT OF THE MAP UNIT. SLOPES ARE 0 TO 2 PERCENT. THIS COMPONENT IS ON FLOOD PLAINS. THE PARENT MATERIAL CONSISTS OF LOAMY ALLUVIUM. DEPTH TO A ROOT RESTRICTIVE LAYER IS GREATER THAN 60 INCHES. THE NATURAL DRAINAGE CLASS IS WELL DRAINED. WATER MOVEMENT IN THE MOST RESTRICTIVE LAYER IS MODERATELY HIGH. AVAILABLE WATER TO A DEPTH OF 60 INCHES IS VERY HIGH. SHRINK-SWELL POTENTIAL IS LOW. THIS SOIL IS OCCASIONALLY FLOODED. IT IS NOT PONDED. A SEASONAL ZONE OF WATER SATURATION IS AT 60 INCHES DURING FEBRUARY, MARCH, APRIL. ORGANIC MATTER CONTENT IN THE SURFACE HORIZON IS ABOUT 4 PERCENT. NONIRRIGATED LAND CAPABILITY CLASSIFICATION IS 2W. THIS SOIL DOES NOT MEET HYDRIC CRITERIA. THE CALCIUM CARBONATE EQUIVALENT WITHIN 40 INCHES, TYPICALLY, DOES NOT EXCEED 15 PERCENT.

MAP UNIT: SB--SEBRING SILT LOAM
COMPONENT: SEBRING (90%)
THE SEBRING COMPONENT MAKES UP 90 PERCENT OF THE MAP UNIT. SLOPES ARE 0 TO 2 PERCENT. THIS COMPONENT IS ON DEPRESSIONS. THE PARENT MATERIAL CONSISTS OF GLACIOLACUSTRINE DEPOSITS. DEPTH TO A ROOT RESTRICTIVE LAYER IS GREATER THAN 60 INCHES. THE NATURAL DRAINAGE CLASS IS POORLY DRAINED. WATER MOVEMENT IN THE MOST RESTRICTIVE LAYER IS MODERATELY HIGH. AVAILABLE WATER TO A DEPTH OF 60 INCHES IS HIGH. SHRINK-SWELL POTENTIAL IS MODERATE. THIS SOIL IS NOT FLOODED. IT IS FREQUENTLY PONDED. A SEASONAL ZONE OF WATER SATURATION IS AT 6 INCHES DURING JANUARY, FEBRUARY, MARCH, APRIL, MAY, JUNE, NOVEMBER, DECEMBER. ORGANIC MATTER CONTENT IN THE SURFACE HORIZON IS ABOUT 4 PERCENT. NONIRRIGATED LAND CAPABILITY CLASSIFICATION IS 3W. THIS SOIL MEETS HYDRIC CRITERIA.

MAP UNIT: SDA--SEWARD LOAMY FINE SAND, 0 TO 2 PERCENT SLOPES
COMPONENT: SEWARD (85%)
THE SEWARD COMPONENT MAKES UP 85 PERCENT OF THE MAP UNIT. SLOPES ARE 0 TO 2 PERCENT. THIS COMPONENT IS ON DUNES ON LAKE PLAINS. THE PARENT MATERIAL CONSISTS OF GLACIOLACUSTRINE DEPOSITS OVER TILL. DEPTH TO A ROOT RESTRICTIVE LAYER IS GREATER THAN 60 INCHES. THE NATURAL DRAINAGE CLASS IS MODERATELY WELL DRAINED. WATER MOVEMENT IN THE MOST RESTRICTIVE LAYER IS LOW. AVAILABLE WATER TO A DEPTH OF 60 INCHES IS LOW. SHRINKSWELL POTENTIAL IS MODERATE. THIS SOIL IS NOT FLOODED. IT IS NOT PONDED. A SEASONAL ZONE OF WATER SATURATION IS AT 54 INCHES DURING JANUARY, FEBRUARY, MARCH, APRIL. ORGANIC MATTER CONTENT IN THE SURFACE HORIZON IS ABOUT 2 PERCENT. NONIRRIGATED LAND CAPABILITY CLASSIFICATION IS 2S. THIS SOIL DOES NOT MEET HYDRIC CRITERIA. THE CALCIUM CARBONATE EQUIVALENT WITHIN 40 INCHES, TYPICALLY, DOES NOT EXCEED 20 PERCENT.

MAP UNIT: SH--SHOALS SILT LOAM, FREQUENTLY FLOODED
COMPONENT: SHOALS (90%)
THE SHOALS COMPONENT MAKES UP 90 PERCENT OF THE MAP UNIT. SLOPES ARE 0 TO 2 PERCENT. THIS COMPONENT IS ON FLOOD PLAINS. THE PARENT MATERIAL CONSISTS OF ALLUVIUM. DEPTH TO A ROOT RESTRICTIVE LAYER IS GREATER THAN 60 INCHES. THE NATURAL DRAINAGE CLASS IS SOMEWHAT POORLY DRAINED. WATER MOVEMENT IN THE MOST RESTRICTIVE LAYER IS MODERATELY HIGH. AVAILABLE WATER TO A DEPTH OF 60 INCHES IS HIGH. SHRINK-SWELL POTENTIAL IS LOW. THIS SOIL IS FREQUENTLY FLOODED. IT IS NOT PONDED. A SEASONAL ZONE OF WATER SATURATION IS AT 24 INCHES DURING JANUARY, FEBRUARY, MARCH, APRIL. ORGANIC MATTER CONTENT IN THE SURFACE HORIZON IS ABOUT 4 PERCENT. NONIRRIGATED LAND CAPABILITY CLASSIFICATION IS 2W. THIS SOIL DOES NOT MEET HYDRIC CRITERIA. THE CALCIUM CARBONATE EQUIVALENT WITHIN 40 INCHES, TYPICALLY, DOES NOT EXCEED 1 PERCENT.

MAP UNIT: TRA--TIRO SILT LOAM, 0 TO 2 PERCENT SLOPES
COMPONENT: TIRO (90%)
THE TIRO COMPONENT MAKES UP 90 PERCENT OF THE MAP UNIT. SLOPES ARE 0 TO 2 PERCENT. THIS COMPONENT IS ON TILL PLAINS. THE PARENT MATERIAL CONSISTS OF GLACIOLACUSTRINE DEPOSITS OVER OUTWASH OVER TILL. DEPTH TO A ROOT RESTRICTIVE LAYER IS GREATER THAN 60 INCHES. THE NATURAL DRAINAGE CLASS IS SOMEWHAT POORLY DRAINED. WATER MOVEMENT IN THE MOST RESTRICTIVE LAYER IS MODERATELY LOW. AVAILABLE WATER TO A DEPTH OF 60 INCHES IS MODERATE. SHRINK-SWELL POTENTIAL IS LOW. THIS SOIL IS NOT FLOODED. IT IS NOT PONDED. A SEASONAL ZONE OF WATER SATURATION IS AT 21 INCHES DURING JANUARY, FEBRUARY, MARCH, APRIL. ORGANIC MATTER CONTENT IN THE SURFACE HORIZON IS ABOUT 2 PERCENT. NONIRRIGATED LAND CAPABILITY CLASSIFICATION IS 2W. THIS SOIL DOES NOT MEET HYDRIC CRITERIA. THE CALCIUM CARBONATE EQUIVALENT WITHIN 40 INCHES, TYPICALLY, DOES NOT EXCEED 5 PERCENT.

MAP UNIT: TRB--TIRO SILT LOAM, 2 TO 6 PERCENT SLOPES
COMPONENT: TIRO (85%)
THE TIRO COMPONENT MAKES UP 85 PERCENT OF THE MAP UNIT. SLOPES ARE 2 TO 6 PERCENT. THIS COMPONENT IS ON TILL PLAINS. THE PARENT MATERIAL CONSISTS OF GLACIOLACUSTRINE DEPOSITS OVER OUTWASH OVER TILL. DEPTH TO A ROOT RESTRICTIVE LAYER IS GREATER THAN 60 INCHES. THE NATURAL DRAINAGE CLASS IS SOMEWHAT POORLY DRAINED. WATER MOVEMENT IN THE MOST RESTRICTIVE LAYER IS MODERATELY LOW. AVAILABLE WATER TO A DEPTH OF 60 INCHES IS MODERATE. SHRINK-SWELL POTENTIAL IS LOW. THIS SOIL IS NOT FLOODED. IT IS NOT PONDED. A SEASONAL ZONE OF WATER SATURATION IS AT 21 INCHES DURING JANUARY, FEBRUARY, MARCH, APRIL. ORGANIC MATTER CONTENT IN THE SURFACE HORIZON IS ABOUT 2 PERCENT. NONIRRIGATED LAND CAPABILITY CLASSIFICATION IS 2E. THIS SOIL DOES NOT MEET HYDRIC CRITERIA. THE CALCIUM CARBONATE EQUIVALENT WITHIN 40 INCHES, TYPICALLY, DOES NOT EXCEED 5 PERCENT.

STV
Douglassville, PA Houston, TX Baltimore, MD Williamsport, PA

THE LOCATION OF THE PIPELINE FACILITIES AS SHOWN HEREON MUST BE CONSIDERED AS APPROXIMATE ONLY. BEFORE DIGGING OR FOR AN EXACT LOCATION PLEASE CONTACT YOUR STATES UNDERGROUND UTILITY LOCATION SERVICE.

| ENGINEERING RECORD | |
|---|---|
| DRAWN BY | RFT |
| CHECKED BY | CDA |
| APPROVED BY | BJB |
| DATE | XYZ |
| SCALE | AS NOTED |

OLD DRAWING NO.

| REV. | DATE | APP# | DESCRIPTION | APPROVAL |
|---|---|---|---|---|

INLAND CORPORATION

12-INCH TIFFIN JCT TO EASTON JCT
ALLEGHENY ACCESS PIPELINE PROJECT
EROSION AND SEDIMENTATION
CONTROL NOTES

SENECA, HURON, ASHLAND AND WAYNE COUNTIES, OHIO

DWG. NO. 38-15486-TE-815

REV. NO. 0

SOILS ENCOUNTERED WITHIN HURON COUNTY, OH

MAP UNIT: ADD2--ALEXANDRIA SILTY CLAY LOAM, 12 TO 18 PERCENT SLOPES, ERODED
COMPONENT: ALEXANDRIA (80%)
THE ALEXANDRIA COMPONENT MAKES UP 80 PERCENT OF THE MAP UNIT. SLOPES ARE 12 TO 18 PERCENT. THIS COMPONENT IS ON TILL PLAINS. THE PARENT MATERIAL CONSISTS OF TILL. DEPTH TO A ROOT RESTRICTIVE LAYER IS GREATER THAN 60 INCHES. THE NATURAL DRAINAGE CLASS IS WELL DRAINED. WATER MOVEMENT IN THE MOST RESTRICTIVE LAYER IS MODERATELY HIGH. AVAILABLE WATER TO A DEPTH OF 60 INCHES IS MODERATE. SHRINK-SWELL POTENTIAL IS LOW. THIS SOIL IS NOT FLOODED. IT IS NOT PONDED. A SEASONAL ZONE OF WATER SATURATION IS AT 60 INCHES DURING JANUARY, FEBRUARY, MARCH, APRIL, MAY, DECEMBER. ORGANIC MATTER CONTENT IN THE SURFACE HORIZON IS ABOUT 1 PERCENT. NONIRRIGATED LAND CAPABILITY CLASSIFICATION IS 4E. THIS SOIL DOES NOT MEET HYDRIC CRITERIA. THE CALCIUM CARBONATE EQUIVALENT WITHIN 40 INCHES, TYPICALLY, DOES NOT EXCEED 15 PERCENT.

MAP UNIT: BGA--BENNINGTON SILT LOAM, 0 TO 2 PERCENT SLOPES
COMPONENT: BENNINGTON (90%)
THE BENNINGTON COMPONENT MAKES UP 90 PERCENT OF THE MAP UNIT. SLOPES ARE 0 TO 2 PERCENT. THIS COMPONENT IS ON FLATS ON GROUND MORAINES. THE PARENT MATERIAL CONSISTS OF TILL. DEPTH TO A ROOT RESTRICTIVE LAYER IS GREATER THAN 60 INCHES. THE NATURAL DRAINAGE CLASS IS SOMEWHAT POORLY DRAINED. WATER MOVEMENT IN THE MOST RESTRICTIVE LAYER IS MODERATELY LOW. AVAILABLE WATER TO A DEPTH OF 60 INCHES IS MODERATE. SHRINK-SWELL POTENTIAL IS MODERATE. THIS SOIL IS NOT FLOODED. IT IS NOT PONDED. A SEASONAL ZONE OF WATER SATURATION IS AT 21 INCHES DURING JANUARY, FEBRUARY, MARCH, APRIL, MAY, NOVEMBER, DECEMBER. ORGANIC MATTER CONTENT IN THE SURFACE HORIZON IS ABOUT 3 PERCENT. NONIRRIGATED LAND CAPABILITY CLASSIFICATION IS 2W. THIS SOIL DOES NOT MEET HYDRIC CRITERIA. THE CALCIUM CARBONATE EQUIVALENT WITHIN 40 INCHES, TYPICALLY, DOES NOT EXCEED 3 PERCENT.

MAP UNIT: BGB--BENNINGTON SILT LOAM, 2 TO 6 PERCENT SLOPES
COMPONENT: BENNINGTON (90%)
THE BENNINGTON COMPONENT MAKES UP 90 PERCENT OF THE MAP UNIT. SLOPES ARE 2 TO 6 PERCENT. THIS COMPONENT IS ON FLATS ON GROUND MORAINES. THE PARENT MATERIAL CONSISTS OF TILL. DEPTH TO A ROOT RESTRICTIVE LAYER IS GREATER THAN 60 INCHES. THE NATURAL DRAINAGE CLASS IS SOMEWHAT POORLY DRAINED. WATER MOVEMENT IN THE MOST RESTRICTIVE LAYER IS MODERATELY LOW. AVAILABLE WATER TO A DEPTH OF 60 INCHES IS MODERATE. SHRINK-SWELL POTENTIAL IS MODERATE. THIS SOIL IS NOT FLOODED. IT IS NOT PONDED. A SEASONAL ZONE OF WATER SATURATION IS AT 21 INCHES DURING JANUARY, FEBRUARY, MARCH, APRIL, MAY, NOVEMBER, DECEMBER. ORGANIC MATTER CONTENT IN THE SURFACE HORIZON IS ABOUT 3 PERCENT. NONIRRIGATED LAND CAPABILITY CLASSIFICATION IS 2E. THIS SOIL DOES NOT MEET HYDRIC CRITERIA. THE CALCIUM CARBONATE EQUIVALENT WITHIN 40 INCHES, TYPICALLY, DOES NOT EXCEED 3 PERCENT.

MAP UNIT: BOB--BLOUNT SILT LOAM, 2 TO 6 PERCENT SLOPES
COMPONENT: BLOUNT (85%)
THE BLOUNT COMPONENT MAKES UP 85 PERCENT OF THE MAP UNIT. SLOPES ARE 2 TO 6 PERCENT. THIS COMPONENT IS ON FLATS ON GROUND MORAINES. THE PARENT MATERIAL CONSISTS OF TILL. DEPTH TO A ROOT RESTRICTIVE LAYER IS GREATER THAN 60 INCHES. THE NATURAL DRAINAGE CLASS IS SOMEWHAT POORLY DRAINED. WATER MOVEMENT IN THE MOST RESTRICTIVE LAYER IS MODERATELY LOW. AVAILABLE WATER TO A DEPTH OF 60 INCHES IS MODERATE. SHRINK-SWELL POTENTIAL IS MODERATE. THIS SOIL IS NOT FLOODED. IT IS NOT PONDED. A SEASONAL ZONE OF WATER SATURATION IS AT 24 INCHES DURING JANUARY, FEBRUARY, MARCH, APRIL, MAY. ORGANIC MATTER CONTENT IN THE SURFACE HORIZON IS ABOUT 2 PERCENT. NONIRRIGATED LAND CAPABILITY CLASSIFICATION IS 2E. THIS SOIL DOES NOT MEET HYDRIC CRITERIA. THE CALCIUM CARBONATE EQUIVALENT WITHIN 40 INCHES, TYPICALLY, DOES NOT EXCEED 18 PERCENT.

MAP UNIT: CDB--CARDINGTON SILT LOAM, 2 TO 6 PERCENT SLOPES
COMPONENT: CARDINGTON (85%)
THE CARDINGTON COMPONENT MAKES UP 85 PERCENT OF THE MAP UNIT. SLOPES ARE 2 TO 6 PERCENT. THIS COMPONENT IS ON GROUND MORAINES. THE PARENT MATERIAL CONSISTS OF TILL. DEPTH TO A ROOT RESTRICTIVE LAYER IS GREATER THAN 60 INCHES. THE NATURAL DRAINAGE CLASS IS MODERATELY WELL DRAINED. WATER MOVEMENT IN THE MOST RESTRICTIVE LAYER IS MODERATELY LOW. AVAILABLE WATER TO A DEPTH OF 60 INCHES IS MODERATE. SHRINK-SWELL POTENTIAL IS LOW. THIS SOIL IS NOT FLOODED. IT IS NOT PONDED. A SEASONAL ZONE OF WATER SATURATION IS AT 27 INCHES DURING JANUARY, FEBRUARY, MARCH, APRIL, NOVEMBER, DECEMBER. ORGANIC MATTER CONTENT IN THE SURFACE HORIZON IS ABOUT 2 PERCENT. NONIRRIGATED LAND CAPABILITY CLASSIFICATION IS 2E. THIS SOIL DOES NOT MEET HYDRIC CRITERIA. THE CALCIUM CARBONATE EQUIVALENT WITHIN 40 INCHES, TYPICALLY, DOES NOT EXCEED 14 PERCENT.

MAP UNIT: CDB2--CARDINGTON SILT LOAM, 2 TO 6 PERCENT SLOPES, ERODED
COMPONENT: CARDINGTON (95%)
THE CARDINGTON COMPONENT MAKES UP 95 PERCENT OF THE MAP UNIT. SLOPES ARE 2 TO 6 PERCENT. THIS COMPONENT IS ON GROUND MORAINES. THE PARENT MATERIAL CONSISTS OF TILL. DEPTH TO A ROOT RESTRICTIVE LAYER IS GREATER THAN 60 INCHES. THE NATURAL DRAINAGE CLASS IS MODERATELY WELL DRAINED. WATER MOVEMENT IN THE MOST RESTRICTIVE LAYER IS MODERATELY LOW. AVAILABLE WATER TO A DEPTH OF 60 INCHES IS MODERATE. SHRINK-SWELL POTENTIAL IS LOW. THIS SOIL IS NOT FLOODED. IT IS NOT PONDED. A SEASONAL ZONE OF WATER SATURATION IS AT 30 INCHES DURING JANUARY, FEBRUARY, MARCH, APRIL, MAY, NOVEMBER, DECEMBER. ORGANIC MATTER CONTENT IN THE SURFACE HORIZON IS ABOUT 2 PERCENT. NONIRRIGATED LAND CAPABILITY CLASSIFICATION IS 2E. THIS SOIL DOES NOT MEET HYDRIC CRITERIA. THE CALCIUM CARBONATE EQUIVALENT WITHIN 40 INCHES, TYPICALLY, DOES NOT EXCEED 14 PERCENT.

MAP UNIT: CDC2--CARDINGTON SILT LOAM, 6 TO 12 PERCENT SLOPES, ERODED
COMPONENT: CARDINGTON (90%)
THE CARDINGTON COMPONENT MAKES UP 90 PERCENT OF THE MAP UNIT. SLOPES ARE 6 TO 12 PERCENT. THIS COMPONENT IS ON GROUND MORAINES. THE PARENT MATERIAL CONSISTS OF TILL. DEPTH TO A ROOT RESTRICTIVE LAYER IS GREATER THAN 60 INCHES. THE NATURAL DRAINAGE CLASS IS MODERATELY WELL DRAINED. WATER MOVEMENT IN THE MOST RESTRICTIVE LAYER IS MODERATELY LOW. AVAILABLE WATER TO A DEPTH OF 60 INCHES IS MODERATE. SHRINK-SWELL POTENTIAL IS LOW. THIS SOIL IS NOT FLOODED. IT IS NOT PONDED. A SEASONAL ZONE OF WATER SATURATION IS AT 27 INCHES DURING JANUARY, FEBRUARY, MARCH, APRIL, NOVEMBER, DECEMBER. ORGANIC MATTER CONTENT IN THE SURFACE HORIZON IS ABOUT 2 PERCENT. NONIRRIGATED LAND CAPABILITY CLASSIFICATION IS 3E. THIS SOIL DOES NOT MEET HYDRIC CRITERIA. THE CALCIUM CARBONATE EQUIVALENT WITHIN 40 INCHES, TYPICALLY, DOES NOT EXCEED 14 PERCENT.

MAP UNIT: CF--CARLISLE MUCK, PONDED
COMPONENT: CARLISLE (90%)
THE CARLISLE COMPONENT MAKES UP 90 PERCENT OF THE MAP UNIT. SLOPES ARE 0 TO 2 PERCENT. THIS COMPONENT IS ON BOGS. THE PARENT MATERIAL CONSISTS OF HERBACEOUS ORGANIC MATERIAL AND/OR WOODY ORGANIC MATERIAL. DEPTH TO A ROOT RESTRICTIVE LAYER IS GREATER THAN 60 INCHES. THE NATURAL DRAINAGE CLASS IS VERY POORLY DRAINED. WATER MOVEMENT IN THE MOST RESTRICTIVE LAYER IS MODERATELY HIGH. AVAILABLE WATER TO A DEPTH OF 60 INCHES IS VERY HIGH. SHRINK-SWELL POTENTIAL IS LOW. THIS SOIL IS NOT FLOODED. IT IS FREQUENTLY PONDED. A SEASONAL ZONE OF WATER SATURATION IS AT 6 INCHES DURING JANUARY, FEBRUARY, MARCH, APRIL, MAY, SEPTEMBER, OCTOBER, NOVEMBER, DECEMBER. ORGANIC MATTER CONTENT IN THE SURFACE HORIZON IS ABOUT 84 PERCENT. NONIRRIGATED LAND CAPABILITY CLASSIFICATION IS 5W. THIS SOIL MEETS HYDRIC CRITERIA.

MAP UNIT: CHB--CHILI LOAM, LOAMY SUBSTRATUM, 2 TO 6 PERCENT SLOPES
COMPONENT: CHILI (85%)
THE CHILI COMPONENT MAKES UP 85 PERCENT OF THE MAP UNIT. SLOPES ARE 2 TO 6 PERCENT. THIS COMPONENT IS ON TERRACES. THE PARENT MATERIAL CONSISTS OF OUTWASH. DEPTH TO A ROOT RESTRICTIVE LAYER IS GREATER THAN 60 INCHES. THE NATURAL DRAINAGE CLASS IS WELL DRAINED. WATER MOVEMENT IN THE MOST RESTRICTIVE LAYER IS MODERATELY HIGH. AVAILABLE WATER TO A DEPTH OF 60 INCHES IS MODERATE. SHRINK-SWELL POTENTIAL IS LOW. THIS SOIL IS NOT FLOODED. IT IS NOT PONDED. THERE IS NO ZONE OF WATER SATURATION WITHIN A DEPTH OF 72 INCHES. ORGANIC MATTER CONTENT IN THE SURFACE HORIZON IS ABOUT 2 PERCENT. NONIRRIGATED LAND CAPABILITY CLASSIFICATION IS 2E. THIS SOIL DOES NOT MEET HYDRIC CRITERIA.

MAP UNIT: CHC--CHILI LOAM, LOAMY SUBSTRATUM, 6 TO 12 PERCENT SLOPES
COMPONENT: CHILI (85%)
THE CHILI COMPONENT MAKES UP 85 PERCENT OF THE MAP UNIT. SLOPES ARE 6 TO 12 PERCENT. THIS COMPONENT IS ON TERRACES. THE PARENT MATERIAL CONSISTS OF OUTWASH. DEPTH TO A ROOT RESTRICTIVE LAYER IS GREATER THAN 60 INCHES. THE NATURAL DRAINAGE CLASS IS WELL DRAINED. WATER MOVEMENT IN THE MOST RESTRICTIVE LAYER IS MODERATELY HIGH. AVAILABLE WATER TO A DEPTH OF 60 INCHES IS MODERATE. SHRINK-SWELL POTENTIAL IS LOW. THIS SOIL IS NOT FLOODED. IT IS NOT PONDED. THERE IS NO ZONE OF WATER SATURATION WITHIN A DEPTH OF 72 INCHES. ORGANIC MATTER CONTENT IN THE SURFACE HORIZON IS ABOUT 2 PERCENT. NONIRRIGATED LAND CAPABILITY CLASSIFICATION IS 3E. THIS SOIL DOES NOT MEET HYDRIC CRITERIA.

MAP UNIT: CM--COLWOOD SILT LOAM
COMPONENT: COLWOOD (90%)
THE COLWOOD COMPONENT MAKES UP 90 PERCENT OF THE MAP UNIT. SLOPES ARE 0 TO 2 PERCENT. THIS COMPONENT IS ON FLATS. THE PARENT MATERIAL CONSISTS OF GLACIOLACUSTRINE DEPOSITS. DEPTH TO A ROOT RESTRICTIVE LAYER IS GREATER THAN 60 INCHES. THE NATURAL DRAINAGE CLASS IS VERY POORLY DRAINED. WATER MOVEMENT IN THE MOST RESTRICTIVE LAYER IS MODERATELY HIGH. AVAILABLE WATER TO A DEPTH OF 60 INCHES IS HIGH. SHRINK-SWELL POTENTIAL IS LOW. THIS SOIL IS NOT FLOODED. IT IS FREQUENTLY PONDED. A SEASONAL ZONE OF WATER SATURATION IS AT 6 INCHES DURING JANUARY, FEBRUARY, MARCH, APRIL, MAY, OCTOBER, NOVEMBER, DECEMBER. ORGANIC MATTER CONTENT IN THE SURFACE HORIZON IS ABOUT 6 PERCENT. NONIRRIGATED LAND CAPABILITY CLASSIFICATION IS 2W. THIS SOIL MEETS HYDRIC CRITERIA. THE CALCIUM CARBONATE EQUIVALENT WITHIN 40 INCHES, TYPICALLY, DOES NOT EXCEED 12 PERCENT.

MAP UNIT: CO--CONDIT SILTY CLAY LOAM
COMPONENT: CONDIT (90%)
THE CONDIT COMPONENT MAKES UP 90 PERCENT OF THE MAP UNIT. SLOPES ARE 0 TO 2 PERCENT. THIS COMPONENT IS ON -- ERROR IN EXISTS ON --. THE PARENT MATERIAL CONSISTS OF TILL. DEPTH TO A ROOT RESTRICTIVE LAYER IS GREATER THAN 60 INCHES. THE NATURAL DRAINAGE CLASS IS POORLY DRAINED. WATER MOVEMENT IN THE MOST RESTRICTIVE LAYER IS MODERATELY LOW. AVAILABLE WATER TO A DEPTH OF 60 INCHES IS MODERATE. SHRINK-SWELL POTENTIAL IS MODERATE. THIS SOIL IS NOT FLOODED. IT IS FREQUENTLY PONDED. A SEASONAL ZONE OF WATER SATURATION IS AT 6 INCHES DURING JANUARY, FEBRUARY, MARCH, APRIL, MAY, JUNE, JULY, NOVEMBER, DECEMBER. ORGANIC MATTER CONTENT IN THE SURFACE HORIZON IS ABOUT 3 PERCENT. NONIRRIGATED LAND CAPABILITY CLASSIFICATION IS 3W. THIS SOIL MEETS HYDRIC CRITERIA. THE CALCIUM CARBONATE EQUIVALENT WITHIN 40 INCHES, TYPICALLY, DOES NOT EXCEED 3 PERCENT.

MAP UNIT: HKA--HASKINS LOAM, 0 TO 3 PERCENT SLOPES
COMPONENT: HASKINS (80%)
THE HASKINS COMPONENT MAKES UP 80 PERCENT OF THE MAP UNIT. SLOPES ARE 0 TO 3 PERCENT. THIS COMPONENT IS ON LAKE PLAINS. THE PARENT MATERIAL CONSISTS OF GLACIOLACUSTRINE DEPOSITS OVER TILL. DEPTH TO A ROOT RESTRICTIVE LAYER IS GREATER THAN 60 INCHES. THE NATURAL DRAINAGE CLASS IS SOMEWHAT POORLY DRAINED. WATER MOVEMENT IN THE MOST RESTRICTIVE LAYER IS MODERATELY LOW. AVAILABLE WATER TO A DEPTH OF 60 INCHES IS MODERATE. SHRINK-SWELL POTENTIAL IS MODERATE. THIS SOIL IS NOT FLOODED. IT IS NOT PONDED. A SEASONAL ZONE OF WATER SATURATION IS AT 21 INCHES DURING JANUARY, FEBRUARY, MARCH, APRIL. ORGANIC MATTER CONTENT IN THE SURFACE HORIZON IS ABOUT 2 PERCENT. NONIRRIGATED LAND CAPABILITY CLASSIFICATION IS 2W. THIS SOIL DOES NOT MEET HYDRIC CRITERIA. THE CALCIUM CARBONATE EQUIVALENT WITHIN 40 INCHES, TYPICALLY, DOES NOT EXCEED 15 PERCENT.

MAP UNIT: JTA--JIMTOWN LOAM, 0 TO 3 PERCENT SLOPES
COMPONENT: JIMTOWN (80%)
THE JIMTOWN COMPONENT MAKES UP 80 PERCENT OF THE MAP UNIT. SLOPES ARE 0 TO 3 PERCENT. THIS COMPONENT IS ON TERRACES. THE PARENT MATERIAL CONSISTS OF OUTWASH. DEPTH TO A ROOT RESTRICTIVE LAYER IS GREATER THAN 60 INCHES. THE NATURAL DRAINAGE CLASS IS SOMEWHAT POORLY DRAINED. WATER MOVEMENT IN THE MOST RESTRICTIVE LAYER IS MODERATELY HIGH. AVAILABLE WATER TO A DEPTH OF 60 INCHES IS MODERATE. SHRINK-SWELL POTENTIAL IS LOW. THIS SOIL IS NOT FLOODED. IT IS NOT PONDED. A SEASONAL ZONE OF WATER SATURATION IS AT 21 INCHES DURING JANUARY, FEBRUARY, MARCH, APRIL, MAY, DECEMBER. ORGANIC MATTER CONTENT IN THE SURFACE HORIZON IS ABOUT 2 PERCENT. NONIRRIGATED LAND CAPABILITY CLASSIFICATION IS 2W. THIS SOIL DOES NOT MEET HYDRIC CRITERIA.

MAP UNIT: LO--LOBDELL SILT LOAM, FREQUENTLY FLOODED
COMPONENT: LOBDELL (80%)
THE LOBDELL COMPONENT MAKES UP 80 PERCENT OF THE MAP UNIT. SLOPES ARE 0 TO 2 PERCENT. THIS COMPONENT IS ON FLOOD PLAINS. THE PARENT MATERIAL CONSISTS OF ALLUVIUM. DEPTH TO A ROOT RESTRICTIVE LAYER IS GREATER THAN 60 INCHES. THE NATURAL DRAINAGE CLASS IS MODERATELY WELL DRAINED. WATER MOVEMENT IN THE MOST RESTRICTIVE LAYER IS MODERATELY HIGH. AVAILABLE WATER TO A DEPTH OF 60 INCHES IS HIGH. SHRINK-SWELL POTENTIAL IS LOW. THIS SOIL IS FREQUENTLY FLOODED. IT IS NOT PONDED. A SEASONAL ZONE OF WATER SATURATION IS AT 33 INCHES DURING JANUARY, FEBRUARY, MARCH, APRIL, DECEMBER. ORGANIC MATTER CONTENT IN THE SURFACE HORIZON IS ABOUT 2 PERCENT. NONIRRIGATED LAND CAPABILITY CLASSIFICATION IS 2W. THIS SOIL DOES NOT MEET HYDRIC CRITERIA.

MAP UNIT: OR--ORRVILLE SILT LOAM, FREQUENTLY FLOODED
COMPONENT: ORRVILLE (90%)
THE ORRVILLE COMPONENT MAKES UP 90 PERCENT OF THE MAP UNIT. SLOPES ARE 0 TO 2 PERCENT. THIS COMPONENT IS ON FLOOD PLAINS. THE PARENT MATERIAL CONSISTS OF ALLUVIUM. DEPTH TO A ROOT RESTRICTIVE LAYER IS GREATER THAN 60 INCHES. THE NATURAL DRAINAGE CLASS IS SOMEWHAT POORLY DRAINED. WATER MOVEMENT IN THE MOST RESTRICTIVE LAYER IS MODERATELY HIGH. AVAILABLE WATER TO A DEPTH OF 60 INCHES IS HIGH. SHRINK-SWELL POTENTIAL IS LOW. THIS SOIL IS FREQUENTLY FLOODED. IT IS NOT PONDED. A SEASONAL ZONE OF WATER SATURATION IS AT 21 INCHES DURING JANUARY, FEBRUARY, MARCH, APRIL, MAY, JUNE, NOVEMBER, DECEMBER. ORGANIC MATTER CONTENT IN THE SURFACE HORIZON IS ABOUT 3 PERCENT. NONIRRIGATED LAND CAPABILITY CLASSIFICATION IS 2W. THIS SOIL DOES NOT MEET HYDRIC CRITERIA.

MAP UNIT: PA--PANDORA SILTY CLAY LOAM
COMPONENT: PANDORA (85%)
THE PANDORA COMPONENT MAKES UP 85 PERCENT OF THE MAP UNIT. SLOPES ARE 0 TO 2 PERCENT. THIS COMPONENT IS ON DEPRESSIONS. THE PARENT MATERIAL CONSISTS OF TILL. DEPTH TO A ROOT RESTRICTIVE LAYER IS GREATER THAN 60 INCHES. THE NATURAL DRAINAGE CLASS IS POORLY DRAINED. WATER MOVEMENT IN THE MOST RESTRICTIVE LAYER IS MODERATELY LOW. AVAILABLE WATER TO A DEPTH OF 60 INCHES IS MODERATE. SHRINK-SWELL POTENTIAL IS MODERATE. THIS SOIL IS NOT FLOODED. IT IS FREQUENTLY PONDED. A SEASONAL ZONE OF WATER SATURATION IS AT 6 INCHES DURING JANUARY, FEBRUARY, MARCH, APRIL, MAY, DECEMBER. ORGANIC MATTER CONTENT IN THE SURFACE HORIZON IS ABOUT 4 PERCENT. NONIRRIGATED LAND CAPABILITY CLASSIFICATION IS 2W. THIS SOIL MEETS HYDRIC CRITERIA. THE CALCIUM CARBONATE EQUIVALENT WITHIN 40 INCHES, TYPICALLY, DOES NOT EXCEED 5 PERCENT.

MAP UNIT: PM--PEWAMO SILTY CLAY LOAM
COMPONENT: PEWAMO (90%)
THE PEWAMO COMPONENT MAKES UP 90 PERCENT OF THE MAP UNIT. SLOPES ARE 0 TO 2 PERCENT. THIS COMPONENT IS ON FLATS. THE PARENT MATERIAL CONSISTS OF TILL. DEPTH TO A ROOT RESTRICTIVE LAYER IS GREATER THAN 60 INCHES. THE NATURAL DRAINAGE CLASS IS VERY POORLY DRAINED. WATER MOVEMENT IN THE MOST RESTRICTIVE LAYER IS MODERATELY HIGH. AVAILABLE WATER TO A DEPTH OF 60 INCHES IS HIGH. SHRINK-SWELL POTENTIAL IS MODERATE. THIS SOIL IS NOT FLOODED. IT IS FREQUENTLY PONDED. A SEASONAL ZONE OF WATER SATURATION IS AT 6 INCHES DURING JANUARY, FEBRUARY, MARCH, APRIL, MAY, DECEMBER. ORGANIC MATTER CONTENT IN THE SURFACE HORIZON IS ABOUT 8 PERCENT. NONIRRIGATED LAND CAPABILITY CLASSIFICATION IS 2W. THIS SOIL MEETS HYDRIC CRITERIA. THE CALCIUM CARBONATE EQUIVALENT WITHIN 40 INCHES, TYPICALLY, DOES NOT EXCEED 3 PERCENT.

MAP UNIT: TG--TIOGA LOAM, OCCASIONALLY FLOODED
COMPONENT: TIOGA (80%)
THE TIOGA COMPONENT MAKES UP 80 PERCENT OF THE MAP UNIT. SLOPES ARE 0 TO 2 PERCENT. THIS COMPONENT IS ON FLOOD PLAINS. THE PARENT MATERIAL CONSISTS OF ALLUVIUM. DEPTH TO A ROOT RESTRICTIVE LAYER IS GREATER THAN 60 INCHES. THE NATURAL DRAINAGE CLASS IS WELL DRAINED. WATER MOVEMENT IN THE MOST RESTRICTIVE LAYER IS MODERATELY HIGH. AVAILABLE WATER TO A DEPTH OF 60 INCHES IS MODERATE. SHRINK-SWELL POTENTIAL IS LOW. THIS SOIL IS OCCASIONALLY FLOODED. IT IS NOT PONDED. A SEASONAL ZONE OF WATER SATURATION IS AT 54 INCHES DURING FEBRUARY, MARCH, APRIL. ORGANIC MATTER CONTENT IN THE SURFACE HORIZON IS ABOUT 4 PERCENT. NONIRRIGATED LAND CAPABILITY CLASSIFICATION IS 1. THIS SOIL DOES NOT MEET HYDRIC CRITERIA. THE CALCIUM CARBONATE EQUIVALENT WITHIN 40 INCHES, TYPICALLY, DOES NOT EXCEED 3 PERCENT.

MAP UNIT: TUA--TUSCOLA FINE SANDY LOAM, 0 TO 2 PERCENT SLOPES
COMPONENT: TUSCOLA (90%)
THE TUSCOLA COMPONENT MAKES UP 90 PERCENT OF THE MAP UNIT. SLOPES ARE 0 TO 2 PERCENT. THIS COMPONENT IS ON LAKE PLAINS. THE PARENT MATERIAL CONSISTS OF GLACIOLACUSTRINE DEPOSITS. DEPTH TO A ROOT RESTRICTIVE LAYER IS GREATER THAN 60 INCHES. THE NATURAL DRAINAGE CLASS IS MODERATELY WELL DRAINED. WATER MOVEMENT IN THE MOST RESTRICTIVE LAYER IS MODERATELY HIGH. AVAILABLE WATER TO A DEPTH OF 60 INCHES IS HIGH. SHRINK-SWELL POTENTIAL IS MODERATE. THIS SOIL IS NOT FLOODED. IT IS NOT PONDED. A SEASONAL ZONE OF WATER SATURATION IS AT 33 INCHES DURING JANUARY, FEBRUARY, MARCH, APRIL, NOVEMBER, DECEMBER. ORGANIC MATTER CONTENT IN THE SURFACE HORIZON IS ABOUT 2 PERCENT. NONIRRIGATED LAND CAPABILITY CLASSIFICATION IS 1. THIS SOIL DOES NOT MEET HYDRIC CRITERIA. THE CALCIUM CARBONATE EQUIVALENT WITHIN 40 INCHES, TYPICALLY, DOES NOT EXCEED 5 PERCENT.

MAP UNIT: TUB--TUSCOLA FINE SANDY LOAM, 2 TO 6 PERCENT SLOPES
COMPONENT: TUSCOLA (85%)
THE TUSCOLA COMPONENT MAKES UP 85 PERCENT OF THE MAP UNIT. SLOPES ARE 2 TO 6 PERCENT. THIS COMPONENT IS ON LAKE PLAINS. THE PARENT MATERIAL CONSISTS OF GLACIOLACUSTRINE DEPOSITS. DEPTH TO A ROOT RESTRICTIVE LAYER IS GREATER THAN 60 INCHES. THE NATURAL DRAINAGE CLASS IS MODERATELY WELL DRAINED. WATER MOVEMENT IN THE MOST RESTRICTIVE LAYER IS MODERATELY HIGH. AVAILABLE WATER TO A DEPTH OF 60 INCHES IS HIGH. SHRINK-SWELL POTENTIAL IS MODERATE. THIS SOIL IS NOT FLOODED. IT IS NOT PONDED. A SEASONAL ZONE OF WATER SATURATION IS AT 33 INCHES DURING JANUARY, FEBRUARY, MARCH, APRIL, NOVEMBER, DECEMBER. ORGANIC MATTER CONTENT IN THE SURFACE HORIZON IS ABOUT 2 PERCENT. NONIRRIGATED LAND CAPABILITY CLASSIFICATION IS 2E. THIS SOIL DOES NOT MEET HYDRIC CRITERIA. THE CALCIUM CARBONATE EQUIVALENT WITHIN 40 INCHES, TYPICALLY, DOES NOT EXCEED 5 PERCENT.

| REV. | DATE | APP# | DESCRIPTION | APPROVAL |
|---|---|---|---|---|

STV
Douglassville, PA Houston, TX Baltimore, MD Williamsport, PA

THE LOCATION OF THE PIPELINE FACILITIES AS SHOWN HEREON MUST BE CONSIDERED AS APPROXIMATE ONLY. BEFORE DIGGING OR FOR AN EXACT LOCATION PLEASE CONTACT YOUR STATES UNDERGROUND UTILITY LOCATION SERVICE.

ENGINEERING RECORD

| | |
|---|---|
| DRAWN BY | RFT |
| CHECKED BY | CDA |
| APPROVED BY | BJB |
| DATE | XYZ |
| SCALE | AS NOTED |

INLAND CORPORATION

12-INCH TIFFIN JCT TO EASTON JCT
ALLEGHENY ACCESS PIPELINE PROJECT
EROSION AND SEDIMENTATION CONTROL NOTES

SENECA, HURON, ASHLAND AND WAYNE COUNTIES, OHIO

OLD DRAWING NO.

DWG. NO. 38-15486-TE-816

REV. NO. 0

SOILS ENCOUNTERED WITHIN ASHLAND COUNTY, OH

MAP UNIT: ADD2--ALEXANDRIA SILT LOAM, 12 TO 18 PERCENT SLOPES, ERODED
COMPONENT: ALEXANDRIA (100%)
THE ALEXANDRIA COMPONENT MAKES UP 100 PERCENT OF THE MAP UNIT. SLOPES ARE 12 TO 18 PERCENT. THIS COMPONENT IS ON TILL PLAINS. THE PARENT MATERIAL CONSISTS OF LOAMY TILL. DEPTH TO A ROOT RESTRICTIVE LAYER IS GREATER THAN 60 INCHES. THE NATURAL DRAINAGE CLASS IS WELL DRAINED. WATER MOVEMENT IN THE MOST RESTRICTIVE LAYER IS MODERATELY HIGH. AVAILABLE WATER TO A DEPTH OF 60 INCHES IS MODERATE. SHRINK-SWELL POTENTIAL IS MODERATE. THIS SOIL IS NOT FLOODED. IT IS NOT PONDED. THERE IS NO ZONE OF WATER SATURATION WITHIN A DEPTH OF 72 INCHES. ORGANIC MATTER CONTENT IN THE SURFACE HORIZON IS ABOUT 2 PERCENT. NONIRRIGATED LAND CAPABILITY CLASSIFICATION IS 4E. THIS SOIL DOES NOT MEET HYDRIC CRITERIA.

MAP UNIT: ADE--ALEXANDRIA SILT LOAM, 18 TO 25 PERCENT SLOPES
COMPONENT: ALEXANDRIA (100%)
THE ALEXANDRIA COMPONENT MAKES UP 100 PERCENT OF THE MAP UNIT. SLOPES ARE 18 TO 25 PERCENT. THIS COMPONENT IS ON TILL PLAINS. THE PARENT MATERIAL CONSISTS OF LOAMY TILL. DEPTH TO A ROOT RESTRICTIVE LAYER IS GREATER THAN 60 INCHES. THE NATURAL DRAINAGE CLASS IS WELL DRAINED. WATER MOVEMENT IN THE MOST RESTRICTIVE LAYER IS MODERATELY HIGH. AVAILABLE WATER TO A DEPTH OF 60 INCHES IS MODERATE. SHRINK-SWELL POTENTIAL IS MODERATE. THIS SOIL IS NOT FLOODED. IT IS NOT PONDED. THERE IS NO ZONE OF WATER SATURATION WITHIN A DEPTH OF 72 INCHES. ORGANIC MATTER CONTENT IN THE SURFACE HORIZON IS ABOUT 2 PERCENT. NONIRRIGATED LAND CAPABILITY CLASSIFICATION IS 6E. THIS SOIL DOES NOT MEET HYDRIC CRITERIA.

MAP UNIT: ADF--ALEXANDRIA SILT LOAM, 25 TO 50 PERCENT SLOPES
COMPONENT: ALEXANDRIA (100%)
THE ALEXANDRIA COMPONENT MAKES UP 100 PERCENT OF THE MAP UNIT. SLOPES ARE 25 TO 50 PERCENT. THIS COMPONENT IS ON TILL PLAINS. THE PARENT MATERIAL CONSISTS OF LOAMY TILL. DEPTH TO A ROOT RESTRICTIVE LAYER IS GREATER THAN 60 INCHES. THE NATURAL DRAINAGE CLASS IS WELL DRAINED. WATER MOVEMENT IN THE MOST RESTRICTIVE LAYER IS MODERATELY HIGH. AVAILABLE WATER TO A DEPTH OF 60 INCHES IS MODERATE. SHRINK-SWELL POTENTIAL IS MODERATE. THIS SOIL IS NOT FLOODED. IT IS NOT PONDED. THERE IS NO ZONE OF WATER SATURATION WITHIN A DEPTH OF 72 INCHES. ORGANIC MATTER CONTENT IN THE SURFACE HORIZON IS ABOUT 2 PERCENT. NONIRRIGATED LAND CAPABILITY CLASSIFICATION IS 7E. THIS SOIL DOES NOT MEET HYDRIC CRITERIA.

MAP UNIT: BNA--BENNINGTON SILT LOAM, 0 TO 2 PERCENT SLOPES
COMPONENT: BENNINGTON (90%)
THE BENNINGTON COMPONENT MAKES UP 90 PERCENT OF THE MAP UNIT. SLOPES ARE 0 TO 2 PERCENT. THIS COMPONENT IS ON FLATS ON GROUND MORAINES. THE PARENT MATERIAL CONSISTS OF TILL. DEPTH TO A ROOT RESTRICTIVE LAYER IS GREATER THAN 60 INCHES. THE NATURAL DRAINAGE CLASS IS SOMEWHAT POORLY DRAINED. WATER MOVEMENT IN THE MOST RESTRICTIVE LAYER IS MODERATELY LOW. AVAILABLE WATER TO A DEPTH OF 60 INCHES IS MODERATE. SHRINK-SWELL POTENTIAL IS MODERATE. THIS SOIL IS NOT FLOODED. IT IS NOT PONDED. A SEASONAL ZONE OF WATER SATURATION IS AT 12 INCHES DURING JANUARY, FEBRUARY, MARCH, APRIL, MAY, NOVEMBER, DECEMBER. ORGANIC MATTER CONTENT IN THE SURFACE HORIZON IS ABOUT 3 PERCENT. NONIRRIGATED LAND CAPABILITY CLASSIFICATION IS 2W. THIS SOIL DOES NOT MEET HYDRIC CRITERIA. THE CALCIUM CARBONATE EQUIVALENT WITHIN 40 INCHES, TYPICALLY, DOES NOT EXCEED 5 PERCENT.

MAP UNIT: BNB--BENNINGTON SILT LOAM, 2 TO 6 PERCENT SLOPES
COMPONENT: BENNINGTON (90%)
THE BENNINGTON COMPONENT MAKES UP 90 PERCENT OF THE MAP UNIT. SLOPES ARE 2 TO 6 PERCENT. THIS COMPONENT IS ON FLATS ON GROUND MORAINES. THE PARENT MATERIAL CONSISTS OF TILL. DEPTH TO A ROOT RESTRICTIVE LAYER IS GREATER THAN 60 INCHES. THE NATURAL DRAINAGE CLASS IS SOMEWHAT POORLY DRAINED. WATER MOVEMENT IN THE MOST RESTRICTIVE LAYER IS MODERATELY LOW. AVAILABLE WATER TO A DEPTH OF 60 INCHES IS MODERATE. SHRINK-SWELL POTENTIAL IS MODERATE. THIS SOIL IS NOT FLOODED. IT IS NOT PONDED. A SEASONAL ZONE OF WATER SATURATION IS AT 12 INCHES DURING JANUARY, FEBRUARY, MARCH, APRIL, MAY, NOVEMBER, DECEMBER. ORGANIC MATTER CONTENT IN THE SURFACE HORIZON IS ABOUT 3 PERCENT. NONIRRIGATED LAND CAPABILITY CLASSIFICATION IS 2E. THIS SOIL DOES NOT MEET HYDRIC CRITERIA. THE CALCIUM CARBONATE EQUIVALENT WITHIN 40 INCHES, TYPICALLY, DOES NOT EXCEED 5 PERCENT.

MAP UNIT: BTB--BOGART GRAVELLY LOAM, 2 TO 6 PERCENT SLOPES
COMPONENT: BOGART (100%)
THE BOGART COMPONENT MAKES UP 100 PERCENT OF THE MAP UNIT. SLOPES ARE 2 TO 6 PERCENT. THIS COMPONENT IS ON TERRACES. THE PARENT MATERIAL CONSISTS OF OUTWASH. DEPTH TO A ROOT RESTRICTIVE LAYER IS GREATER THAN 60 INCHES. THE NATURAL DRAINAGE CLASS IS MODERATELY WELL DRAINED. WATER MOVEMENT IN THE MOST RESTRICTIVE LAYER IS MODERATELY HIGH. AVAILABLE WATER TO A DEPTH OF 60 INCHES IS MODERATE. SHRINK-SWELL POTENTIAL IS LOW. THIS SOIL IS NOT FLOODED. IT IS NOT PONDED. A SEASONAL ZONE OF WATER SATURATION IS AT 24 INCHES DURING JANUARY, FEBRUARY, MARCH, APRIL, MAY, NOVEMBER, DECEMBER. ORGANIC MATTER CONTENT IN THE SURFACE HORIZON IS ABOUT 2 PERCENT. NONIRRIGATED LAND CAPABILITY CLASSIFICATION IS 2E. THIS SOIL DOES NOT MEET HYDRIC CRITERIA.

MAP UNIT: BVA--BOGART SILT LOAM, 0 TO 2 PERCENT SLOPES
COMPONENT: BOGART (100%)
THE BOGART COMPONENT MAKES UP 100 PERCENT OF THE MAP UNIT. SLOPES ARE 0 TO 2 PERCENT. THIS COMPONENT IS ON TERRACES. THE PARENT MATERIAL CONSISTS OF OUTWASH. DEPTH TO A ROOT RESTRICTIVE LAYER IS GREATER THAN 60 INCHES. THE NATURAL DRAINAGE CLASS IS MODERATELY WELL DRAINED. WATER MOVEMENT IN THE MOST RESTRICTIVE LAYER IS MODERATELY HIGH. AVAILABLE WATER TO A DEPTH OF 60 INCHES IS MODERATE. SHRINK-SWELL POTENTIAL IS LOW. THIS SOIL IS NOT FLOODED. IT IS NOT PONDED. A SEASONAL ZONE OF WATER SATURATION IS AT 24 INCHES DURING JANUARY, FEBRUARY, MARCH, APRIL, MAY, NOVEMBER, DECEMBER. ORGANIC MATTER CONTENT IN THE SURFACE HORIZON IS ABOUT 2 PERCENT. NONIRRIGATED LAND CAPABILITY CLASSIFICATION IS 1. THIS SOIL DOES NOT MEET HYDRIC CRITERIA.

MAP UNIT: CDB--CARDINGTON SILT LOAM, 2 TO 6 PERCENT SLOPES
COMPONENT: CARDINGTON (95%)
THE CARDINGTON COMPONENT MAKES UP 95 PERCENT OF THE MAP UNIT. SLOPES ARE 2 TO 6 PERCENT. THIS COMPONENT IS ON GROUND MORAINES. THE PARENT MATERIAL CONSISTS OF TILL. DEPTH TO A ROOT RESTRICTIVE LAYER IS GREATER THAN 60 INCHES. THE NATURAL DRAINAGE CLASS IS MODERATELY WELL DRAINED. WATER MOVEMENT IN THE MOST RESTRICTIVE LAYER IS MODERATELY LOW. AVAILABLE WATER TO A DEPTH OF 60 INCHES IS MODERATE. SHRINK-SWELL POTENTIAL IS LOW. THIS SOIL IS NOT FLOODED. IT IS NOT PONDED. A SEASONAL ZONE OF WATER SATURATION IS AT 30 INCHES DURING JANUARY, FEBRUARY, MARCH, APRIL, MAY, NOVEMBER, DECEMBER. ORGANIC MATTER CONTENT IN THE SURFACE HORIZON IS ABOUT 2 PERCENT. NONIRRIGATED LAND CAPABILITY CLASSIFICATION IS 2E. THIS SOIL DOES NOT MEET HYDRIC CRITERIA. THE CALCIUM CARBONATE EQUIVALENT WITHIN 40 INCHES, TYPICALLY, DOES NOT EXCEED 14 PERCENT.

MAP UNIT: CDC--CARDINGTON SILT LOAM, 6 TO 12 PERCENT SLOPES
COMPONENT: CARDINGTON (95%)
THE CARDINGTON COMPONENT MAKES UP 95 PERCENT OF THE MAP UNIT. SLOPES ARE 6 TO 12 PERCENT. THIS COMPONENT IS ON GROUND MORAINES. THE PARENT MATERIAL CONSISTS OF TILL. DEPTH TO A ROOT RESTRICTIVE LAYER IS GREATER THAN 60 INCHES. THE NATURAL DRAINAGE CLASS IS MODERATELY WELL DRAINED. WATER MOVEMENT IN THE MOST RESTRICTIVE LAYER IS MODERATELY LOW. AVAILABLE WATER TO A DEPTH OF 60 INCHES IS MODERATE. SHRINK-SWELL POTENTIAL IS LOW. THIS SOIL IS NOT FLOODED. IT IS NOT PONDED. A SEASONAL ZONE OF WATER SATURATION IS AT 30 INCHES DURING JANUARY, FEBRUARY, MARCH, APRIL, MAY, NOVEMBER, DECEMBER. ORGANIC MATTER CONTENT IN THE SURFACE HORIZON IS ABOUT 2 PERCENT. NONIRRIGATED LAND CAPABILITY CLASSIFICATION IS 3E. THIS SOIL DOES NOT MEET HYDRIC CRITERIA. THE CALCIUM CARBONATE EQUIVALENT WITHIN 40 INCHES, TYPICALLY, DOES NOT EXCEED 14 PERCENT.

MAP UNIT: CDC2--CARDINGTON SILT LOAM, 6 TO 12 PERCENT SLOPES, ERODED
COMPONENT: CARDINGTON (95%)
THE CARDINGTON COMPONENT MAKES UP 95 PERCENT OF THE MAP UNIT. SLOPES ARE 6 TO 12 PERCENT. THIS COMPONENT IS ON GROUND MORAINES. THE PARENT MATERIAL CONSISTS OF TILL. DEPTH TO A ROOT RESTRICTIVE LAYER IS GREATER THAN 60 INCHES. THE NATURAL DRAINAGE CLASS IS MODERATELY WELL DRAINED. WATER MOVEMENT IN THE MOST RESTRICTIVE LAYER IS MODERATELY LOW. AVAILABLE WATER TO A DEPTH OF 60 INCHES IS MODERATE. SHRINK-SWELL POTENTIAL IS LOW. THIS SOIL IS NOT FLOODED. IT IS NOT PONDED. A SEASONAL ZONE OF WATER SATURATION IS AT 30 INCHES DURING JANUARY, FEBRUARY, MARCH, APRIL, MAY, NOVEMBER, DECEMBER. ORGANIC MATTER CONTENT IN THE SURFACE HORIZON IS ABOUT 2 PERCENT. NONIRRIGATED LAND CAPABILITY CLASSIFICATION IS 3E. THIS SOIL DOES NOT MEET HYDRIC CRITERIA. THE CALCIUM CARBONATE EQUIVALENT WITHIN 40 INCHES, TYPICALLY, DOES NOT EXCEED 14 PERCENT.

MAP UNIT: CEC3--CARDINGTON SILTY CLAY LOAM, 6 TO 12 PERCENT SLOPES, SEVERELY ERODED
COMPONENT: CARDINGTON (100%)
THE CARDINGTON COMPONENT MAKES UP 100 PERCENT OF THE MAP UNIT. SLOPES ARE 6 TO 12 PERCENT. THIS COMPONENT IS ON GROUND MORAINES. THE PARENT MATERIAL CONSISTS OF TILL.DEPTH TO A ROOT RESTRICTIVE LAYER IS GREATER THAN 60 INCHES. THE NATURAL DRAINAGE CLASS IS MODERATELY WELL DRAINED. WATER MOVEMENT IN THE MOST RESTRICTIVE LAYER IS MODERATELY LOW. AVAILABLE WATER TO A DEPTH OF 60 INCHES IS MODERATE. SHRINK-SWELL POTENTIAL IS LOW. THIS SOIL IS NOT FLOODED. IT IS NOT PONDED. A SEASONAL ZONE OF WATER SATURATION IS AT 30 INCHES DURING JANUARY, FEBRUARY, MARCH, APRIL, MAY, NOVEMBER, DECEMBER. ORGANIC MATTER CONTENT IN THE SURFACE HORIZON IS ABOUT 1 PERCENT. NONIRRIGATED LAND CAPABILITY CLASSIFICATION IS 4E. THIS SOIL DOES NOT MEET HYDRIC CRITERIA. THE CALCIUM CARBONATE EQUIVALENT WITHIN 40 INCHES, TYPICALLY, DOES NOT EXCEED 14 PERCENT.

MAP UNIT: CN--CONDIT SILTY CLAY LOAM
COMPONENT: CONDIT (90%)
THE CONDIT COMPONENT MAKES UP 90 PERCENT OF THE MAP UNIT. SLOPES ARE 0 TO 2 PERCENT. THIS COMPONENT IS ON -- ERROR IN EXISTS ON --. THE PARENT MATERIAL CONSISTS OF TILL. DEPTH TO A ROOT RESTRICTIVE LAYER IS GREATER THAN 60 INCHES. THE NATURAL DRAINAGE CLASS IS POORLY DRAINED. WATER MOVEMENT IN THE MOST RESTRICTIVE LAYER IS MODERATELY LOW. AVAILABLE WATER TO A DEPTH OF 60 INCHES IS MODERATE. SHRINK-SWELL POTENTIAL IS MODERATE. THIS SOIL IS NOT FLOODED. IT IS FREQUENTLY PONDED. A SEASONAL ZONE OF WATER SATURATION IS AT 6 INCHES DURING JANUARY, FEBRUARY, MARCH, APRIL, MAY, JUNE, JULY, NOVEMBER, DECEMBER. ORGANIC MATTER CONTENT IN THE SURFACE HORIZON IS ABOUT 3 PERCENT. NONIRRIGATED LAND CAPABILITY CLASSIFICATION IS 3W. THIS SOIL MEETS HYDRIC CRITERIA. THE CALCIUM CARBONATE EQUIVALENT WITHIN 40 INCHES, TYPICALLY, DOES NOT EXCEED 3 PERCENT.

MAP UNIT: CR--CONDIT SILT LOAM
COMPONENT: CONDIT (95%)
THE CONDIT COMPONENT MAKES UP 95 PERCENT OF THE MAP UNIT. SLOPES ARE 0 TO 2 PERCENT. THIS COMPONENT IS ON DEPRESSIONS. THE PARENT MATERIAL CONSISTS OF TILL. DEPTH TO A ROOT RESTRICTIVE LAYER IS GREATER THAN 60 INCHES. THE NATURAL DRAINAGE CLASS IS POORLY DRAINED. WATER MOVEMENT IN THE MOST RESTRICTIVE LAYER IS MODERATELY LOW. AVAILABLE WATER TO A DEPTH OF 60 INCHES IS MODERATE. SHRINK-SWELL POTENTIAL IS MODERATE. THIS SOIL IS NOT FLOODED. IT IS FREQUENTLY PONDED. A SEASONAL ZONE OF WATER SATURATION IS AT 3 INCHES DURING JANUARY, FEBRUARY, MARCH, APRIL, MAY, JUNE, JULY, NOVEMBER, DECEMBER. ORGANIC MATTER CONTENT IN THE SURFACE HORIZON IS ABOUT 3 PERCENT. NONIRRIGATED LAND CAPABILITY CLASSIFICATION IS 3W. THIS SOIL MEETS HYDRIC CRITERIA.

MAP UNIT: FCA--FITCHVILLE SILT LOAM, 1 TO 4 PERCENT SLOPES
COMPONENT: FITCHVILLE (90%)
THE FITCHVILLE COMPONENT MAKES UP 90 PERCENT OF THE MAP UNIT. SLOPES ARE 1 TO 4 PERCENT. THIS COMPONENT IS ON KNOLLS ON STREAM TERRACES. THE PARENT MATERIAL CONSISTS OF SILTY LACUSTRINE DEPOSITS. DEPTH TO A ROOT RESTRICTIVE LAYER IS GREATER THAN 60 INCHES. THE NATURAL DRAINAGE CLASS IS SOMEWHAT POORLY DRAINED. WATER MOVEMENT IN THE MOST RESTRICTIVE LAYER IS MODERATELY HIGH. AVAILABLE WATER TO A DEPTH OF 60 INCHES IS HIGH. SHRINK-SWELL POTENTIAL IS MODERATE. THIS SOIL IS NOT FLOODED. IT IS NOT PONDED. A SEASONAL ZONE OF WATER SATURATION IS AT 12 INCHES DURING JANUARY, FEBRUARY, MARCH, APRIL, MAY, NOVEMBER, DECEMBER. ORGANIC MATTER CONTENT IN THE SURFACE HORIZON IS ABOUT 2 PERCENT. NONIRRIGATED LAND CAPABILITY CLASSIFICATION IS 2W. THIS SOIL DOES NOT MEET HYDRIC CRITERIA.

MAP UNIT: HO--HOLLY SILT LOAM
COMPONENT: HOLLY (95%)
THE HOLLY COMPONENT MAKES UP 95 PERCENT OF THE MAP UNIT. SLOPES ARE 0 TO 2 PERCENT. THIS COMPONENT IS ON FLOOD PLAINS. THE PARENT MATERIAL CONSISTS OF ALLUVIUM. DEPTH TO A ROOT RESTRICTIVE LAYER IS GREATER THAN 60 INCHES. THE NATURAL DRAINAGE CLASS IS POORLY DRAINED. WATER MOVEMENT IN THE MOST RESTRICTIVE LAYER IS MODERATELY HIGH. AVAILABLE WATER TO A DEPTH OF 60 INCHES IS MODERATE. SHRINK-SWELL POTENTIAL IS LOW. THIS SOIL IS FREQUENTLY FLOODED. IT IS NOT PONDED. A SEASONAL ZONE OF WATER SATURATION IS AT 3 INCHES DURING JANUARY, FEBRUARY, MARCH, APRIL, MAY, DECEMBER. ORGANIC MATTER CONTENT IN THE SURFACE HORIZON IS ABOUT 4 PERCENT. NONIRRIGATED LAND CAPABILITY CLASSIFICATION IS 3W. THIS SOIL MEETS HYDRIC CRITERIA. THE CALCIUM CARBONATE EQUIVALENT WITHIN 40 INCHES, TYPICALLY, DOES NOT EXCEED 3 PERCENT.

MAP UNIT: JWA--JIMTOWN SILT LOAM, 0 TO 2 PERCENT SLOPES
COMPONENT: JIMTOWN (95%)
THE JIMTOWN COMPONENT MAKES UP 95 PERCENT OF THE MAP UNIT. SLOPES ARE 0 TO 2 PERCENT. THIS COMPONENT IS ON TERRACES. THE PARENT MATERIAL CONSISTS OF OUTWASH. DEPTH TO A ROOT RESTRICTIVE LAYER IS GREATER THAN 60 INCHES. THE NATURAL DRAINAGE CLASS IS SOMEWHAT POORLY DRAINED. WATER MOVEMENT IN THE MOST RESTRICTIVE LAYER IS MODERATELY HIGH. AVAILABLE WATER TO A DEPTH OF 60 INCHES IS MODERATE. SHRINK-SWELL POTENTIAL IS LOW. THIS SOIL IS NOT FLOODED. IT IS NOT PONDED. A SEASONAL ZONE OF WATER SATURATION IS AT 12 INCHES DURING JANUARY, FEBRUARY, MARCH, APRIL, MAY, DECEMBER. ORGANIC MATTER CONTENT IN THE SURFACE HORIZON IS ABOUT 2 PERCENT. NONIRRIGATED LAND CAPABILITY CLASSIFICATION IS 2W. THIS SOIL DOES NOT MEET HYDRIC CRITERIA.

MAP UNIT: JWB--JIMTOWN SILT LOAM, 2 TO 6 PERCENT SLOPES
COMPONENT: JIMTOWN (95%)
THE JIMTOWN COMPONENT MAKES UP 95 PERCENT OF THE MAP UNIT. SLOPES ARE 2 TO 6 PERCENT. THIS COMPONENT IS ON TERRACES. THE PARENT MATERIAL CONSISTS OF OUTWASH. DEPTH TO A ROOT RESTRICTIVE LAYER IS GREATER THAN 60 INCHES. THE NATURAL DRAINAGE CLASS IS SOMEWHAT POORLY DRAINED. WATER MOVEMENT IN THE MOST RESTRICTIVE LAYER IS MODERATELY HIGH. AVAILABLE WATER TO A DEPTH OF 60 INCHES IS MODERATE. SHRINK-SWELL POTENTIAL IS LOW. THIS SOIL IS NOT FLOODED. IT IS NOT PONDED. A SEASONAL ZONE OF WATER SATURATION IS AT 12 INCHES DURING JANUARY, FEBRUARY, MARCH, APRIL, MAY, DECEMBER. ORGANIC MATTER CONTENT IN THE SURFACE HORIZON IS ABOUT 2 PERCENT. NONIRRIGATED LAND CAPABILITY CLASSIFICATION IS 2E. THIS SOIL DOES NOT MEET HYDRIC CRITERIA.

MAP UNIT: LO--LOBDELL SILT LOAM
COMPONENT: LOBDELL (95%)
THE LOBDELL COMPONENT MAKES UP 95 PERCENT OF THE MAP UNIT. SLOPES ARE 0 TO 2 PERCENT. THIS COMPONENT IS ON FLOOD PLAINS. THE PARENT MATERIAL CONSISTS OF ALLUVIUM. DEPTH TO A ROOT RESTRICTIVE LAYER IS GREATER THAN 60 INCHES. THE NATURAL DRAINAGE CLASS IS MODERATELY WELL DRAINED. WATER MOVEMENT IN THE MOST RESTRICTIVE LAYER IS MODERATELY HIGH. AVAILABLE WATER TO A DEPTH OF 60 INCHES IS MODERATE. SHRINK-SWELL POTENTIAL IS LOW. THIS SOIL IS FREQUENTLY FLOODED. IT IS NOT PONDED. A SEASONAL ZONE OF WATER SATURATION IS AT 30 INCHES DURING JANUARY, FEBRUARY, MARCH, APRIL. ORGANIC MATTER CONTENT IN THE SURFACE HORIZON IS ABOUT 2 PERCENT. NONIRRIGATED LAND CAPABILITY CLASSIFICATION IS 2W. THIS SOIL DOES NOT MEET HYDRIC CRITERIA.

MAP UNIT: LZB--LYKENS SILT LOAM, 2 TO 6 PERCENT SLOPES
COMPONENT: LYKENS (95%)
THE LYKENS COMPONENT MAKES UP 95 PERCENT OF THE MAP UNIT. SLOPES ARE 2 TO 6 PERCENT. THIS COMPONENT IS ON GROUND MORAINES. THE PARENT MATERIAL CONSISTS OF GLACIOLACUSTRINE DEPOSITS OVER OUTWASH OVER TILL. DEPTH TO A ROOT RESTRICTIVE LAYER IS GREATER THAN 60 INCHES. THE NATURAL DRAINAGE CLASS IS MODERATELY WELL DRAINED. WATER MOVEMENT IN THE MOST RESTRICTIVE LAYER IS MODERATELY LOW. AVAILABLE WATER TO A DEPTH OF 60 INCHES IS MODERATE. SHRINK-SWELL POTENTIAL IS LOW. THIS SOIL IS NOT FLOODED. IT IS NOT PONDED. A SEASONAL ZONE OF WATER SATURATION IS AT 27 INCHES DURING JANUARY, FEBRUARY, MARCH, APRIL, DECEMBER. ORGANIC MATTER CONTENT IN THE SURFACE HORIZON IS ABOUT 2 PERCENT. NONIRRIGATED LAND CAPABILITY CLASSIFICATION IS 2E. THIS SOIL DOES NOT MEET HYDRIC CRITERIA.

MAP UNIT: PC--PEWAMO SILTY CLAY LOAM
COMPONENT: PEWAMO (100%)
THE PEWAMO COMPONENT MAKES UP 100 PERCENT OF THE MAP UNIT. SLOPES ARE 0 TO 2 PERCENT. THIS COMPONENT IS ON TILL PLAINS. THE PARENT MATERIAL CONSISTS OF TILL. DEPTH TO A ROOT RESTRICTIVE LAYER IS GREATER THAN 60 INCHES. THE NATURAL DRAINAGE CLASS IS VERY POORLY DRAINED. WATER MOVEMENT IN THE MOST RESTRICTIVE LAYER IS MODERATELY HIGH. AVAILABLE WATER TO A DEPTH OF 60 INCHES IS HIGH. SHRINK-SWELL POTENTIAL IS MODERATE. THIS SOIL IS NOT FLOODED. IT IS FREQUENTLY PONDED. A SEASONAL ZONE OF WATER SATURATION IS AT 9 INCHES DURING JANUARY, FEBRUARY, MARCH, APRIL, MAY, DECEMBER. ORGANIC MATTER CONTENT IN THE SURFACE HORIZON IS ABOUT 8 PERCENT. NONIRRIGATED LAND CAPABILITY CLASSIFICATION IS 2W. THIS SOIL MEETS HYDRIC CRITERIA. THE CALCIUM CARBONATE EQUIVALENT WITHIN 40 INCHES, TYPICALLY, DOES NOT EXCEED 3 PERCENT.

MAP UNIT: SG--SEBRING SILT LOAM
COMPONENT: SEBRING (100%)
THE SEBRING COMPONENT MAKES UP 100 PERCENT OF THE MAP UNIT. SLOPES ARE 0 TO 2 PERCENT. THIS COMPONENT IS ON DEPRESSIONS. THE PARENT MATERIAL CONSISTS OF GLACIOLACUSTRINE DEPOSITS. DEPTH TO A ROOT RESTRICTIVE LAYER IS GREATER THAN 60 INCHES. THE NATURAL DRAINAGE CLASS IS POORLY DRAINED. WATER MOVEMENT IN THE MOST RESTRICTIVE LAYER IS MODERATELY HIGH. AVAILABLE WATER TO A DEPTH OF 60 INCHES IS HIGH. SHRINK-SWELL POTENTIAL IS MODERATE. THIS SOIL IS NOT FLOODED. IT IS FREQUENTLY PONDED. A SEASONAL ZONE OF WATER SATURATION IS AT 3 INCHES DURING JANUARY, FEBRUARY, MARCH, APRIL, MAY, JUNE, NOVEMBER, DECEMBER. ORGANIC MATTER CONTENT IN THE SURFACE HORIZON IS ABOUT 4 PERCENT. NONIRRIGATED LAND CAPABILITY CLASSIFICATION IS 3W. THIS SOIL MEETS HYDRIC CRITERIA. THE CALCIUM CARBONATE EQUIVALENT WITHIN 40 INCHES, TYPICALLY, DOES NOT EXCEED 3 PERCENT.

MAP UNIT: SH--SHOALS SILT LOAM
COMPONENT: SHOALS (95%)
THE SHOALS COMPONENT MAKES UP 95 PERCENT OF THE MAP UNIT. SLOPES ARE 0 TO 2 PERCENT. THIS COMPONENT IS ON FLOOD PLAINS. THE PARENT MATERIAL CONSISTS OF ALLUVIUM. DEPTH TO A ROOT RESTRICTIVE LAYER IS GREATER THAN 60 INCHES. THE NATURAL DRAINAGE CLASS IS SOMEWHAT POORLY DRAINED. WATER MOVEMENT IN THE MOST RESTRICTIVE LAYER IS MODERATELY HIGH. AVAILABLE WATER TO A DEPTH OF 60 INCHES IS HIGH. SHRINK-SWELL POTENTIAL IS LOW. THIS SOIL IS NOT FLOODED. IT IS NOT PONDED. A SEASONAL ZONE OF WATER SATURATION IS AT 24 INCHES DURING JANUARY, FEBRUARY, MARCH, APRIL. ORGANIC MATTER CONTENT IN THE SURFACE HORIZON IS ABOUT 4 PERCENT. NONIRRIGATED LAND CAPABILITY CLASSIFICATION IS 2W. THIS SOIL DOES NOT MEET HYDRIC CRITERIA. THE CALCIUM CARBONATE EQUIVALENT WITHIN 40 INCHES, TYPICALLY, DOES NOT EXCEED 13 PERCENT.

MAP UNIT: TOA--TIRO SILT LOAM, 1 TO 4 PERCENT SLOPES
COMPONENT: TIRO (85%)
THE TIRO COMPONENT MAKES UP 85 PERCENT OF THE MAP UNIT. SLOPES ARE 1 TO 4 PERCENT. THIS COMPONENT IS ON TILL PLAINS. THE PARENT MATERIAL CONSISTS OF GLACIOLACUSTRINE DEPOSITS OVER OUTWASH OVER TILL. DEPTH TO A ROOT RESTRICTIVE LAYER IS GREATER THAN 60 INCHES. THE NATURAL DRAINAGE CLASS IS SOMEWHAT POORLY DRAINED. WATER MOVEMENT IN THE MOST RESTRICTIVE LAYER IS MODERATELY LOW. AVAILABLE WATER TO A DEPTH OF 60 INCHES IS MODERATE. SHRINK-SWELL POTENTIAL IS LOW. THIS SOIL IS NOT FLOODED. IT IS NOT PONDED. A SEASONAL ZONE OF WATER SATURATION IS AT 12 INCHES DURING JANUARY, FEBRUARY, MARCH, APRIL, MAY, DECEMBER. ORGANIC MATTER CONTENT IN THE SURFACE HORIZON IS ABOUT 2 PERCENT. NONIRRIGATED LAND CAPABILITY CLASSIFICATION IS 2W. THIS SOIL DOES NOT MEET HYDRIC CRITERIA. THE CALCIUM CARBONATE EQUIVALENT WITHIN 40 INCHES, TYPICALLY, DOES NOT EXCEED 10 PERCENT.

| REV. | DATE | APP# | DESCRIPTION | APPROVAL |
|---|---|---|---|---|

STV
Douglassville, PA Houston, TX Baltimore, MD Williamsport, PA

THE LOCATION OF THE PIPELINE FACILITIES AS SHOWN HEREON MUST BE CONSIDERED AS APPROXIMATE ONLY. BEFORE DIGGING OR FOR AN EXACT LOCATION PLEASE CONTACT YOUR STATES UNDERGROUND UTILITY LOCATION SERVICE.

ENGINEERING RECORD

| | |
|---|---|
| DRAWN BY | RFT |
| CHECKED BY | CDA |
| APPROVED BY | BJB |
| DATE | XYZ |
| SCALE | AS NOTED |

INLAND CORPORATION

12-INCH TIFFIN JCT TO EASTON JCT
ALLEGHENY ACCESS PIPELINE PROJECT
EROSION AND SEDIMENTATION
CONTROL NOTES

SENECA, HURON, ASHLAND AND WAYNE COUNTIES, OHIO

OLD DRAWING NO.

DWG. NO. 38-15486-TE-817

REV. NO. 0

SOILS ENCOUNTERED WITHIN WAYNE COUNTY, OH

MAP UNIT: ADD--ALEXANDRIA SILT LOAM, 12 TO 18 PERCENT SLOPES
COMPONENT: ALEXANDRIA (85%)
THE ALEXANDRIA COMPONENT MAKES UP 85 PERCENT OF THE MAP UNIT. SLOPES ARE 12 TO 18 PERCENT. THIS COMPONENT IS ON VALLEYS ON UPLANDS. THE PARENT MATERIAL CONSISTS OF TILL. DEPTH TO A ROOT RESTRICTIVE LAYER IS GREATER THAN 60 INCHES. THE NATURAL DRAINAGE CLASS IS WELL DRAINED. WATER MOVEMENT IN THE MOST RESTRICTIVE LAYER IS MODERATELY HIGH. AVAILABLE WATER TO A DEPTH OF 60 INCHES IS MODERATE. SHRINK-SWELL POTENTIAL IS MODERATE. THIS SOIL IS NOT FLOODED. IT IS NOT PONDED. A SEASONAL ZONE OF WATER SATURATION IS AT 60 INCHES DURING JANUARY, FEBRUARY, MARCH, APRIL, MAY, DECEMBER. ORGANIC MATTER CONTENT IN THE SURFACE HORIZON IS ABOUT 2 PERCENT. NONIRRIGATED LAND CAPABILITY CLASSIFICATION IS 4E. THIS SOIL DOES NOT MEET HYDRIC CRITERIA. THE CALCIUM CARBONATE EQUIVALENT WITHIN 40 INCHES, TYPICALLY, DOES NOT EXCEED 15 PERCENT.

MAP UNIT: ADF--ALEXANDRIA SILT LOAM, 18 TO 50 PERCENT SLOPES
COMPONENT: ALEXANDRIA (85%)
THE ALEXANDRIA COMPONENT MAKES UP 85 PERCENT OF THE MAP UNIT. SLOPES ARE 18 TO 50 PERCENT. THIS COMPONENT IS ON V-SHAPED VALLEYS ON UPLANDS. THE PARENT MATERIAL CONSISTS OF TILL. DEPTH TO A ROOT RESTRICTIVE LAYER IS GREATER THAN 60 INCHES. THE NATURAL DRAINAGE CLASS IS WELL DRAINED. WATER MOVEMENT IN THE MOST RESTRICTIVE LAYER IS MODERATELY HIGH. AVAILABLE WATER TO A DEPTH OF 60 INCHES IS MODERATE. SHRINK-SWELL POTENTIAL IS MODERATE. THIS SOIL IS NOT FLOODED. IT IS NOT PONDED. A SEASONAL ZONE OF WATER SATURATION IS AT 60 INCHES DURING JANUARY, FEBRUARY, MARCH, APRIL, MAY, DECEMBER. ORGANIC MATTER CONTENT IN THE SURFACE HORIZON IS ABOUT 2 PERCENT. NONIRRIGATED LAND CAPABILITY CLASSIFICATION IS 7E. THIS SOIL DOES NOT MEET HYDRIC CRITERIA. THE CALCIUM CARBONATE EQUIVALENT WITHIN 40 INCHES, TYPICALLY, DOES NOT EXCEED 15 PERCENT.

MAP UNIT: BNA--BENNINGTON SILT LOAM, 0 TO 2 PERCENT SLOPES
COMPONENT: BENNINGTON (85%)
THE BENNINGTON COMPONENT MAKES UP 85 PERCENT OF THE MAP UNIT. SLOPES ARE 0 TO 2 PERCENT. THIS COMPONENT IS ON FLATS ON UPLANDS. THE PARENT MATERIAL CONSISTS OF TILL. DEPTH TO A ROOT RESTRICTIVE LAYER IS GREATER THAN 60 INCHES. THE NATURAL DRAINAGE CLASS IS SOMEWHAT POORLY DRAINED. WATER MOVEMENT IN THE MOST RESTRICTIVE LAYER IS MODERATELY LOW. AVAILABLE WATER TO A DEPTH OF 60 INCHES IS MODERATE. SHRINK-SWELL POTENTIAL IS LOW. THIS SOIL IS NOT FLOODED. IT IS NOT PONDED. A SEASONAL ZONE OF WATER SATURATION IS AT 21 INCHES DURING JANUARY, FEBRUARY, MARCH, APRIL, MAY, NOVEMBER, DECEMBER. ORGANIC MATTER CONTENT IN THE SURFACE HORIZON IS ABOUT 3 PERCENT. NONIRRIGATED LAND CAPABILITY CLASSIFICATION IS 2W. THIS SOIL DOES NOT MEET HYDRIC CRITERIA. THE CALCIUM CARBONATE EQUIVALENT WITHIN 40 INCHES, TYPICALLY, DOES NOT EXCEED 15 PERCENT.

MAP UNIT: BNB--BENNINGTON SILT LOAM, 2 TO 6 PERCENT SLOPES
COMPONENT: BENNINGTON (85%)
THE BENNINGTON COMPONENT MAKES UP 85 PERCENT OF THE MAP UNIT. SLOPES ARE 2 TO 6 PERCENT. THIS COMPONENT IS ON GROUND MORAINES. THE PARENT MATERIAL CONSISTS OF TILL. DEPTH TO A ROOT RESTRICTIVE LAYER IS GREATER THAN 60 INCHES. THE NATURAL DRAINAGE CLASS IS SOMEWHAT POORLY DRAINED. WATER MOVEMENT IN THE MOST RESTRICTIVE LAYER IS MODERATELY LOW. AVAILABLE WATER TO A DEPTH OF 60 INCHES IS MODERATE. SHRINK-SWELL POTENTIAL IS LOW. THIS SOIL IS NOT FLOODED. IT IS NOT PONDED. A SEASONAL ZONE OF WATER SATURATION IS AT 21 INCHES DURING JANUARY, FEBRUARY, MARCH, APRIL, MAY, NOVEMBER, DECEMBER. ORGANIC MATTER CONTENT IN THE SURFACE HORIZON IS ABOUT 3 PERCENT. NONIRRIGATED LAND CAPABILITY CLASSIFICATION IS 2E. THIS SOIL DOES NOT MEET HYDRIC CRITERIA. THE CALCIUM CARBONATE EQUIVALENT WITHIN 40 INCHES, TYPICALLY, DOES NOT EXCEED 15 PERCENT.

MAP UNIT: BRF--BERKS SILT LOAM, 25 TO 70 PERCENT SLOPES
COMPONENT: BERKS (85%)
THE BERKS COMPONENT MAKES UP 85 PERCENT OF THE MAP UNIT. SLOPES ARE 25 TO 70 PERCENT. THIS COMPONENT IS ON V-SHAPED VALLEYS ON UPLANDS. THE PARENT MATERIAL CONSISTS OF RESIDUUM WEATHERED FROM SANDSTONE AND SHALE AND/OR RESIDUUM WEATHERED FROM SILTSTONE. DEPTH TO A ROOT RESTRICTIVE LAYER, BEDROCK, PARALITHIC, IS 20 TO 40 INCHES. THE NATURAL DRAINAGE CLASS IS WELL DRAINED. WATER MOVEMENT IN THE MOST RESTRICTIVE LAYER IS VERY LOW. AVAILABLE WATER TO A DEPTH OF 60 INCHES IS VERY LOW. SHRINKSWELL POTENTIAL IS LOW. THIS SOIL IS NOT FLOODED. IT IS NOT PONDED. THERE IS NO ZONE OF WATER SATURATION WITHIN A DEPTH OF 72 INCHES. ORGANIC MATTER CONTENT IN THE SURFACE HORIZON IS ABOUT 2 PERCENT. NONIRRIGATED LAND CAPABILITY CLASSIFICATION IS 7E. THIS SOIL DOES NOT MEET HYDRIC CRITERIA.

MAP UNIT: BTB--BOGART LOAM, 2 TO 6 PERCENT SLOPES
COMPONENT: BOGART (85%)
THE BOGART COMPONENT MAKES UP 85 PERCENT OF THE MAP UNIT. SLOPES ARE 2 TO 6 PERCENT. THIS COMPONENT IS ON OUTWASH PLAINS. THE PARENT MATERIAL CONSISTS OF STRATIFIED OUTWASH. DEPTH TO A ROOT RESTRICTIVE LAYER IS GREATER THAN 60 INCHES. THE NATURAL DRAINAGE CLASS IS MODERATELY WELL DRAINED. WATER MOVEMENT IN THE MOST RESTRICTIVE LAYER IS MODERATELY HIGH. AVAILABLE WATER TO A DEPTH OF 60 INCHES IS MODERATE. SHRINKSWELL POTENTIAL IS LOW. THIS SOIL IS NOT FLOODED. IT IS NOT PONDED. A SEASONAL ZONE OF WATER SATURATION IS AT 33 INCHES DURING JANUARY, FEBRUARY, MARCH, APRIL, MAY, NOVEMBER, DECEMBER. ORGANIC MATTER CONTENT IN THE SURFACE HORIZON IS ABOUT 2 PERCENT. NONIRRIGATED LAND CAPABILITY CLASSIFICATION IS 2E. THIS SOIL DOES NOT MEET HYDRIC CRITERIA.

MAP UNIT: CK--CARLISLE MUCK, PONDED
COMPONENT: CARLISLE (90%)
THE CARLISLE COMPONENT MAKES UP 90 PERCENT OF THE MAP UNIT. SLOPES ARE 0 TO 2 PERCENT. THIS COMPONENT IS ON SWAMPS. THE PARENT MATERIAL CONSISTS OF ORGANIC MATERIAL. DEPTH TO A ROOT RESTRICTIVE LAYER IS GREATER THAN 60 INCHES. THE NATURAL DRAINAGE CLASS IS VERY POORLY DRAINED. WATER MOVEMENT IN THE MOST RESTRICTIVE LAYER IS MODERATELY HIGH. AVAILABLE WATER TO A DEPTH OF 60 INCHES IS VERY HIGH. SHRINK-SWELL POTENTIAL IS LOW. THIS SOIL IS NOT FLOODED. IT IS FREQUENTLY PONDED. A SEASONAL ZONE OF WATER SATURATION IS AT 6 INCHES DURING JANUARY, FEBRUARY, MARCH, APRIL, MAY, JUNE, JULY, AUGUST, SEPTEMBER, OCTOBER, NOVEMBER, DECEMBER. ORGANIC MATTER CONTENT IN THE SURFACE HORIZON IS ABOUT 84 PERCENT. NONIRRIGATED LAND CAPABILITY CLASSIFICATION IS 5W. THIS SOIL MEETS HYDRIC CRITERIA.

MAP UNIT: CGB--CARDINGTON SILT LOAM, 2 TO 6 PERCENT SLOPES
COMPONENT: CARDINGTON (85%)
THE CARDINGTON COMPONENT MAKES UP 85 PERCENT OF THE MAP UNIT. SLOPES ARE 2 TO 6 PERCENT. THIS COMPONENT IS ON KNOLLS ON UPLANDS. THE PARENT MATERIAL CONSISTS OF TILL. DEPTH TO A ROOT RESTRICTIVE LAYER IS GREATER THAN 60 INCHES. THE NATURAL DRAINAGE CLASS IS MODERATELY WELL DRAINED. WATER MOVEMENT IN THE MOST RESTRICTIVE LAYER IS MODERATELY HIGH. AVAILABLE WATER TO A DEPTH OF 60 INCHES IS MODERATE. SHRINK-SWELL POTENTIAL IS MODERATE. THIS SOIL IS NOT FLOODED. IT IS NOT PONDED. A SEASONAL ZONE OF WATER SATURATION IS AT 33 INCHES DURING JANUARY, FEBRUARY, MARCH, APRIL, NOVEMBER, DECEMBER. ORGANIC MATTER CONTENT IN THE SURFACE HORIZON IS ABOUT 2 PERCENT. NONIRRIGATED LAND CAPABILITY CLASSIFICATION IS 2E. THIS SOIL DOES NOT MEET HYDRIC CRITERIA.

MAP UNIT: CGB2--CARDINGTON SILT LOAM, 2 TO 6 PERCENT SLOPES, ERODED
COMPONENT: CARDINGTON (85%)
THE CARDINGTON COMPONENT MAKES UP 85 PERCENT OF THE MAP UNIT. SLOPES ARE 2 TO 6 PERCENT. THIS COMPONENT IS ON KNOLLS ON UPLANDS. THE PARENT MATERIAL CONSISTS OF TILL. DEPTH TO A ROOT RESTRICTIVE LAYER IS GREATER THAN 60 INCHES. THE NATURAL DRAINAGE CLASS IS MODERATELY WELL DRAINED. WATER MOVEMENT IN THE MOST RESTRICTIVE LAYER IS MODERATELY LOW. AVAILABLE WATER TO A DEPTH OF 60 INCHES IS MODERATE. SHRINK-SWELL POTENTIAL IS MODERATE. THIS SOIL IS NOT FLOODED. IT IS NOT PONDED. A SEASONAL ZONE OF WATER SATURATION IS AT 33 INCHES DURING JANUARY, FEBRUARY, MARCH, APRIL, NOVEMBER, DECEMBER. ORGANIC MATTER CONTENT IN THE SURFACE HORIZON IS ABOUT 2 PERCENT. NONIRRIGATED LAND CAPABILITY CLASSIFICATION IS 2E. THIS SOIL DOES NOT MEET HYDRIC CRITERIA.

MAP UNIT: CGC--CARDINGTON SILT LOAM, 6 TO 12 PERCENT SLOPES
COMPONENT: CARDINGTON (85%)
THE CARDINGTON COMPONENT MAKES UP 85 PERCENT OF THE MAP UNIT. SLOPES ARE 6 TO 12 PERCENT. THIS COMPONENT IS ON KNOLLS ON UPLANDS. THE PARENT MATERIAL CONSISTS OF TILL. DEPTH TO A ROOT RESTRICTIVE LAYER IS GREATER THAN 60 INCHES. THE NATURAL DRAINAGE CLASS IS MODERATELY WELL DRAINED. WATER MOVEMENT IN THE MOST RESTRICTIVE LAYER IS MODERATELY HIGH. AVAILABLE WATER TO A DEPTH OF 60 INCHES IS MODERATE. SHRINK-SWELL POTENTIAL IS MODERATE. THIS SOIL IS NOT FLOODED. IT IS NOT PONDED. A SEASONAL ZONE OF WATER SATURATION IS AT 33 INCHES DURING JANUARY, FEBRUARY, MARCH, APRIL, NOVEMBER, DECEMBER. ORGANIC MATTER CONTENT IN THE SURFACE HORIZON IS ABOUT 2 PERCENT. NONIRRIGATED LAND CAPABILITY CLASSIFICATION IS 3E. THIS SOIL DOES NOT MEET HYDRIC CRITERIA.

MAP UNIT: CGC2--CARDINGTON SILT LOAM, 6 TO 12 PERCENT SLOPES, ERODED
COMPONENT: CARDINGTON (90%)
THE CARDINGTON COMPONENT MAKES UP 90 PERCENT OF THE MAP UNIT. SLOPES ARE 6 TO 12 PERCENT. THIS COMPONENT IS ON KNOLLS ON UPLANDS. THE PARENT MATERIAL CONSISTS OF TILL. DEPTH TO A ROOT RESTRICTIVE LAYER IS GREATER THAN 60 INCHES. THE NATURAL DRAINAGE CLASS IS MODERATELY WELL DRAINED. WATER MOVEMENT IN THE MOST RESTRICTIVE LAYER IS MODERATELY HIGH. AVAILABLE WATER TO A DEPTH OF 60 INCHES IS MODERATE. SHRINK-SWELL POTENTIAL IS MODERATE. THIS SOIL IS NOT FLOODED. IT IS NOT PONDED. A SEASONAL ZONE OF WATER SATURATION IS AT 33 INCHES DURING JANUARY, FEBRUARY, MARCH, APRIL, NOVEMBER, DECEMBER. ORGANIC MATTER CONTENT IN THE SURFACE HORIZON IS ABOUT 2 PERCENT. NONIRRIGATED LAND CAPABILITY CLASSIFICATION IS 3E. THIS SOIL DOES NOT MEET HYDRIC CRITERIA.

MAP UNIT: CNB--CHILI LOAM, 2 TO 6 PERCENT SLOPES
COMPONENT: CHILI (90%)
THE CHILI COMPONENT MAKES UP 90 PERCENT OF THE MAP UNIT. SLOPES ARE 2 TO 6 PERCENT. THIS COMPONENT IS ON STREAM TERRACES. THE PARENT MATERIAL CONSISTS OF STRATIFIED OUTWASH. DEPTH TO A ROOT RESTRICTIVE LAYER IS GREATER THAN 60 INCHES. THE NATURAL DRAINAGE CLASS IS WELL DRAINED. WATER MOVEMENT IN THE MOST RESTRICTIVE LAYER IS MODERATELY HIGH. AVAILABLE WATER TO A DEPTH OF 60 INCHES IS MODERATE. SHRINK-SWELL POTENTIAL IS LOW. THIS SOIL IS NOT FLOODED. IT IS NOT PONDED. THERE IS NO ZONE OF WATER SATURATION WITHIN A DEPTH OF 72 INCHES. ORGANIC MATTER CONTENT IN THE SURFACE HORIZON IS ABOUT 2 PERCENT. NONIRRIGATED LAND CAPABILITY CLASSIFICATION IS 2E. THIS SOIL DOES NOT MEET HYDRIC CRITERIA.

MAP UNIT: CNC--CHILI LOAM, 6 TO 12 PERCENT SLOPES
COMPONENT: CHILI (100%)
THE CHILI COMPONENT MAKES UP 100 PERCENT OF THE MAP UNIT. SLOPES ARE 6 TO 12 PERCENT. THIS COMPONENT IS ON KAMES. THE PARENT MATERIAL CONSISTS OF STRATIFIED OUTWASH. DEPTH TO A ROOT RESTRICTIVE LAYER IS GREATER THAN 60 INCHES. THE NATURAL DRAINAGE CLASS IS WELL DRAINED. WATER MOVEMENT IN THE MOST RESTRICTIVE LAYER IS MODERATELY HIGH. AVAILABLE WATER TO A DEPTH OF 60 INCHES IS MODERATE. SHRINK-SWELL POTENTIAL IS LOW. THIS SOIL IS NOT FLOODED. IT IS NOT PONDED. THERE IS NO ZONE OF WATER SATURATION WITHIN A DEPTH OF 72 INCHES. ORGANIC MATTER CONTENT IN THE SURFACE HORIZON IS ABOUT 2 PERCENT. NONIRRIGATED LAND CAPABILITY CLASSIFICATION IS 3E. THIS SOIL DOES NOT MEET HYDRIC CRITERIA.

MAP UNIT: CS--CONDIT SILT LOAM
COMPONENT: CONDIT (90%)
THE CONDIT COMPONENT MAKES UP 90 PERCENT OF THE MAP UNIT. SLOPES ARE 0 TO 2 PERCENT. THIS COMPONENT IS ON DEPRESSIONS. THE PARENT MATERIAL CONSISTS OF TILL. DEPTH TO A ROOT RESTRICTIVE LAYER IS GREATER THAN 60 INCHES. THE NATURAL DRAINAGE CLASS IS VERY POORLY DRAINED. WATER MOVEMENT IN THE MOST RESTRICTIVE LAYER IS MODERATELY LOW. AVAILABLE WATER TO A DEPTH OF 60 INCHES IS MODERATE. SHRINK-SWELL POTENTIAL IS MODERATE. THIS SOIL IS NOT FLOODED. IT IS FREQUENTLY PONDED. A SEASONAL ZONE OF WATER SATURATION IS AT 6 INCHES DURING JANUARY, FEBRUARY, MARCH, APRIL, MAY, JUNE, JULY, NOVEMBER, DECEMBER. ORGANIC MATTER CONTENT IN THE SURFACE HORIZON IS ABOUT 3 PERCENT. NONIRRIGATED LAND CAPABILITY CLASSIFICATION IS 3W. THIS SOIL MEETS HYDRIC CRITERIA.

MAP UNIT: EUA--EUCLID SILT LOAM, OCCASIONALLY FLOODED
COMPONENT: EUCLID (85%)
THE EUCLID COMPONENT MAKES UP 85 PERCENT OF THE MAP UNIT. SLOPES ARE 0 TO 2 PERCENT. THIS COMPONENT IS ON STREAM TERRACES. THE PARENT MATERIAL CONSISTS OF STRATIFIED MATERIAL. DEPTH TO A ROOT RESTRICTIVE LAYER IS GREATER THAN 60 INCHES. THE NATURAL DRAINAGE CLASS IS SOMEWHAT POORLY DRAINED. WATER MOVEMENT IN THE MOST RESTRICTIVE LAYER IS MODERATELY HIGH. AVAILABLE WATER TO A DEPTH OF 60 INCHES IS HIGH. SHRINK-SWELL POTENTIAL IS LOW. THIS SOIL IS OCCASIONALLY FLOODED. IT IS NOT PONDED. A SEASONAL ZONE OF WATER SATURATION IS AT 21 INCHES DURING JANUARY, FEBRUARY, MARCH, APRIL, MAY, JUNE, NOVEMBER, DECEMBER. ORGANIC MATTER CONTENT IN THE SURFACE HORIZON IS ABOUT 2 PERCENT. NONIRRIGATED LAND CAPABILITY CLASSIFICATION IS 2W. THIS SOIL DOES NOT MEET HYDRIC CRITERIA.

MAP UNIT: FCA--FITCHVILLE SILT LOAM, 0 TO 2 PERCENT SLOPES
COMPONENT: FITCHVILLE (85%)
THE FITCHVILLE COMPONENT MAKES UP 85 PERCENT OF THE MAP UNIT. SLOPES ARE 0 TO 2 PERCENT. THIS COMPONENT IS ON LAKE PLAINS. THE PARENT MATERIAL CONSISTS OF SILTY LACUSTRINE DEPOSITS. DEPTH TO A ROOT RESTRICTIVE LAYER IS GREATER THAN 60 INCHES. THE NATURAL DRAINAGE CLASS IS SOMEWHAT POORLY DRAINED. WATER MOVEMENT IN THE MOST RESTRICTIVE LAYER IS MODERATELY HIGH. AVAILABLE WATER TO A DEPTH OF 60 INCHES IS HIGH. SHRINK-SWELL POTENTIAL IS MODERATE. THIS SOIL IS NOT FLOODED. IT IS NOT PONDED. A SEASONAL ZONE OF WATER SATURATION IS AT 21 INCHES DURING JANUARY, FEBRUARY, MARCH, APRIL, MAY, NOVEMBER, DECEMBER. ORGANIC MATTER CONTENT IN THE SURFACE HORIZON IS ABOUT 2 PERCENT. NONIRRIGATED LAND CAPABILITY CLASSIFICATION IS 2W. THIS SOIL DOES NOT MEET HYDRIC CRITERIA.

MAP UNIT: FCB--FITCHVILLE SILT LOAM, 2 TO 6 PERCENT SLOPES
COMPONENT: FITCHVILLE (85%)
THE FITCHVILLE COMPONENT MAKES UP 85 PERCENT OF THE MAP UNIT. SLOPES ARE 2 TO 6 PERCENT. THIS COMPONENT IS ON TERRACES. THE PARENT MATERIAL CONSISTS OF SILTY LACUSTRINE DEPOSITS. DEPTH TO A ROOT RESTRICTIVE LAYER IS GREATER THAN 60 INCHES. THE NATURAL DRAINAGE CLASS IS SOMEWHAT POORLY DRAINED. WATER MOVEMENT IN THE MOST RESTRICTIVE LAYER IS MODERATELY HIGH. AVAILABLE WATER TO A DEPTH OF 60 INCHES IS HIGH. SHRINK-SWELL POTENTIAL IS MODERATE. THIS SOIL IS NOT FLOODED. IT IS NOT PONDED. A SEASONAL ZONE OF WATER SATURATION IS AT 21 INCHES DURING JANUARY, FEBRUARY, MARCH, APRIL, MAY, NOVEMBER, DECEMBER. ORGANIC MATTER CONTENT IN THE SURFACE HORIZON IS ABOUT 2 PERCENT. NONIRRIGATED LAND CAPABILITY CLASSIFICATION IS 2E. THIS SOIL DOES NOT MEET HYDRIC CRITERIA.

MAP UNIT: GFB--GLENFORD SILT LOAM, 2 TO 6 PERCENT SLOPES
COMPONENT: GLENFORD (90%)
THE GLENFORD COMPONENT MAKES UP 90 PERCENT OF THE MAP UNIT. SLOPES ARE 2 TO 6 PERCENT. THIS COMPONENT IS ON TERRACES. THE PARENT MATERIAL CONSISTS OF SILTY LACUSTRINE DEPOSITS. DEPTH TO A ROOT RESTRICTIVE LAYER IS GREATER THAN 60 INCHES. THE NATURAL DRAINAGE CLASS IS MODERATELY WELL DRAINED. WATER MOVEMENT IN THE MOST RESTRICTIVE LAYER IS MODERATELY HIGH. AVAILABLE WATER TO A DEPTH OF 60 INCHES IS HIGH. SHRINK-SWELL POTENTIAL IS MODERATE. THIS SOIL IS NOT FLOODED. IT IS NOT PONDED. A SEASONAL ZONE OF WATER SATURATION IS AT 33 INCHES DURING JANUARY, FEBRUARY, MARCH, APRIL, MAY, NOVEMBER, DECEMBER. ORGANIC MATTER CONTENT IN THE SURFACE HORIZON IS ABOUT 2 PERCENT. NONIRRIGATED LAND CAPABILITY CLASSIFICATION IS 2E. THIS SOIL DOES NOT MEET HYDRIC CRITERIA.

MAP UNIT: GFC--GLENFORD SILT LOAM, 6 TO 12 PERCENT SLOPES
COMPONENT: GLENFORD (90%)
THE GLENFORD COMPONENT MAKES UP 90 PERCENT OF THE MAP UNIT. SLOPES ARE 6 TO 12 PERCENT. THIS COMPONENT IS ON DRAINAGEWAYS ON TERRACES. THE PARENT MATERIAL CONSISTS OF SILTY LACUSTRINE DEPOSITS. DEPTH TO A ROOT RESTRICTIVE LAYER IS GREATER THAN 60 INCHES. THE NATURAL DRAINAGE CLASS IS MODERATELY WELL DRAINED. WATER MOVEMENT IN THE MOST RESTRICTIVE LAYER IS MODERATELY HIGH. AVAILABLE WATER TO A DEPTH OF 60 INCHES IS HIGH. SHRINK-SWELL POTENTIAL IS MODERATE. THIS SOIL IS NOT FLOODED. IT IS NOT PONDED. A SEASONAL ZONE OF WATER SATURATION IS AT 33 INCHES DURING JANUARY, FEBRUARY, MARCH, APRIL, MAY, NOVEMBER, DECEMBER. ORGANIC MATTER CONTENT IN THE SURFACE HORIZON IS ABOUT 2 PERCENT. NONIRRIGATED LAND CAPABILITY CLASSIFICATION IS 3E. THIS SOIL DOES NOT MEET HYDRIC CRITERIA.

MAP UNIT: GFC2--GLENFORD SILT LOAM, 6 TO 12 PERCENT SLOPES, ERODED
COMPONENT: GLENFORD (90%)
THE GLENFORD COMPONENT MAKES UP 90 PERCENT OF THE MAP UNIT. SLOPES ARE 6 TO 12 PERCENT. THIS COMPONENT IS ON DRAINAGEWAYS ON TERRACES. THE PARENT MATERIAL CONSISTS OF SILTY LACUSTRINE DEPOSITS. DEPTH TO A ROOT RESTRICTIVE LAYER IS GREATER THAN 60 INCHES. THE NATURAL DRAINAGE CLASS IS MODERATELY WELL DRAINED. WATER MOVEMENT IN THE MOST RESTRICTIVE LAYER IS MODERATELY HIGH. AVAILABLE WATER TO A DEPTH OF 60 INCHES IS HIGH. SHRINK-SWELL POTENTIAL IS MODERATE. THIS SOIL IS NOT FLOODED. IT IS NOT PONDED. A SEASONAL ZONE OF WATER SATURATION IS AT 33 INCHES DURING JANUARY, FEBRUARY, MARCH, APRIL, MAY, NOVEMBER, DECEMBER. ORGANIC MATTER CONTENT IN THE SURFACE HORIZON IS ABOUT 2 PERCENT. NONIRRIGATED LAND CAPABILITY CLASSIFICATION IS 3E. THIS SOIL DOES NOT MEET HYDRIC CRITERIA.

MAP UNIT: HDA--HASKINS SILT LOAM, 0 TO 3 PERCENT SLOPES
COMPONENT: HASKINS (90%)
THE HASKINS COMPONENT MAKES UP 90 PERCENT OF THE MAP UNIT. SLOPES ARE 0 TO 3 PERCENT. THIS COMPONENT IS ON OUTWASH PLAINS. THE PARENT MATERIAL CONSISTS OF LACUSTRINE DEPOSITS AND/OR TILL. DEPTH TO A ROOT RESTRICTIVE LAYER IS GREATER THAN 60 INCHES. THE NATURAL DRAINAGE CLASS IS SOMEWHAT POORLY DRAINED. WATER MOVEMENT IN THE MOST RESTRICTIVE LAYER IS LOW. AVAILABLE WATER TO A DEPTH OF 60 INCHES IS MODERATE. SHRINKSWELL POTENTIAL IS MODERATE. THIS SOIL IS NOT FLOODED. IT IS NOT PONDED. A SEASONAL ZONE OF WATER SATURATION IS AT 21 INCHES DURING JANUARY, FEBRUARY, MARCH, APRIL. ORGANIC MATTER CONTENT IN THE SURFACE HORIZON IS ABOUT 2 PERCENT. NONIRRIGATED LAND CAPABILITY CLASSIFICATION IS 2W. THIS SOIL DOES NOT MEET HYDRIC CRITERIA. THE CALCIUM CARBONATE EQUIVALENT WITHIN 40 INCHES, TYPICALLY, DOES NOT EXCEED 15 PERCENT.

MAP UNIT: JTA--JIMTOWN LOAM, 0 TO 2 PERCENT SLOPES
COMPONENT: JIMTOWN (90%)
THE JIMTOWN COMPONENT MAKES UP 90 PERCENT OF THE MAP UNIT. SLOPES ARE 0 TO 2 PERCENT. THIS COMPONENT IS ON STREAM TERRACES. THE PARENT MATERIAL CONSISTS OF STRATIFIED OUTWASH. DEPTH TO A ROOT RESTRICTIVE LAYER IS GREATER THAN 60 INCHES. THE NATURAL DRAINAGE CLASS IS SOMEWHAT POORLY DRAINED. WATER MOVEMENT IN THE MOST RESTRICTIVE LAYER IS MODERATELY HIGH. AVAILABLE WATER TO A DEPTH OF 60 INCHES IS MODERATE. SHRINK-SWELL POTENTIAL IS LOW. THIS SOIL IS NOT FLOODED. IT IS NOT PONDED. A SEASONAL ZONE OF WATER SATURATION IS AT 21 INCHES DURING JANUARY, FEBRUARY, MARCH, APRIL, MAY, DECEMBER. ORGANIC MATTER CONTENT IN THE SURFACE HORIZON IS ABOUT 2 PERCENT. NONIRRIGATED LAND CAPABILITY CLASSIFICATION IS 2W. THIS SOIL DOES NOT MEET HYDRIC CRITERIA.

MAP UNIT: JTB--JIMTOWN LOAM, 2 TO 6 PERCENT SLOPES
COMPONENT: JIMTOWN (90%)
THE JIMTOWN COMPONENT MAKES UP 90 PERCENT OF THE MAP UNIT. SLOPES ARE 2 TO 6 PERCENT. THIS COMPONENT IS ON STREAM TERRACES. THE PARENT MATERIAL CONSISTS OF STRATIFIED OUTWASH. DEPTH TO A ROOT RESTRICTIVE LAYER IS GREATER THAN 60 INCHES. THE NATURAL DRAINAGE CLASS IS SOMEWHAT POORLY DRAINED. WATER MOVEMENT IN THE MOST RESTRICTIVE LAYER IS MODERATELY HIGH. AVAILABLE WATER TO A DEPTH OF 60 INCHES IS MODERATE. SHRINK-SWELL POTENTIAL IS LOW. THIS SOIL IS NOT FLOODED. IT IS NOT PONDED. A SEASONAL ZONE OF WATER SATURATION IS AT 21 INCHES DURING JANUARY, FEBRUARY, MARCH, APRIL, MAY, DECEMBER. ORGANIC MATTER CONTENT IN THE SURFACE HORIZON IS ABOUT 2 PERCENT. NONIRRIGATED LAND CAPABILITY CLASSIFICATION IS 2E. THIS SOIL DOES NOT MEET HYDRIC CRITERIA.

MAP UNIT: LD--LINWOOD MUCK
COMPONENT: LINWOOD (85%)
THE LINWOOD COMPONENT MAKES UP 85 PERCENT OF THE MAP UNIT. SLOPES ARE 0 TO 2 PERCENT. THIS COMPONENT IS ON BOGS. THE PARENT MATERIAL CONSISTS OF ORGANIC MATERIAL OVER MINERAL MATERIAL LOAMY. DEPTH TO A ROOT RESTRICTIVE LAYER IS GREATER THAN 60 INCHES. THE NATURAL DRAINAGE CLASS IS VERY POORLY DRAINED. WATER MOVEMENT IN THE MOST RESTRICTIVE LAYER IS MODERATELY HIGH. AVAILABLE WATER TO A DEPTH OF 60 INCHES IS VERY HIGH. SHRINK-SWELL POTENTIAL IS LOW. THIS SOIL IS FREQUENTLY FLOODED. IT IS FREQUENTLY PONDED. A SEASONAL ZONE OF WATER SATURATION IS AT 6 INCHES DURING JANUARY, FEBRUARY, MARCH, APRIL, MAY, JUNE, NOVEMBER, DECEMBER. ORGANIC MATTER CONTENT IN THE SURFACE HORIZON IS ABOUT 54 PERCENT. NONIRRIGATED LAND CAPABILITY CLASSIFICATION IS 2W. THIS SOIL MEETS HYDRIC CRITERIA. THE CALCIUM CARBONATE EQUIVALENT WITHIN 40 INCHES, TYPICALLY, DOES NOT EXCEED 15 PERCENT.

MAP UNIT: LY--LURAY SILTY CLAY LOAM
COMPONENT: LURAY (90%)
THE LURAY COMPONENT MAKES UP 90 PERCENT OF THE MAP UNIT. SLOPES ARE 0 TO 2 PERCENT. THIS COMPONENT IS ON DEPRESSIONS. THE PARENT MATERIAL CONSISTS OF LACUSTRINE DEPOSITS. DEPTH TO A ROOT RESTRICTIVE LAYER IS GREATER THAN 60 INCHES. THE NATURAL DRAINAGE CLASS IS VERY POORLY DRAINED. WATER MOVEMENT IN THE MOST RESTRICTIVE LAYER IS MODERATELY HIGH. AVAILABLE WATER TO A DEPTH OF 60 INCHES IS VERY HIGH. SHRINK-SWELL POTENTIAL IS MODERATE. THIS SOIL IS NOT FLOODED. IT IS FREQUENTLY PONDED. A SEASONAL ZONE OF WATER SATURATION IS AT 6 INCHES DURING JANUARY, FEBRUARY, MARCH, APRIL, MAY, JUNE, JULY, NOVEMBER, DECEMBER. ORGANIC MATTER CONTENT IN THE SURFACE HORIZON IS ABOUT 6 PERCENT. NONIRRIGATED LAND CAPABILITY CLASSIFICATION IS 2W. THIS SOIL MEETS HYDRIC CRITERIA.

MAP UNIT: MCB--MECHANICSBURG SILT LOAM, 2 TO 6 PERCENT SLOPES
COMPONENT: MECHANICSBURG (85%)
THE MECHANICSBURG COMPONENT MAKES UP 85 PERCENT OF THE MAP UNIT. SLOPES ARE 2 TO 6 PERCENT. THIS COMPONENT IS ON RIDGES ON UPLANDS. THE PARENT MATERIAL CONSISTS OF TILL OVER RESIDUUM WEATHERED FROM SANDSTONE AND SILTSTONE. DEPTH TO A ROOT RESTRICTIVE LAYER, BEDROCK (PARALITHIC), IS 40 TO 72 INCHES. THE NATURAL DRAINAGE CLASS IS WELL DRAINED. WATER MOVEMENT IN THE MOST RESTRICTIVE LAYER IS MODERATELY HIGH. AVAILABLE WATER TO A DEPTH OF 60 INCHES IS MODERATE. SHRINK-SWELL POTENTIAL IS LOW. THIS SOIL IS NOT FLOODED. IT IS NOT PONDED. THERE IS NO ZONE OF WATER SATURATION WITHIN A DEPTH OF 72 INCHES. ORGANIC MATTER CONTENT IN THE SURFACE HORIZON IS ABOUT 2 PERCENT. NONIRRIGATED LAND CAPABILITY CLASSIFICATION IS 2E. THIS SOIL DOES NOT MEET HYDRIC CRITERIA.

MAP UNIT: MCC2--MECHANICSBURG SILT LOAM, 6 TO 12 PERCENT SLOPES, ERODED
COMPONENT: MECHANICSBURG (85%)
THE MECHANICSBURG COMPONENT MAKES UP 85 PERCENT OF THE MAP UNIT. SLOPES ARE 6 TO 12 PERCENT. THIS COMPONENT IS ON RIDGES ON UPLANDS. THE PARENT MATERIAL CONSISTS OF TILL OVER RESIDUUM WEATHERED FROM SANDSTONE AND SILTSTONE. DEPTH TO A ROOT RESTRICTIVE LAYER, BEDROCK, PARALITHIC, IS 40 TO 72 INCHES. THE NATURAL DRAINAGE CLASS IS WELL DRAINED. WATER MOVEMENT IN THE MOST RESTRICTIVE LAYER IS MODERATELY HIGH. AVAILABLE WATER TO A DEPTH OF 60 INCHES IS MODERATE. SHRINK-SWELL POTENTIAL IS LOW. THIS SOIL IS NOT FLOODED. IT IS NOT PONDED. THERE IS NO ZONE OF WATER SATURATION WITHIN A DEPTH OF 72 INCHES. ORGANIC MATTER CONTENT IN THE SURFACE HORIZON IS ABOUT 2 PERCENT. NONIRRIGATED LAND CAPABILITY CLASSIFICATION IS 3E. THIS SOIL DOES NOT MEET HYDRIC CRITERIA.

MAP UNIT: MCD--MECHANICSBURG SILT LOAM, 12 TO 18 PERCENT SLOPES
COMPONENT: MECHANICSBURG (85%)
THE MECHANICSBURG COMPONENT MAKES UP 85 PERCENT OF THE MAP UNIT. SLOPES ARE 12 TO 18 PERCENT. THIS COMPONENT IS ON HILLSIDES. THE PARENT MATERIAL CONSISTS OF TILL OVER RESIDUUM WEATHER FROM SANDSTONE AND SILTSTONE. DEPTH TO A ROOT RESTRICTIVE LAYER, BEDROCK (PARALITHIC), IS 40 TO 72 INCHES. THE NATURAL DRAINAGE CLASS IS WELL DRAINED. WATER MOVEMENT IN THE MOST RESTRICTIVE LAYER IS MODERATELY HIGH. AVAILABLE WATER TO A DEPTH OF 60 INCHES IS MODERATE. SHRINK-SWELL POTENTIAL IS LOW. THIS SOIL IS NOT FLOODED. IT IS NOT PONDED. THERE IS NO ZONE OF WATER SATURATION WITHIN A DEPTH OF 72 INCHES. ORGANIC MATTER CONTENT IN THE SURFACE HORIZON IS ABOUT 2 PERCENT. NONIRRIGATED LAND CAPABILITY CLASSIFICATION IS 4E. THIS SOIL DOES NOT MEET HYDRIC CRITERIA.

MAP UNIT: MD--MELVIN SILT LOAM, FREQUENTLY FLOODED
COMPONENT: MELVIN (90%)
THE MELVIN COMPONENT MAKES UP 90 PERCENT OF THE MAP UNIT. SLOPES ARE 0 TO 2 PERCENT. THIS COMPONENT IS ON FLOOD PLAINS. THE PARENT MATERIAL CONSISTS OF ALLUVIUM. DEPTH TO A ROOT RESTRICTIVE LAYER IS GREATER THAN 60 INCHES. THE NATURAL DRAINAGE CLASS IS POORLY DRAINED. WATER MOVEMENT IN THE MOST RESTRICTIVE LAYER IS MODERATELY HIGH. AVAILABLE WATER TO A DEPTH OF 60 INCHES IS VERY HIGH. SHRINK-SWELL POTENTIAL IS LOW. THIS SOIL IS FREQUENTLY FLOODED. IT IS NOT PONDED. A SEASONAL ZONE OF WATER SATURATION IS AT 6 INCHES DURING JANUARY, FEBRUARY, MARCH, APRIL, MAY, DECEMBER. ORGANIC MATTER CONTENT IN THE SURFACE HORIZON IS ABOUT 2 PERCENT. NONIRRIGATED LAND CAPABILITY CLASSIFICATION IS 3W. THIS SOIL MEETS HYDRIC CRITERIA.

MAP UNIT: MTB--MITIWANGA SILT LOAM, 1 TO 4 PERCENT SLOPES
COMPONENT: MITIWANGA (90%)
THE MITIWANGA COMPONENT MAKES UP 90 PERCENT OF THE MAP UNIT. SLOPES ARE 1 TO 4 PERCENT. THIS COMPONENT IS ON DRAINAGEWAYS. THE PARENT MATERIAL CONSISTS OF TILL. DEPTH TO A ROOT RESTRICTIVE LAYER, BEDROCK (LITHIC), IS 20 TO 40 INCHES. THE NATURAL DRAINAGE CLASS IS SOMEWHAT POORLY DRAINED. WATER MOVEMENT IN THE MOST RESTRICTIVE LAYER IS MODERATELY HIGH. AVAILABLE WATER TO A DEPTH OF 60 INCHES IS LOW. SHRINK-SWELL POTENTIAL IS MODERATE. THIS SOIL IS NOT FLOODED. IT IS NOT PONDED. A SEASONAL ZONE OF WATER SATURATION IS AT 21 INCHES DURING JANUARY, FEBRUARY, MARCH, APRIL, MAY, JUNE, NOVEMBER, DECEMBER. ORGANIC MATTER CONTENT IN THE SURFACE HORIZON IS ABOUT 3 PERCENT. NONIRRIGATED LAND CAPABILITY CLASSIFICATION IS 2E. THIS SOIL DOES NOT MEET HYDRIC CRITERIA.

MAP UNIT: OR--ORRVILLE SILT LOAM, OCCASIONALLY FLOODED
COMPONENT: ORRVILLE (85%)
THE ORRVILLE COMPONENT MAKES UP 85 PERCENT OF THE MAP UNIT. SLOPES ARE 0 TO 2 PERCENT. THIS COMPONENT IS ON FLOOD PLAINS. THE PARENT MATERIAL CONSISTS OF ALLUVIUM. DEPTH TO A ROOT RESTRICTIVE LAYER IS GREATER THAN 60 INCHES. THE NATURAL DRAINAGE CLASS IS SOMEWHAT POORLY DRAINED. WATER MOVEMENT IN THE MOST RESTRICTIVE LAYER IS MODERATELY HIGH. AVAILABLE WATER TO A DEPTH OF 60 INCHES IS HIGH. SHRINK-SWELL POTENTIAL IS LOW. THIS SOIL IS OCCASIONALLY FLOODED. IT IS NOT PONDED. A SEASONAL ZONE OF WATER SATURATION IS AT 21 INCHES DURING JANUARY, FEBRUARY, MARCH, APRIL, MAY, JUNE, NOVEMBER, DECEMBER. ORGANIC MATTER CONTENT IN THE SURFACE HORIZON IS ABOUT 3 PERCENT. NONIRRIGATED LAND CAPABILITY CLASSIFICATION IS 2W. THIS SOIL DOES NOT MEET HYDRIC CRITERIA.

MAP UNIT: OTB--OSHTEMO SANDY LOAM, 2 TO 6 PERCENT SLOPES
COMPONENT: OSHTEMO (85%)
THE OSHTEMO COMPONENT MAKES UP 85 PERCENT OF THE MAP UNIT. SLOPES ARE 2 TO 6 PERCENT. THIS COMPONENT IS ON TERRACES ON VALLEYS. THE PARENT MATERIAL CONSISTS OF GLACIOFLUVIAL DEPOSITS. DEPTH TO A ROOT RESTRICTIVE LAYER IS GREATER THAN 60 INCHES. THE NATURAL DRAINAGE CLASS IS WELL DRAINED. WATER MOVEMENT IN THE MOST RESTRICTIVE LAYER IS HIGH. AVAILABLE WATER TO A DEPTH OF 60 INCHES IS MODERATE. SHRINK-SWELL POTENTIAL IS LOW. THIS SOIL IS NOT FLOODED. IT IS NOT PONDED. THERE IS NO ZONE OF WATER SATURATION WITHIN A DEPTH OF 72 INCHES. ORGANIC MATTER CONTENT IN THE SURFACE HORIZON IS ABOUT 2 PERCENT. NONIRRIGATED LAND CAPABILITY CLASSIFICATION IS 3S. IRRIGATED LAND CAPABILITY CLASSIFICATION IS 3E. THIS SOIL DOES NOT MEET HYDRIC CRITERIA.

MAP UNIT: RGB--RAWSON SILT LOAM, 2 TO 6 PERCENT SLOPES
COMPONENT: RAWSON (90%)
THE RAWSON COMPONENT MAKES UP 90 PERCENT OF THE MAP UNIT. SLOPES ARE 2 TO 6 PERCENT. THIS COMPONENT IS ON OUTWASH PLAINS. THE PARENT MATERIAL CONSISTS OF LOAMY GLACIOFLUVIAL DEPOSITS OVER LACUSTRINE DEPOSITS AND/OR TILL. DEPTH TO A ROOT RESTRICTIVE LAYER IS GREATER THAN 60 INCHES. THE NATURAL DRAINAGE CLASS IS MODERATELY WELL DRAINED. WATER MOVEMENT IN THE MOST RESTRICTIVE LAYER IS LOW. AVAILABLE WATER TO A DEPTH OF 60 INCHES IS MODERATE. SHRINK-SWELL POTENTIAL IS LOW. THIS SOIL IS NOT FLOODED. IT IS NOT PONDED. A SEASONAL ZONE OF WATER SATURATION IS AT 39 INCHES DURING JANUARY, FEBRUARY, MARCH, APRIL. ORGANIC MATTER CONTENT IN THE SURFACE HORIZON IS ABOUT 2 PERCENT. NONIRRIGATED LAND CAPABILITY CLASSIFICATION IS 2E. THIS SOIL DOES NOT MEET HYDRIC CRITERIA. THE CALCIUM CARBONATE EQUIVALENT WITHIN 40 INCHES, TYPICALLY, DOES NOT EXCEED 15 PERCENT.

MAP UNIT: RSB--RITTMAN SILT LOAM, 2 TO 6 PERCENT SLOPES
COMPONENT: RITTMAN (90%)
THE RITTMAN COMPONENT MAKES UP 90 PERCENT OF THE MAP UNIT. SLOPES ARE 2 TO 6 PERCENT. THIS COMPONENT IS ON DRAINAGEWAYS ON UPLANDS. THE PARENT MATERIAL CONSISTS OF TILL. DEPTH TO A ROOT RESTRICTIVE LAYER, FRAGIPAN, IS 18 TO 32 INCHES. THE NATURAL DRAINAGE CLASS IS MODERATELY WELL DRAINED. WATER MOVEMENT IN THE MOST RESTRICTIVE LAYER IS MODERATELY HIGH. AVAILABLE WATER TO A DEPTH OF 60 INCHES IS LOW. SHRINK-SWELL POTENTIAL IS MODERATE. THIS SOIL IS NOT FLOODED. IT IS NOT PONDED. A SEASONAL ZONE OF WATER SATURATION IS AT 27 INCHES DURING JANUARY, FEBRUARY, MARCH, APRIL, MAY, NOVEMBER, DECEMBER. ORGANIC MATTER CONTENT IN THE SURFACE HORIZON IS ABOUT 2 PERCENT. NONIRRIGATED LAND CAPABILITY CLASSIFICATION IS 2E. THIS SOIL DOES NOT MEET HYDRIC CRITERIA.

MAP UNIT: RSB2--RITTMAN SILT LOAM, 2 TO 6 PERCENT SLOPES, ERODED
COMPONENT: RITTMAN (90%)
THE RITTMAN COMPONENT MAKES UP 90 PERCENT OF THE MAP UNIT. SLOPES ARE 2 TO 6 PERCENT. THIS COMPONENT IS ON DRAINAGEWAYS. THE PARENT MATERIAL CONSISTS OF TILL. DEPTH TO A ROOT RESTRICTIVE LAYER, FRAGIPAN, IS 18 TO 32 INCHES. THE NATURAL DRAINAGE CLASS IS MODERATELY WELL DRAINED. WATER MOVEMENT IN THE MOST RESTRICTIVE LAYER IS MODERATELY HIGH. AVAILABLE WATER TO A DEPTH OF 60 INCHES IS LOW. SHRINK-SWELL POTENTIAL IS MODERATE. THIS SOIL IS NOT FLOODED. IT IS NOT PONDED. A SEASONAL ZONE OF WATER SATURATION IS AT 27 INCHES DURING JANUARY, FEBRUARY, MARCH, APRIL, MAY, NOVEMBER, DECEMBER. ORGANIC MATTER CONTENT IN THE SURFACE HORIZON IS ABOUT 2 PERCENT. NONIRRIGATED LAND CAPABILITY CLASSIFICATION IS 2E. THIS SOIL DOES NOT MEET HYDRIC CRITERIA.

MAP UNIT: RSC--RITTMAN SILT LOAM, 6 TO 12 PERCENT SLOPES
COMPONENT: RITTMAN (90%)
THE RITTMAN COMPONENT MAKES UP 90 PERCENT OF THE MAP UNIT. SLOPES ARE 6 TO 12 PERCENT. THIS COMPONENT IS ON HILLS ON UPLANDS. THE PARENT MATERIAL CONSISTS OF TILL. DEPTH TO A ROOT RESTRICTIVE LAYER, FRAGIPAN, IS 18 TO 32 INCHES. THE NATURAL DRAINAGE CLASS IS MODERATELY WELL DRAINED. WATER MOVEMENT IN THE MOST RESTRICTIVE LAYER IS MODERATELY HIGH. AVAILABLE WATER TO A DEPTH OF 60 INCHES IS LOW. SHRINK-SWELL POTENTIAL IS MODERATE. THIS SOIL IS NOT FLOODED. IT IS NOT PONDED. A SEASONAL ZONE OF WATER SATURATION IS AT 27 INCHES DURING JANUARY, FEBRUARY, MARCH, APRIL, MAY, NOVEMBER, DECEMBER. ORGANIC MATTER CONTENT IN THE SURFACE HORIZON IS ABOUT 2 PERCENT. NONIRRIGATED LAND CAPABILITY CLASSIFICATION IS 3E. THIS SOIL DOES NOT MEET HYDRIC CRITERIA.

MAP UNIT: RSC2--RITTMAN SILT LOAM, 6 TO 12 PERCENT SLOPES, ERODED
COMPONENT: RITTMAN (90%)
THE RITTMAN COMPONENT MAKES UP 90 PERCENT OF THE MAP UNIT. SLOPES ARE 6 TO 12 PERCENT. THIS COMPONENT IS ON HILLS ON UPLANDS. THE PARENT MATERIAL CONSISTS OF TILL. DEPTH TO A ROOT RESTRICTIVE LAYER, FRAGIPAN, IS 18 TO 32 INCHES. THE NATURAL DRAINAGE CLASS IS MODERATELY WELL DRAINED. WATER MOVEMENT IN THE MOST RESTRICTIVE LAYER IS MODERATELY HIGH. AVAILABLE WATER TO A DEPTH OF 60 INCHES IS LOW. SHRINK-SWELL POTENTIAL IS MODERATE. THIS SOIL IS NOT FLOODED. IT IS NOT PONDED. A SEASONAL ZONE OF WATER SATURATION IS AT 27 INCHES DURING JANUARY, FEBRUARY, MARCH, APRIL, MAY, NOVEMBER, DECEMBER. ORGANIC MATTER CONTENT IN THE SURFACE HORIZON IS ABOUT 2 PERCENT. NONIRRIGATED LAND CAPABILITY CLASSIFICATION IS 3E. THIS SOIL DOES NOT MEET HYDRIC CRITERIA.

MAP UNIT: RSD2--RITTMAN SILT LOAM, 12 TO 18 PERCENT SLOPES, ERODED
COMPONENT: RITTMAN (90%)
THE RITTMAN COMPONENT MAKES UP 90 PERCENT OF THE MAP UNIT. SLOPES ARE 12 TO 18 PERCENT. THIS COMPONENT IS ON HILLSIDES ON UPLANDS. THE PARENT MATERIAL CONSISTS OF TILL. DEPTH TO A ROOT RESTRICTIVE LAYER, FRAGIPAN, IS 18 TO 32 INCHES. THE NATURAL DRAINAGE CLASS IS MODERATELY WELL DRAINED. WATER MOVEMENT IN THE MOST RESTRICTIVE LAYER IS MODERATELY HIGH. AVAILABLE WATER TO A DEPTH OF 60 INCHES IS LOW. SHRINK-SWELL POTENTIAL IS MODERATE. THIS SOIL IS NOT FLOODED. IT IS NOT PONDED. A SEASONAL ZONE OF WATER SATURATION IS AT 27 INCHES DURING JANUARY, FEBRUARY, MARCH, APRIL, MAY, NOVEMBER, DECEMBER. ORGANIC MATTER CONTENT IN THE SURFACE HORIZON IS ABOUT 2 PERCENT. NONIRRIGATED LAND CAPABILITY CLASSIFICATION IS 4E. THIS SOIL DOES NOT MEET HYDRIC CRITERIA.

MAP UNIT: SB--SEBRING SILT LOAM
COMPONENT: SEBRING (90%)
THE SEBRING COMPONENT MAKES UP 90 PERCENT OF THE MAP UNIT. SLOPES ARE 0 TO 2 PERCENT. THIS COMPONENT IS ON FLATS. THE PARENT MATERIAL CONSISTS OF LACUSTRINE DEPOSITS. DEPTH TO A ROOT RESTRICTIVE LAYER IS GREATER THAN 60 INCHES. THE NATURAL DRAINAGE CLASS IS POORLY DRAINED. WATER MOVEMENT IN THE MOST RESTRICTIVE LAYER IS MODERATELY HIGH. AVAILABLE WATER TO A DEPTH OF 60 INCHES IS HIGH. SHRINK-SWELL POTENTIAL IS MODERATE. THIS SOIL IS NOT FLOODED. IT IS FREQUENTLY PONDED. A SEASONAL ZONE OF WATER SATURATION IS AT 6 INCHES DURING JANUARY, FEBRUARY, MARCH, APRIL, MAY, JUNE, NOVEMBER, DECEMBER. ORGANIC MATTER CONTENT IN THE SURFACE HORIZON IS ABOUT 4 PERCENT. NONIRRIGATED LAND CAPABILITY CLASSIFICATION IS 3W. THIS SOIL MEETS HYDRIC CRITERIA.

MAP UNIT: TG--TIOGA SILT LOAM, OCCASIONALLY FLOODED
COMPONENT: TIOGA (100%)
THE TIOGA COMPONENT MAKES UP 100 PERCENT OF THE MAP UNIT. SLOPES ARE 0 TO 2 PERCENT. THIS COMPONENT IS ON FLOOD PLAINS. THE PARENT MATERIAL CONSISTS OF ALLUVIUM. DEPTH TO A ROOT RESTRICTIVE LAYER IS GREATER THAN 60 INCHES. THE NATURAL DRAINAGE CLASS IS WELL DRAINED. WATER MOVEMENT IN THE MOST RESTRICTIVE LAYER IS MODERATELY HIGH. AVAILABLE WATER TO A DEPTH OF 60 INCHES IS MODERATE. SHRINK-SWELL POTENTIAL IS LOW. THIS SOIL IS OCCASIONALLY FLOODED. IT IS NOT PONDED. A SEASONAL ZONE OF WATER SATURATION IS AT 54 INCHES DURING FEBRUARY, MARCH, APRIL. ORGANIC MATTER CONTENT IN THE SURFACE HORIZON IS ABOUT 4 PERCENT. NONIRRIGATED LAND CAPABILITY CLASSIFICATION IS 1. THIS SOIL DOES NOT MEET HYDRIC CRITERIA.

MAP UNIT: UD--UDORTHENTS, LOAMY
COMPONENT: UDORTHENTS (100%)
THE UDORTHENTS COMPONENT MAKES UP 100 PERCENT OF THE MAP UNIT. SLOPES ARE DEPTH TO A ROOT RESTRICTIVE LAYER IS GREATER THAN 60 INCHES. AVAILABLE WATER TO A DEPTH OF 60 INCHES IS VERY LOW. SHRINK-SWELL POTENTIAL IS LOW. THIS SOIL IS NOT FLOODED. IT IS NOT PONDED. THERE IS NO ZONE OF WATER SATURATION WITHIN A DEPTH OF 72 INCHES.

MAP UNIT: WAB--WADSWORTH SILT LOAM, 2 TO 6 PERCENT SLOPES
COMPONENT: WADSWORTH (90%)
THE WADSWORTH COMPONENT MAKES UP 90 PERCENT OF THE MAP UNIT. SLOPES ARE 2 TO 6 PERCENT. THIS COMPONENT IS ON DRAINAGEWAYS. THE PARENT MATERIAL CONSISTS OF TILL. DEPTH TO A ROOT RESTRICTIVE LAYER, FRAGIPAN, IS 18 TO 30 INCHES. THE NATURAL DRAINAGE CLASS IS SOMEWHAT POORLY DRAINED. WATER MOVEMENT IN THE MOST RESTRICTIVE LAYER IS MODERATELY HIGH. AVAILABLE WATER TO A DEPTH OF 60 INCHES IS LOW. SHRINK-SWELL POTENTIAL IS LOW. THIS SOIL IS NOT FLOODED. IT IS NOT PONDED. A SEASONAL ZONE OF WATER SATURATION IS AT 18 INCHES DURING JANUARY, FEBRUARY, MARCH, APRIL, MAY, JUNE, NOVEMBER, DECEMBER. ORGANIC MATTER CONTENT IN THE SURFACE HORIZON IS ABOUT 3 PERCENT. NONIRRIGATED LAND CAPABILITY CLASSIFICATION IS 3E. THIS SOIL DOES NOT MEET HYDRIC CRITERIA.

MAP UNIT: WC--WALLKILL SILT LOAM
COMPONENT: WALLKILL (85%)
THE WALLKILL COMPONENT MAKES UP 85 PERCENT OF THE MAP UNIT. SLOPES ARE 0 TO 2 PERCENT. THIS COMPONENT IS ON CLOSED DEPRESSIONS ON UPLANDS. THE PARENT MATERIAL CONSISTS OF ORGANIC MATERIAL AND/OR ALLUVIUM OVER GLACIOLACUSTRINE DEPOSITS. DEPTH TO A ROOT RESTRICTIVE LAYER IS GREATER THAN 60 INCHES. THE NATURAL DRAINAGE CLASS IS VERY POORLY DRAINED. WATER MOVEMENT IN THE MOST RESTRICTIVE LAYER IS MODERATELY HIGH. AVAILABLE WATER TO A DEPTH OF 60 INCHES IS VERY HIGH. SHRINK-SWELL POTENTIAL IS LOW. THIS SOIL IS FREQUENTLY FLOODED. IT IS NOT PONDED. A SEASONAL ZONE OF WATER SATURATION IS AT 3 INCHES DURING JANUARY, FEBRUARY, MARCH, APRIL, MAY, JUNE, SEPTEMBER, OCTOBER, NOVEMBER, DECEMBER. ORGANIC MATTER CONTENT IN THE SURFACE HORIZON IS ABOUT 5 PERCENT. NONIRRIGATED LAND CAPABILITY CLASSIFICATION IS 3W. THIS SOIL MEETS HYDRIC CRITERIA.

STV
Douglassville, PA Houston, TX Baltimore, MD Williamsport, PA

THE LOCATION OF THE PIPELINE FACILITIES AS SHOWN HEREON MUST BE CONSIDERED AS APPROXIMATE ONLY. BEFORE DIGGING OR FOR AN EXACT LOCATION PLEASE CONTACT YOUR STATES UNDERGROUND UTILITY LOCATION SERVICE.

| ENGINEERING RECORD | |
|---|---|
| DRAWN BY | RFT |
| CHECKED BY | CDA |
| APPROVED BY | BJB |
| DATE | XYZ |
| SCALE | AS NOTED |

OLD DRAWING NO.

| REV. | DATE | APP# | DESCRIPTION | APPROVAL |
|---|---|---|---|---|

INLAND CORPORATION

12-INCH TIFFIN JCT TO EASTON JCT
ALLEGHENY ACCESS PIPELINE PROJECT
EROSION AND SEDIMENTATION
CONTROL NOTES

SENECA, HURON, ASHLAND AND WAYNE COUNTIES, OHIO

DWG. NO. 38-15486-TE-818

REV. NO. 0

CONSTRUCTION SEQUENCE

REMOVAL OF EXISTING GROUND COVER, INSTALLATION OF PIPELINES, AND FINAL STABILIZATION OF THE SITE WILL BE PERFORMED IN ACCORDANCE WITH SUNOCO PIPELINE CONSTRUCTION SPECIFICATIONS AND THE EROSION AND SEDIMENTATION CONTROL PLANS. THE CONSTRUCTION SEQUENCE IS INCLUDED ON THE EROSION AND SEDIMENTATION CONTROL PLANS AND IN THIS NARRATIVE.

THE CONTROL FACILITIES FOR THE SITE WORK INCLUDE SILT SOXX, SILT FENCE, DESILTING BAGS, WATER BARS, CLEAN WATER DIVERSIONS, ROCK CONSTRUCTION ENTRANCES, TRENCH PLUGS, ROCK ENERGY DISSIPATERS AND APPROPRIATE SEEDING/ REVEGETATION OF DISTURBED AREAS.

CONTRACTORS MAY STORE EQUIPMENT, MATERIALS AND CONSTRUCTION TRAILERS WITHIN THE TEMPORARY WORKSPACE. . REFER TO THE EROSION AND SEDIMENTATION CONTROL PLAN DRAWINGS (BOUND SEPARATELY), PREPARED BY STV INCORPORATED, FOR ADDITIONAL INFORMATION.

ALL CONTROL MEASURES WILL BE INSTALLED, MAINTAINED AND REMOVED IN ACCORDANCE WITH THE PROCEDURES OUTLINED IN THE "RAINWATER AND LAND DEVELOPMENT," PUBLISHED BY OHIO DEPARTMENT OF NATURAL RESOURCES, DIVISION OF SOIL AND WATER CONSERVATION AND THE OHIO ENVIRONMENTAL PROTECTION AGENCY, CONSTRUCTION SITE INSPECTION CHECKLIST.

THE OVERALL CONSTRUCTION SCHEDULE IS ESTIMATED TO BE OCTOBER 2013 TO MAY 2014. THE ANTICIPATED SEQUENCE OF CONSTRUCTION IS DESCRIBED BELOW:

PHASE I – GENERAL RIGHT-OF-WAY CLEARING MEASURES

1. AT LEAST 48 HOURS BUT NOT MORE THAN 10 WORKING DAYS (EXCLUDING WEEKENDS AND LEGAL HOLIDAYS) PRIOR TO CONSTRUCTION, THE CONTRACTOR SHALL CONTACT THE OHIO UTILITIES PROTECTION SERVICE (811 OR 1-800-362-2764) AND THE OIL AND GAS PRODUCERS UNDERGROUND PROTECTION SERVICE (800-925-0988) FOR LOCATION OF ALL UNDERGROUND UTILITIES.
2. AT LEAST 14 DAYS BEFORE STARTING ANY EARTH DISTURBANCE ACTIVITIES, THE CONTRACTOR SHALL NOTIFY THE OHIO EPA AS FOLLOWS:
   A. SENECA, HURON & ASHLAND COUNTY – NORTHWEST REGIONAL OFFICE – (419) 352-8461
   B. WAYNE, PORTAGE & MAHONING COUNTY – NORTHEAST REGIONAL OFFICE – (330) 963-1200
3. BEFORE IMPLEMENTING ANY REVISIONS TO THE APPROVED EROSION AND SEDIMENTATION CONTROL PLAN OR REVISIONS TO OTHER PLANS WHICH MAY AFFECT THE EFFECTIVENESS OF THE APPROVED E&S PLAN, THE CONTRACTOR MUST RECEIVE APPROVAL OF THE REVISIONS FROM THE DISTRICT OFFICE, OHIO ENVIRONMENTAL PROTECTION AGENCY AS NOTED ABOVE.
4. BEFORE DISPOSING OF SOIL OR RECEIVING BORROW FOR THE SITE, THE CONTRACTOR MUST ASSURE THAT EACH SPOIL OR BORROW AREA HAS APPROVED EROSION AND SEDIMENTATION CONTROL PLAN, WHICH WAS DEVELOPED IN ACCORDANCE WITH OHIO EPA REGULATIONS.
5. ALL CONSTRUCTION AND DEMOLITION DEBRIS (C&DD) WASTE WILL BE DISPOSED OF IN AN OHIO EPA APPROVED C&DD LANDFILL AS REQUIRED BY OHIO REVISED CODE (ORC) 3714. THE CONTRACTOR SHALL NOT BURY, DUMP OR DISCHARGE ANY WASTES AT THE SITE.
6. REMOVE TREES ONLY (DO NOT GRUB) IN RIGHT-OF-WAY AND TEMPORARY WORKSPACE AREAS. ALL TREE MATERIAL SHALL BE REMOVED FROM WITHIN 25 FEET OF AN EXISTING STREAM BANK OR THE 100 YEAR FLOODPLAIN LINE, WHICHEVER IS GREATER. ONLY CLEAR TREES AS NECESSARY.
7. INSTALL ROCK CONSTRUCTION ENTRANCES WHERE SHOWN ON THE DRAWINGS.
8. INSTALL TEMPORARY EROSION AND SEDIMENTATION CONTROL MEASURES ALONG THE PROPOSED ROUTE.
9. GRADE AND PREPARE THE RIGHT-OF-WAY.
10. INSTALL SILTSOXX, SILT FENCE AND ALL OTHER EROSION AND SEDIMENT CONTROL PRACTICES WITHIN THE PROJECT AREA AS INDICATED ON THE DRAWINGS.
11. INSTALL WATERBARS AS SHOWN.
12. TEMPORARY SEED AND MULCH ANY DISTURBED AREA. DO NOT TEMPORARY SEED CONSTRUCTION ACCESS ROADS.
13. PERMANENTLY SEED ALL TOP SOIL STOCK PILES.
14. ALL EARTH DISTURBANCE ACTIVITIES SHALL PROCEED IN ACCORDANCE WITH THE FOLLOWING SEQUENCE. EACH STAGE SHALL BE COMPLETE IN COMPLIANCE WITH THE REGULATIONS, BEFORE ANY SUBSEQUENT STAGE IN INITIATED. CLEARING AND GRUBBING SHALL BE LIMITED ONLY TO THOSE AREAS DESCRIBED IN EACH STAGE.

PHASE II – PIPELINE CONSTRUCTION

STANDARD TRENCHING INSTALLATION

1. GRADE AND TWO-TONE RIGHT-OF-WAY AS REQUIRED.
2. PERFORM STRINGING, WELDING, COATING AND X-RAY OF PIPELINE.
3. EXCAVATE PIPELINE TRENCHES.
4. ALL TOPSOIL SHALL BE STRIPPED TO ELONGATED STOCKPILES ALONG THE EDGE OF THE LIMIT OF DISTURBANCE IN ACCORDANCE WITH THE DETAIL DRAWINGS. ADDITIONAL SUBSOIL SHALL BE STOCKPILED SEPARATELY.
5. UTILIZE DESILTING BAGS FOR DEWATERING THE TRENCH LINE, AS NEEDED. REFER TO PUMP WATER FILTER BAG DETAIL.
6. INSTALL PIPELINE WITH PIPE BEDDING AND INSTALL TRENCH PLUGS AS SHOWN ON THE PLANS.
7. BACKFILL AND COMPACT THE TRENCHES AS INDICATED ON THE TRENCH DETAIL.
8. REMOVE AND DISPOSE OF ANY EXCESS EXCAVATED MATERIALS.
9. STABILIZE DISTURBED AREAS IN ACCORDANCE WITH POST-CONSTRUCTION MEASURES.

TRENCHING WITHIN ALL STREAMS

1. STREAM CROSSINGS WILL BE PERFORMED DURING OPTIMUM DRY CONDITIONS.
2. INSTALL TIMBER MATTING FOR ACCESS.
3. GRUBBING SHALL NOT TAKE PLACE WITHIN 50-FEET FROM THE TOP OF BANK UNTIL ALL MATERIALS REQUIRED TO COMPLETE THE CROSSING ARE ON SITE AND THE PIPE IS READY FOR INSTALLATION.
4. INSTALL STREAM FLUME OR PUMP AROUND BYPASS AND ROCK ENERGY DISSIPATER.
5. PERFORM STRINGING, WELDING, COATING AND X-RAY OF PIPELINE.
6. BEGIN PIPELINE TRENCH EXCAVATION WHEN THE PIPELINE IS WITHIN 10 FEET OF THE TOP OF BANK. STOCKPILE WETLAND TOPSOIL AND SUBSOIL SEPARATELY.
7. UTILIZE DESILTING BAGS TO DEWATERING THE TRENCH LINE, AS NEEDED.
8. INSTALL PIPELINE WITH PIPE BEDDING AND INSTALL TRENCH PLUGS AS SHOWN ON THE PLANS.
9. BACKFILL AND COMPACT THE TRENCH.
10. REMOVE TIMBER MATTING STREAM CROSSING.
11. INSTALL STREAM BANK RESTORATION.
12. REMOVE AND DISPOSE OF ANY EXCESS EXCAVATED MATERIAL.
13. REMOVE STREAM FLUME OR PUMP AROUND BYPASS AND ROCK ENERGY DISSIPATER.
14. STABILIZE DISTURBED AREAS IN ACCORDANCE WITH POST CONSTRUCTION MEASURES.

TRENCHING WITHIN WETLANDS

1. INSTALL TIMBER MATTING FOR ACCESS.
2. PERFORM STRINGING, WELDING, COATING AND X-RAY OF PIPELINE.
3. EXCAVATE PIPELINE TRENCH. STOCKPILE WETLAND TOPSOIL AND SUBSOIL SEPARATELY ON GEOTEXTILE FABRIC.
4. UTILIZE DESILTING BAGS TO DEWATER THE TRENCH LINE, AS NEEDED.
5. INSTALL PIPELINE WITH PIPE BEDDING AND INSTALL TRENCH PLUGS AS SHOWN ON THE PLANS.
6. BACKFILL AND COMPACT THE TRENCH.
7. REMOVE WETLAND MATTING.
8. PERMANENTLY SEED AND MULCH DISTURBED WETLANDS IN ACCORDANCE WITH THE PLAN.

HORIZONTAL DIRECTIONAL DRILLS

1. INSTALL TIMBER MATTING TO PROTECT EXISTING UTILITIES, AS NEEDED.
2. PRIOR TO DRILL RIG SETUP, EXPOSE THE EXISTING GAS PIPELINE AND CONFIRM THE GAS PIPELINES MAINTAIN DESIGNED CLEARANCES FROM ALIGNMENT.
3. PERFORM STRINGING, WELDING, COATING, X-RAY, AND HYDROTESTING OF CARRIER PIPE TO BE INSTALLED BY HORIZONTAL DIRECTIONAL DRILL PRIOR TO PULL-BACK.
4. SET UP DIRECTIONAL DRILL RIG SITE. INSTALL DRILL MUD PIT.
5. EXCAVATE INSPECTION PIT WHERE DRILL PIPE WILL TIE INTO TRENCHED PIPE.
6. BEGIN DIRECTIONAL DRILL, MONITOR FOR SIGNS OF HYDROFRACTURE (FRAC-OUT) OF DRILLING MUD. IF A FRAC-OUT OCCURS, DRILLING WILL BE STOPPED AND THE FRAC-OUT WILL BE CONTAINED AND CLEANED UP.
7. COMPLETE PILOT HOLE. BEGIN REAMING OPERATIONS OF THE HOLE.
8. RE-CIRCULATE DRILL MUD.
9. USE DEWATERING MEASURES AS NEEDED.
10. PERFORM PIPELINE PULL-BACK, INSTALLING THE CARRIER PIPELINE.
11. INSTALL PIPELINE TIE-IN CONNECTIONS PER THE DESIGN PLANS FOLLOWING THE TRENCHED INSTALLATION PROCEDURES.
12. DISPOSE OF DRILL MUD IN AN APPROVED OFF SITE MUD DISPOSAL FACILITY.
13. BACKFILL AND COMPACT ENTRY AND EXIT PITS, REMOVE TIMBER MATS GRADE DISTURBED AREA, PERMANENTLY SEED AND MULCH THE DRILL SETUP AREA AND PULL-BACK AREA.

TESTING, PURGING, TIE-IN PROCEDURES AND CP MITIGATION

1. UPON COMPLETION OF INSTALLATION OF THE ENTIRE PROJECT, A CALIPER PIG SHALL BE RUN THROUGH THE PIPELINE AND EVALUATED.
2. PERFORM HYDROTEST OF THE ENTIRE PIPELINE IN ACCORDANCE WITH GENERAL PERMIT OHH000002, GENERAL PERMIT AUTHORIZATION TO DISCHARGE HYDROSTATIC TEST WATER. HYDROSTATIC DISCHARGE WILL BE TRUCKED OFF-SITE.
3. INSTALL PIPELINE CATHODIC PROTECTION SYSTEM.
4. STABILIZE DISTURBED AREAS IN ACCORDANCE WITH POST CONSTRUCTION MEASURES.

POST CONSTRUCTION MEASURES

1. TOPSOIL WILL BE GRADED BACK TO ORIGINAL LOCATION AND THE SITE WILL BE RETURNED TO EXISTING CONDITIONS. (WATER BARS TO REMAIN AFTER STABILIZATION IS ACHIEVED, EXCEPT IN AGRICULTURAL AREAS)
2. DOZER SHALL TRACK ALL STEEP SLOPES.
3. ALL DISTURBED AREAS SHALL BE RETURNED TO EXISTING GRADE, PERMANENTLY SEEDED AND MULCHED.
4. WATER BARS SHALL BE MAINTAINED UNTIL PERMANENT STABILIZATION IS REACHED. WATERBARS SHALL BE INSPECTED FOR WATER BUILD UP AFTER EACH RAIN EVENT. ANY WATER SHALL BE REMOVED AND WATER BAR SHALL BE REPLACED/ RESLOPED TO PREVENT FURTHER WATER BUILD UP.
5. UPON STABILIZATION, REMOVE ALL PERIMETER SILTSOXX OR SILT FENCE AND ALL OTHER EROSION CONTROL MEASURES. WATER BARS ARE TO REMAIN AFTER STABILIZATION IS ACHIEVED, EXCEPT IN AGRICULTURAL AREAS.
6. PERMANENTLY SEED AND MULCH ALL REMAINING DISTURBED AREAS.
7. ALL TEMPORARY ROCK CONSTRUCTION ENTRANCES SHALL BE REMOVED AND RESTORED.

STV
Douglassville, PA Houston, TX Baltimore, MD Williamsport, PA

THE LOCATION OF THE PIPELINE FACILITIES AS SHOWN HEREON MUST BE CONSIDERED AS APPROXIMATE ONLY. BEFORE DIGGING OR FOR AN EXACT LOCATION PLEASE CONTACT YOUR STATES UNDERGROUND UTILITY LOCATION SERVICE.

| ENGINEERING RECORD | |
|---|---|
| DRAWN BY | RFT |
| CHECKED BY | CDA |
| APPROVED BY | BJB |
| DATE | XYZ |
| SCALE | AS NOTED |
| | |
| | |

OLD DRAWING NO.

| REV. | DATE | APP# | DESCRIPTION | APPROVAL |
|---|---|---|---|---|

INLAND CORPORATION

12-INCH TIFFIN JCT TO EASTON JCT
ALLEGHENY ACCESS PIPELINE PROJECT
EROSION AND SEDIMENTATION
CONTROL NOTES

SENECA, HURON, ASHLAND AND WAYNE COUNTIES, OHIO

DWG. NO. 38-15486-TE-819

REV. NO. 0

| | | | | Riprap | | | | | Erosion Control Matting |
|---|---|---|---|---|---|---|---|---|---|
| County | Stream | Approximate Station | Velocity of 10-yr 24-hr flow in channel (ft/sec) | Riprap Type (ODOT) | Max Permissible Velocity (ft/s) | Thickness (Inches) | Filter Stone | Filter Stone Thickness (Inches) | Erosion Control Matting Type, Staple Pattern |
| Seneca | DS-1 | 255+28 | 6.31 | C | 8.0 | 27 | AASHTO #1 | 6 | SC150, D |
| Seneca | DS-3 | 343+05 | 5.26 | D | 6.0 | 18 | AASHTO #3 | 6 | SC250, E |
| Seneca | DS-9 | 508+71 | 8.39 | B | 10.0 | 36 | AASHTO #1 | 6 | SC250, E |
| Seneca | DS-6 | 581+45 | 4.86 | D | 6.0 | 18 | AASHTO #3 | 6 | SC150, D |
| Seneca | DS-5 | 642+20 | 2.51 | D | 6.0 | 18 | AASHTO #3 | 6 | SC250, E |
| Seneca | DS-4 | 667+82 | 2.36 | D | 6.0 | 18 | AASHTO #3 | 6 | SC150, D |
| Seneca | DS-11 | 687+25 | 3.01 | D | 6.0 | 18 | AASHTO #3 | 6 | SC250, E |
| Seneca | Stream 2 | 840+71 | 6.84 | C | 8.0 | 27 | AASHTO #1 | 6 | SC250, E |
| Seneca | CAB | 904+00 | 3.29 | - | - | - | - | - | SC150, D |
| Seneca | CAA | 923+09 | 4.15 | D | 6.0 | 18 | AASHTO #3 | 6 | SC150, D |
| Seneca | CZ | 938+78 | 4.63 | D | 6.0 | 18 | AASHTO #3 | 6 | SC150, D |
| Seneca | CS-12 | 980+22 | 5.56 | D | 6.0 | 18 | AASHTO #3 | 6 | SC150, D |
| Seneca | CS-13 | 1001+16 | 5.00 | D | 6.0 | 18 | AASHTO #3 | 6 | SC150, D |
| Seneca | CV | 1068+00 | 3.49 | D | 6.0 | 18 | AASHTO #3 | 6 | SC150, D |
| Seneca | CU | 1131+66 | 3.99 | D | 6.0 | 18 | AASHTO #3 | 6 | SC150, D |
| Seneca | CS-17 | 1185+57 | 3.46 | D | 6.0 | 18 | AASHTO #3 | 6 | SC150, D |
| Huron | ST-1 | 1203+55 | 3.83 | D | 6.0 | 18 | AASHTO #3 | 6 | SC150, D |
| Huron | CO | 1413+74 | 2.89 | D | 6.0 | 18 | AASHTO #3 | 6 | SC150, D |
| Huron | CS-09 | 1648+83 | 3.97 | D | 6.0 | 18 | AASHTO #3 | 6 | SC150, D |
| Huron | CS-08 | 1663+72 | 3.30 | D | 6.0 | 18 | AASHTO #3 | 6 | SC150, D |
| Huron | CS-07 | 1717+13 | 3.93 | D | 6.0 | 18 | AASHTO #3 | 6 | SC150, D |
| Huron | CS-06 | 1756+13 | 3.35 | D | 6.0 | 18 | AASHTO #3 | 6 | SC150, D |
| Huron | CS-05 | 1975+00 | 6.46 | C | 8.0 | 27 | AASHTO #1 | 6 | SC150, D |
| Huron | CS-04 | 1978+37 | 5.15 | D | 6.0 | 18 | AASHTO #3 | 6 | SC150, D |
| Huron | CS-03 | 1985+71 | 2.81 | D | 6.0 | 18 | AASHTO #3 | 6 | SC150, D |
| Huron | CS-02 | 2009+77 | 5.93 | D | 6.0 | 18 | AASHTO #3 | 6 | SC150, D |
| Huron | CS-01 | 2084+96 | 5.08 | D | 6.0 | 18 | AASHTO #3 | 6 | SC150, D |
| Huron | BS-A | 2143+00 | 3.50 | D | 6.0 | 18 | AASHTO #3 | 6 | SC150, D |
| Huron | BS-E | 2189+72 | 2.42 | D | 6.0 | 18 | AASHTO #3 | 6 | SC150, D |

| | | | | | | | | | |
|---|---|---|---|---|---|---|---|---|---|
| Huron | BS-C | 2201+88 | 2.94 | D | 6.0 | 18 | AASHTO #3 | 6 | SC150, D |
| Huron | BS-D | 2217+51 | 2.35 | D | 6.0 | 18 | AASHTO #3 | 6 | SC150, D |
| Huron | BS-F | 2237+93 | 4.20 | D | 6.0 | 18 | AASHTO #3 | 6 | SC150, D |
| Ashland | BS-G | 9+70 | 4.23 | D | 6.0 | 18 | AASHTO #3 | 6 | SC150, D |
| Ashland | BS-H | 22+65 | 4.16 | D | 6.0 | 18 | AASHTO #3 | 6 | SC250, E |
| Ashland | BS-I | 28+19 | 2.62 | D | 6.0 | 18 | AASHTO #3 | 6 | SC150, D |
| Ashland | BS-M | 119+79 | 2.29 | D | 6.0 | 18 | AASHTO #3 | 6 | SC150, D |
| Ashland | BS-N | 128+11 | 6.35 | C | 8.0 | 27 | AASHTO #1 | 6 | SC250, E |
| Ashland | BS-O | 181+84 | 3.56 | D | 6.0 | 18 | AASHTO #3 | 6 | SC150, D |
| Ashland | BS-P | 237+90 | 4.12 | D | 6.0 | 18 | AASHTO #3 | 6 | SC150, D |
| Ashland | BS-Q | 283+33 | 3.59 | D | 6.0 | 18 | AASHTO #3 | 6 | SC150, D |
| Ashland | BS-R | 321+53 | 3.24 | D | 6.0 | 18 | AASHTO #3 | 6 | SC150, D |
| Ashland | BS-S | 376+01 | 3.11 | D | 6.0 | 18 | AASHTO #3 | 6 | SC150, D |
| Ashland | BS-T | 448+67 | 3.04 | D | 6.0 | 18 | AASHTO #3 | 6 | SC150, D |
| Ashland | BS-U | 466+40 | 4.25 | D | 6.0 | 18 | AASHTO #3 | 6 | SC150, D |
| Ashland | BS-X | 510+17 | 7.53 | C | 8.0 | 27 | AASHTO #1 | 6 | SC250, E |
| Ashland | BS-W | 516+32 | 2.11 | D | 6.0 | 18 | AASHTO #3 | 6 | SC150, D |
| Ashland | BS-V | 523+96 | 1.67 | D | 6.0 | 18 | AASHTO #3 | 6 | SC150, D |
| Ashland | BS-Y | 563+59 | 1.16 | D | 6.0 | 18 | AASHTO #3 | 6 | SC150, D |
| Ashland | BAM | 572+54 | 2.33 | D | 6.0 | 18 | AASHTO #3 | 6 | SC150, D |
| Ashland | DS-17a | 770+79 | 10.13 | A | 12.0 | 45 | AASHTO #1 | 6 | SC250, E |
| Ashland | DS-17 | 803+54 | 5.52 | D | 6.0 | 18 | AASHTO #3 | 6 | SC250, E |
| Ashland | DS-16 | 837+81 | 3.85 | D | 6.0 | 18 | AASHTO #3 | 6 | SC150, D |
| Ashland | DS-18 | 850+83 | 3.74 | D | 6.0 | 18 | AASHTO #3 | 6 | SC150, D |
| Wayne | CS-14 | 940+95 | 6.32 | C | 8.0 | 27 | AASHTO #1 | 6 | SC250, E |
| Wayne | CS-15 | 991+00 | 4.03 | D | 6.0 | 18 | AASHTO #3 | 6 | SC150, D |
| Wayne | Stream 10 | 1005+68 | 2.53 | D | 6.0 | 18 | AASHTO #3 | 6 | SC150, D |
| Wayne | Stream 11 | 1011+29 | 4.91 | D | 6.0 | 18 | AASHTO #3 | 6 | SC150, D |
| Wayne | CS-16 | 1037+37 | 5.59 | D | 6.0 | 18 | AASHTO #3 | 6 | SC250, E |
| Wayne | AS-26 | 1118+60 | 4.29 | D | 6.0 | 18 | AASHTO #3 | 6 | SC150, D |
| Wayne | AS-25 | 1125+75 | 3.33 | D | 6.0 | 18 | AASHTO #3 | 6 | SC150, D |
| Wayne | AS-23 | 1148+70 | 2.79 | D | 6.0 | 18 | AASHTO #3 | 6 | SC150, D |
| Wayne | AS-22 | 1209+10 | 6.01 | D | 6.0 | 18 | AASHTO #3 | 6 | SC150, D |

| | | | | | | | | | |
|---|---|---|---|---|---|---|---|---|---|
| Wayne | AAE | 1239+34 | 3.19 | D | 6.0 | 18 | AASHTO #3 | 6 | SC250, E |
| Wayne | AS-20 | 1259+92 | 4.01 | D | 6.0 | 18 | AASHTO #3 | 6 | SC250, E |
| Wayne | AS-21 | 1269+06 | 4.54 | D | 6.0 | 18 | AASHTO #3 | 6 | SC150, D |
| Wayne | Stream 16 | 1290+85 | 4.81 | D | 6.0 | 18 | AASHTO #3 | 6 | SC150, D |
| Wayne | AS-19 | 1312+36 | 3.42 | D | 6.0 | 18 | AASHTO #3 | 6 | SC150, D |
| Wayne | AS-18 | 1373+30 | 8.20 | B | 10.0 | 36 | AASHTO #1 | 6 | SC250, E |
| Wayne | AS-17 | 1377+90 | 3.38 | D | 6.0 | 18 | AASHTO #3 | 6 | SC150, D |
| Wayne | AS-16 | 1381+51 | 3.07 | D | 6.0 | 18 | AASHTO #3 | 6 | SC150, D |
| Wayne | AS-15 | 1385+58 | 3.70 | D | 6.0 | 18 | AASHTO #3 | 6 | SC150, D |
| Wayne | AS-13 | 1476+83 | 4.68 | D | 6.0 | 18 | AASHTO #3 | 6 | SC150, D |
| Wayne | Stream 19 | 1521+72 | 3.98 | D | 6.0 | 18 | AASHTO #3 | 6 | SC150, D |
| Wayne | AS-11 | 1612+16 | 3.27 | D | 6.0 | 18 | AASHTO #3 | 6 | SC150, D |
| Wayne | AS-10 | 1625+09 | 7.51 | C | 8.0 | 27 | AASHTO #1 | 6 | SC250, E |
| Wayne | MS-03 | 1784+00 | 5.70 | D | 6.0 | 18 | AASHTO #3 | 6 | SC250, E |
| Wayne | MS-01 | 1786+00 | 2.55 | D | 6.0 | 18 | AASHTO #3 | 6 | SC150, D |
| Wayne | MS-02 | 1786+00 | 1.77 | D | 6.0 | 18 | AASHTO #3 | 6 | SC150, D |

* Rip Rap shall extend above the Depth of the Existing Water Surface Elevation as indicated. Riprap shall not exceed the top of bank.