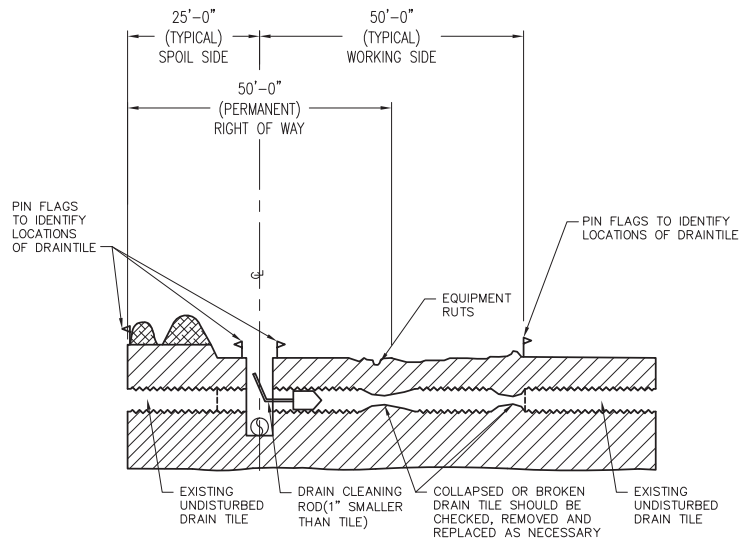

NOTES:

1. CLEAN OUT DRAIN TILES TO THE PERMANENT RIGHT-OF-WAY LIMITS ON THE BACKFILL SIDE AND TO THE TEMPORARY RIGHT-OF-WAY LIMIT ON THE WORKING SIDE.
2. REPLACE DAMAGED TILES AND REPAIR TILES AND JOINTS THAT REQUIRE WORK AND ARE WITHIN THE ARES OF CONSTRUCTION ACTIVITIES.

DRAIN TILE INSPECTION

NO SCALE

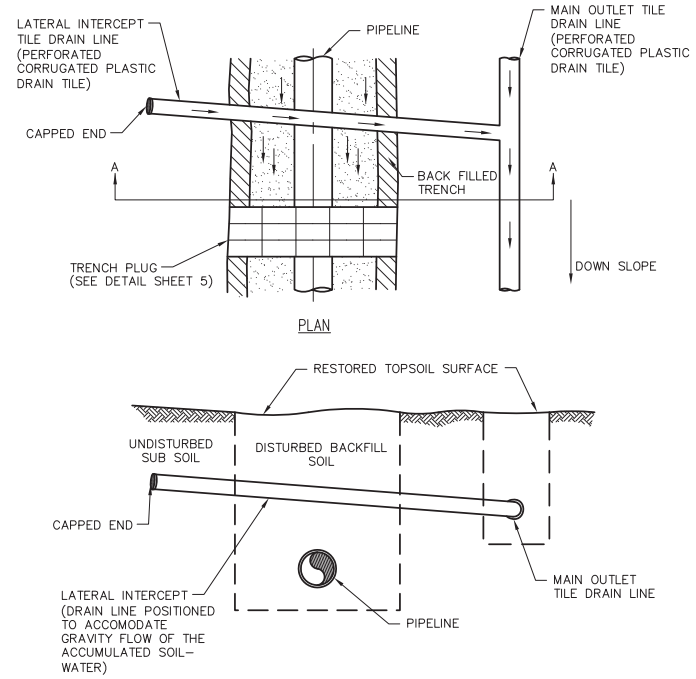

NOTES:

1. TRENCH PLUGS SHALL PREVENT GULLY EROSION WHILE TRENCH IS OPEN AND HELP INHIBIT WATER PIPING WATER PIPING AND WATER BLOWOUTS DOWN THE COURSE OF THE PIPELINE AFTER BACKFILLING.
2. AGRICULTURAL CROPLAND MAY REQUIRE CROSS TRENCH DRAINAGE OR PARALLEL DRAINAGE.

INTERCEPT DRAIN TILE CROSS TRENCH DRAINAGE

NO SCALE

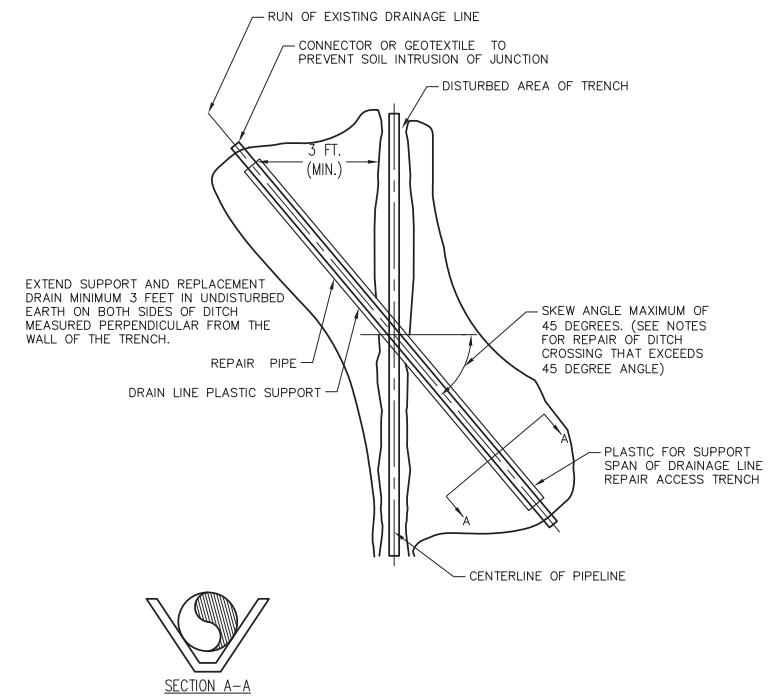

NOTES:

1. PROVIDE A PLASTIC SUPPORT FOR DRAIN TILE OR PLASTIC PIPE TO MAINTAIN FUNCTION WHILE DITCH IS OPEN.
2. SHOULD A DRAIN TILE CROSS A DITCH AT A SKEW OF GREATER THAN 45 DEGREES, THE REPLACEMENT DRAIN IS TO BE RELOCATED INTO UNDISTURBED SOIL OR OUT OF CONFLICT WITH THE PIPELINE DITCH REPLACEMENT DRAIN LINE IS TO BE INSTALLED TO MATCH ELEVATION OF EXISTING DRAIN TILES.

REPAIR OF SEVERED DRAIN TILE PLAN

NO SCALE

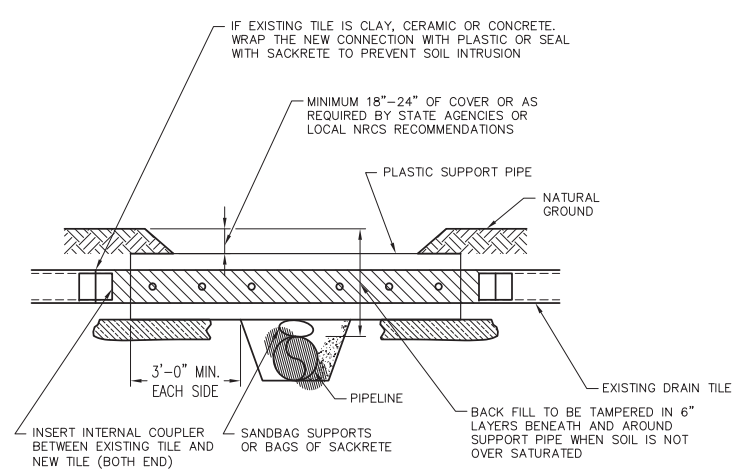

TUBING/PIPE SIZES	
TUBING SIZE	PIPE SIZE
4"	4"
6"	6"
8"	10"
10"	10"
12"	12"
18"	18"

NOTES:

1. ALL PIPE TO BE MINIMUM SCHEDULE 80.
2. PLASTIC DRAIN TUBING AND CORRUGATED PIPE TO BE INSTALLED SO THE HOLES ARE CENTERED ON EACH SIDE OF THE BOTTOM OF THE PIPE.
3. ALL MATERIAL TO BE CONTRACTOR SUPPLIED.
4. THE PERFORMED RIGID SUPPORT PIPE IS SHOULDERED BACK INTO THE FIRM UNDISTURBED SOIL PROFILE TO ENSURE CONSISTENT GRAVITY FLOW GRADIENT OF THE TILE LINE ACROSS THE TRENCH AS THE BACKFILL MATERIAL GRADUALLY SETTLES FOR UP TO TWO LAYERS.

REPAIR OF SEVERED TILE DRAIN DETAIL

NO SCALE

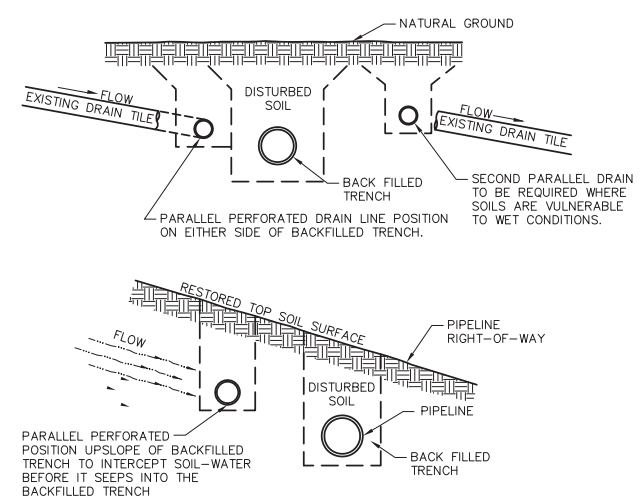

NOTES:

1. PARALLEL DRAINAGE TILE INSTALLATION TO BE APPROVED FOR SITE SPECIFIC AGRICULTURAL SOILS WHERE REPAIR OF EXISTING CROSS TILES WOULD BE LESS EFFECTIVE FOR EXAMPLE:
   a. SHALLOW BEDROCK.
   b. INTERFERENCE BY OTHER UTILITY LINES.
   c. TO HEADER CLOSELY SPACED SHALLOW TILES AND FRENCH DRAINS.

INTERCEPT DRAIN TILE PARALLEL TO TRENCH

NO SCALE

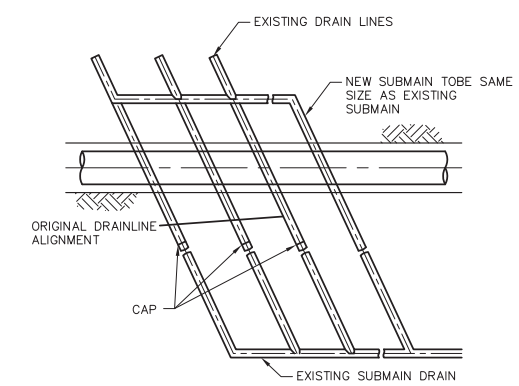

NOTE:

1. TO BE DETERMINED BY AGRICULTURAL SPECIALIST BASE ON SLOPE & DRAINAGE AREA IN CONSULTATION WITH SWCD.

PLAN

TILE SYSTEM WITH NEW SUBMAIN

NO SCALE

STV
Douglassville, PA Houston, TX Baltimore, MD Williamsport, PA

THE LOCATION OF THE PIPELINE FACILITIES AS SHOWN HEREON MUST BE CONSIDERED AS APPROXIMATE ONLY. BEFORE DIGGING OR FOR AN EXACT LOCATION PLEASE CONTACT YOUR STATES UNDERGROUND UTILITY LOCATION SERVICE.

ENGINEERING RECORD	
DRAWN BY	RFT
CHECKED BY	CDA
APPROVED BY	BJB
DATE	XYZ
SCALE	AS NOTED

REV.	DATE	APP#	DESCRIPTION	APPROVAL

Sunoco Logistics Partners L.P.

12-INCH MOGADORE TO VANPORT
ALLEGHENY ACCESS PIPELINE PROJECT
EROSION AND SEDIMENTATION CONTROL DETAILS

PORTAGE, MAHONING AND COLUMBIANA COUNTIES, OHIO

OLD DRAWING NO.

DWG. NO. 38-15486-OH-811

REV. NO. 0

DISPOSAL AND HANDLING OF HAZARDOUS AND OTHER CONSTRUCTION WASTE

DO:

- PREVENT SPILLS
- USE PRODUCTS UP
- FOLLOW LABEL DIRECTIONS FOR DISPOSAL
- REMOVE LIDS FROM EMPTY BOTTLES AND CANS WHEN DISPOSING IN TRASH
- RECYCLE WASTES WHENEVER POSSIBLE

DON'T:

- DON'T POUR INTO WATERWAYS, STORM DRAINS OR ONTO THE GROUND
- DON'T POUR DOWN SINK, FLOOR DRAIN OR SEPTIC TANKS
- DON'T BURY CHEMICALS OR CONTAINERS
- DON'T BURN CHEMICALS OR CONTAINERS
- DON'T MIX CHEMICALS TOGETHER

1. CONSTRUCTION PERSONNEL, INCLUDING SUBCONTRACTORS WHO MAY USE OR HANDLE HAZARDOUS OR TOXIC MATERIALS, SHALL BE MADE AWARE OF THE FOLLOWING GUIDELINES. (LIST ABOVE).
2. CONTAINERS SHALL BE PROVIDED FOR COLLECTION OF ALL WASTE MATERIAL INCLUDING CONSTRUCTION DEBRIS, TRASH, PETROLEUM PRODUCTS AND ANY HAZARDOUS MATERIALS TO BE USED ON SITE. ALL WASTE MATERIAL SHALL BE DISPOSED OF AT FACILITIES APPROVED FOR THAT MATERIAL.
3. NO WASTE MATERIALS SHALL BE BURIED ON SITE. SITE PERSONNEL, INCLUDING SUBCONTRACTORS SHALL BE NOTIFIED THAT NO CONSTRUCTION-RELATED MATERIALS ARE TO BE BURIED ON-SITE.
4. MIXING, PUMPING, TRANSFERRING OR OTHERWISE HANDLING CONSTRUCTION CHEMICALS SUCH AS FERTILIZERS, LIME, ASPHALT, CONCRETE DRYING COMPOUNDS, AND ALL OTHER POTENTIALLY HAZARDOUS MATERIALS SHALL BE PERFORMED IN AN AREA AWAY FROM ANY WATERCOURSE, DITCH OR STORM DRAIN.
5. EQUIPMENT FUELING AND MAINTENANCE, OIL CHANGING, ETC., SHALL BE PERFORMED AWAY FROM WATERCOURSES, DITCHES OR STORM DRAINS, IN AN AREA DESIGNATED FOR THAT PURPOSE. THE DESIGNATED AREA SHALL BE EQUIPPED FOR RECYCLING OIL AND CATCHING SPILLS.
6. CONCRETE WASH WATER SHALL NOT BE ALLOWED TO FLOW TO STREAMS, DITCHES, STORM DRAINS, OR ANY OTHER WATER CONVEYANCE. A SUMP OR PIT SHALL BE CONSTRUCTED IF NEEDED TO CONTAIN CONCRETE WASH WATER.
7. IF HAZARDOUS SUBSTANCES SUCH AS OIL, DIESEL FUEL, HYDRAULIC FLUID, ANTIFREEZE, ETC. ARE SPILLED, LEAKED OR RELEASED ONTO SOIL, THE SOIL SHOULD BE DUG UP AND DISPOSED OF WITH THE TRASH AT A LICENSED SANITARY LANDFILL (NOT A CONSTRUCTION/DEMOLITION DEBRIS LANDFILL). SPILLS ON PAVEMENT SHALL BE ABSORBED WITH SAWDUST OR KITTY LITER AND DISPOSED OF WITH THE TRASH AT A LICENSED SANITARY LANDFILL. HAZARDOUS OR INDUSTRIAL WASTES SUCH AS MOST SOLVENTS, GASOLINE, OIL-BASED PAINTS AND CEMENT CURING COMPOUNDS REQUIRE SPECIAL HANDLING. CONTACT OHIO EPA (1-800-282-9378).
8. SPILLS OF 25 gal. OR MORE OF PETROLEUM PRODUCTS SHALL BE REPORTED TO OHIO EPA (1-800-282-9378), THE LOCAL FIRE DEPARTMENT AND THE LOCAL EMERGENCY PLANNING COMMITTEE WITHIN 30 MINUTES OF THE DISCOVERY OF THE RELEASE.
9. HAZARDOUS OR POLLUTIVE MATERIAL STORAGE AREAS SHALL BE LOCATED AT LEAST 100 FEET BACK FROM THE TOP OF STREAM.

CONSTRUCTION NOTES

A. DESIGN INFORMATION

1. CODES AND STANDARDS

a. ALL CONSTRUCTION SHALL CONFORM TO SUNOCO PIPELINE L.P. ENGINEERING STANDARDS.

B. EXCAVATION AND BACKFILL

1. EXCAVATION

a. LOCATION OF EXISTING UNDERGROUND UTILITIES SHALL BE VERIFIED PRIOR TO EXCAVATION. CONTRACTOR SHALL AVOID DISTURBING FILL MATERIAL AROUND EXISTING UNDERGROUND UTILITIES DURING EXCAVATION OF NEW TRENCH.

b. EXCAVATION SHALL BE PERFORMED IN ACCORDANCE WITH ALL APPLICABLE CODES AND STANDARDS.

c. SUPPORT EXCAVATIONS WITH SHEETING, SHORING, AND BRACING OR A TRENCH BOX AS REQUIRED TO COMPLY WITH FEDERAL AND STATE LAWS AND LOCAL GOVERNING CODES.

d. TRENCHES SHALL BE DEWATERED WHERE REQUIRED. THE CONTRACTOR SHALL AT ALL TIMES PROVIDE AND MAINTAIN PROPER AND SATISFACTORY MEANS AND DEVICES FOR THE REMOVAL OF ALL WATER ENTERING THE EXCAVATIONS, AND SHALL REMOVE ALL SUCH WATER IN ACCORDANCE WITH THE DESILTING BAG DETAIL. DEWATERING SHALL NOT INTERFERE WITH THE EXECUTION OF THE WORK, OR THE PROPER PLACING OF PIPES, OTHER WORK, OR TRAFFIC FLOW ON THE ROADWAY.

e. SEE OWNER SPECIFICATIONS FOR ADDITIONAL INFORMATION.

f. REMOVE ALL EXCESS WASTE MATERIAL AND DISPOSE OFF SITE. THERE WILL BE NO BURNING OR BURYING OF WASTE AT THE PROJECT AREA.

2. BACKFILL

a. BACKFILLING SHALL BE PERFORMED IN ACCORDANCE WITH OWNER SPECIFICATIONS AND ALL APPLICABLE CODES AND STANDARDS.

C. GENERAL

1. ALL CONSTRUCTION SHALL BE IN ACCORDANCE WITH THE CITY OF CUYAHOGA FALLS ORDINANCES AND/OR REGULATIONS, OHIO DEPARTMENT OF NATURAL RESOURCES DIVISION OF SOIL AND WATER RESOURCES "RAINWATER AND LAND DEVELOPMENT" STANDARDS, AND SUNOCO PIPELINE L.P. SPECIFICATIONS.
2. CONTRACTOR SHALL VERIFY HORIZONTAL AND VERTICAL LOCATIONS OF ALL UNDERGROUND FACILITIES DURING THE COURSE OF WORK.
3. ALL DIMENSIONS AND CONDITIONS MUST BE CHECKED AND VERIFIED IN THE FIELD BEFORE STARTING WORK. ANY DISCREPANCY SHALL BE CALLED TO THE ATTENTION OF THE OWNER'S REPRESENTATIVE BEFORE PROCEEDING WITH THE WORK.
4. ANY EXISTING IMPROVEMENTS THAT ARE LOCATED WITHIN THE LIMITS OF WORK AND/OR INTERFERE WITH THE PROSECUTION OF THE WORK SHALL BE REMOVED AND REINSTALLED BY THE CONTRACTOR UNLESS OTHERWISE NOTED ON THE PLANS.
5. MAINTAIN ACCESS TO CONSTRUCTION ENTRANCES.
6. CONSTRUCTION ENTRANCES SHALL BE KEPT FREE OF EXCAVATED MATERIALS AT ALL TIMES.
7. ALL WORK SHALL BE PERFORMED IN ACCORDANCE WITH EROSION AND SEDIMENTATION CONTROL PLANS.
8. REFER TO OWNER'S SPECIFICATIONS FOR STREAM BYPASS REQUIREMENTS.

SOIL EROSION AND SEDIMENTATION CONTROL PLAN

1. THE CONTRACTOR IS REQUIRED TO FULLY COMPLY WITH ALL OF THE RULES AND STANDARDS OF THE OHIO EPA AND SUMMIT SOIL & WATER CONSERVATION DISTRICT, INCLUDING THE CONSTRUCTION AND MAINTENANCE OF EROSION AND SEDIMENTATION CONTROLS AS SPECIFIED IN THE RAINWATER AND LAND DEVELOPMENT MANUAL (2007).
2. CONSTRUCTION OPERATIONS SHALL BE CARRIED OUT IN SUCH A MANNER THAT ALL EROSION, AIR AND WATER POLLUTION IS MINIMIZED. STATE AND LOCAL LAWS CONCERNING POLLUTION ABATEMENT SHALL BE FOLLOWED.
3. THE CONTRACTOR SHALL CONTACT THE APPROPRIATE SOIL & WATER CONSERVATION DISTRICT AT LEAST THREE WORKING DAYS PRIOR TO STARTING WORK. THE TELEPHONE NUMBERS FOR THE APPROPRIATE SOIL & WATER CONSERVATION DISTRICTS ARE LISTED IN THE SPECIFICATIONS. THE CONTRACTOR SHALL SECURE THE APPROVAL OF BOTH THE APPROPRIATE SOIL & WATER CONSERVATION DISTRICTS AND SUNOCO SITE REPRESENTATIVE PRIOR TO REMOVING ANY EROSION CONTROL DEVICE.
4. SHOULD ANY MEASURES CONTAINED WITHIN THIS PLAN PROVE INCAPABLE OF ADEQUATELY REMOVING SEDIMENT FROM ON-SITE FLOWS PRIOR TO DISCHARGE, OR INCAPABLE OF STABILIZING THE SURFACES INVOLVED, ADDITIONAL MEASURES SHALL BE IMMEDIATELY IMPLEMENTED BY THE PERMITTEE TO ELIMINATE ALL SUCH PROBLEMS.
5. THE EROSION AND SEDIMENT POLLUTION CONTROL PLANS, APPLICATION DOCUMENTS, NARRATIVE(S), ARE ALL INCLUDED HEREWITH BY REFERENCE AS AN INTEGRAL PART OF THIS CONTRACT. ANY QUESTIONS, COMMENTS, APPROVAL CONDITIONS OR PERMIT REQUIREMENTS CONTAINED WITHIN A REGULATORY REVIEW LETTER (OR THE ENGINEER'S RESPONSE TO A REGULATORY REVIEW LETTER) FOR THIS PROJECT ARE HEREBY INCLUDED AS AN INTEGRAL PART OF THIS CONTRACT, AND THE CONTRACTOR SHALL FULLY COMPLY WITH ANY APPROVAL CONDITIONS OR PERMIT REQUIREMENTS AS IF THEY WERE INCLUDED HEREWITH IN THEIR FULL TEXT. COPIES OF ALL STATE AND LOCAL REGULATORY AGENCY REVIEWS, COMMENTS, APPROVAL CONDITIONS OR PERMIT REQUIREMENTS MAY BE OBTAINED THROUGH SUNOCO LOGISTICS.
6. REFER TO SEQUENCE OF CONSTRUCTION ON SHEET 813.

EROSION CONTROL MEASURES

TEMPORARY

1. TEMPORARY CONTROL MEASURES SHALL BE MAINTAINED UNTIL PERMANENT STABILIZATION OF UNIFORM 70% PERENNIAL VEGETATIVE COVER, OR BETTER, OF THE DISTURBED AREA HAS BEEN ACHIEVED.
2. SILT FENCE BARRIERS SHALL BE INSTALLED PRIOR TO ANY DISTURBANCE OF EXISTING GROUND COVER.
3. TEMPORARY FILTER BASINS OR FILTER BAGS, SHALL BE INSTALLED TO CONTROL SEDIMENT DISCHARGES FROM DEWATERING OR STREAM FLOW BY PASSING.
4. REMOVE AS LITTLE NATURAL VEGETATIVE COVER AS POSSIBLE TO ACHIEVE COMPLIANCE WITH THE DRAWINGS AND SPECIFICATIONS.
5. ADHERE TO THE CONSTRUCTION SEQUENCE AS CLOSELY AS POSSIBLE.
6. STOCKPILED MATERIAL SHALL BE STABILIZED FROM EROSION BY SEEDING AND MULCHING WITH TEMPORARY SEED MIX AT THE SPECIFIED RATES. IF SEASONAL CONDITIONS WILL NOT PERMIT SEEDING, THEN STOCK PILES WILL BE ENCLOSED WITH A SILT FENCE BARRIER.
7. ALL VEHICLES LEAVING WORKSITE MUST CLEAN TIRES BEFORE ENTERING ONTO A PUBLIC ROAD.

PERMANENT

1. ALL AREAS OF EARTH DISTURBED BY CONSTRUCTION WILL BE SEEDED AND MULCHED IMMEDIATELY AFTER COMPLETION OF CONSTRUCTION. IN EVENT THAT SEEDING CANNOT TAKE PLACE IMMEDIATELY DUE TO WEATHER CONDITIONS, MULCH OR HEAVY JUTE MATS WILL BE SPREAD OVER THE DISTURBED AREAS UNTIL SEEDING MAY BE PROPERLY COMPLETED.

MAINTENANCE PROGRAM FOR SEDIMENT AND EROSION CONTROLS

1. THE CONTRACTOR IS RESPONSIBLE FOR MAINTAINING ALL EROSION CONTROL FACILITIES DURING CONSTRUCTION. ALL DAMAGED FACILITIES WILL BE REPAIRED WITHIN 24 HOURS. WHEN SILT HAS ACCUMULATED TO A DEPTH OF SIX INCHES AGAINST OR AROUND ANY CONTROL FACILITY THE SILT WILL BE REMOVED IMMEDIATELY BY THE CONTRACTOR AND RETURNED TO THE SITE.
2. THE CONTRACTOR WILL NOT REMOVE ANY CONTROL FACILITY UNTIL DIRECTED BY OWNER'S REPRESENTATIVE. MATERIALS USED FOR EROSION CONTROL WILL BE DISPOSED OF OFF SITE WHEN REMOVED. SUCH MATERIALS ARE CONSIDERED PROPERTY OF THE CONTRACTOR.
3. MAINTENANCE PROGRAM PROCEDURES WILL BE PERFORMED BY THE CONTRACTOR. EROSION AND SEDIMENTATION CONTROL DEVICES SHALL BE INSPECTED ON A WEEKLY BASIS, AND AFTER EVERY RUNOFF EVENT, UNTIL STABILIZED.

CONSTRUCTION ENTRANCE

1. THE STRUCTURE'S THICKNESS WILL BE CONSTANTLY MAINTAINED TO THE SPECIFIED DIMENSIONS BY ADDING ROCK. A STOCKPILE OF ROCK MATERIALS WILL BE MAINTAINED ON THE SITE FOR THIS PURPOSE.
2. AT THE END OF EACH CONSTRUCTION DAY, ALL SEDIMENT DEPOSITED ON PUBLIC ROADWAYS WILL BE REMOVED BY USE OF A VACUUM TYPE ROAD SWEEPER AND RETURNED TO THE CONSTRUCTION SITE.

DUST CONTROL

1. THE CONTRACTOR SHALL EMPLOY CONSTRUCTION METHODS AND MEANS THAT WILL KEEP FLYING DUST TO THE MINIMUM. HE SHALL PROVIDE FOR THE SPRAYING OF WATER ON THE PROJECT AREA. THE MATERIALS AND METHODS USED FOR WATER SPRAYING SHALL BE SUBJECT TO THE APPROVAL OF THE OWNER'S REPRESENTATIVE.
2. THE CONTRACTOR SHALL PROVIDE FOR PROMPT REMOVAL FROM EXISTING PAVING ALL DIRT AND OTHER MATERIALS THAT HAVE BEEN SPILLED, WASHED UPON, TRACKED UPON, OR OTHERWISE DEPOSITED THEREON BY HIS HAULING AND OTHER OPERATIONS WHENEVER THE ACCUMULATION IS SUFFICIENT TO CAUSE THE FORMATION OF DUST OR MUD, INTERFERE WITH DRAINAGE, DAMAGE PAVEMENTS OR CREATE A TRAFFIC HAZARD.
3. THE CONTRACTOR SHALL USE A VACUUM TYPE STREET SWEEPER TO REMOVE SUCH MATERIALS.

FILTER FABRIC

1. THE FENCE INSTALLATION SHALL BE INSPECTED AFTER EVERY RUNOFF EVENT. ANY NECESSARY REPAIRS WILL BE MADE IMMEDIATELY.
2. ACCUMULATED SEDIMENT WILL BE REMOVED AS REQUIRED TO KEEP THE FENCE FUNCTIONAL. IN ALL CASES REMOVE DEPOSITS WHERE ACCUMULATIONS REACH A DEPTH OF SIX INCHES.
3. CHECK DAMS SHALL BE INSTALLED AT LOCATIONS OF NATURAL DRAINAGE AREAS OR AREAS OF EXCESSIVE RUN-OFF.
4. ALL UNDERCUTTING OR EROSION OF THE TOE ANCHOR WILL BE REPAIRED IMMEDIATELY WITH COMPACTED BACKFILL MATERIALS.
5. ADHERE TO MANUFACTURER'S RECOMMENDATION FOR REPLACING FILTER FABRIC FENCING DUE TO WEATHERING.
6. ALL SEDIMENT SHALL BE REMOVED IN AN APPROVED MANNER. SEDIMENT MAY BE PLACED WITH TOPSOIL ON TOP OF TRENCH AND SEEDED.

SOIL INFORMATION

THE SOIL INFORMATION FOR THIS PROJECT WAS OBTAINED FROM THE U.S. DEPARTMENT OF AGRICULTURE, SOIL CONSERVATION SERVICE SOIL SURVEY FOR ALL COUNTIES.

FOR THE SOILS ENCOUNTERED ON THIS PROJECT, PLEASE SEE THE SHEETS FOLLOWING THIS SHEET.

SOIL LIMITATIONS RESOLUTIONS

EROSION HAZARD (ROAD, TRAIL)

SOME OF THE TRAILS IN CERTAIN AREAS WITH SPECIFIC SOIL CONDITIONS MAY BE PRONE TO SOIL LOSS AND ACCELERATED EROSION. EROSION AND SEDIMENTATION CONTROL BMPS WILL BE IMPLEMENTED AND ANY ACCESS ROADS USED WILL BE MAINTAINED AS NECESSARY.

CORROSIVE SOIL

CORROSIVE SOILS MAY BE PRESENT WITHIN THE PROPOSED WORK AREA. A SOIL TEST TO DETERMINE THE RESISTIVITY SHOULD BE CONDUCTED PRIOR TO CONSTRUCTION. A CATHODIC PROTECTION SYSTEM WILL BE USED ON THE PIPELINE TO SLOW THE CORROSION PROCESS.

CUTBANKS CAVING

SOME CAVING IN OF STEEP EXCAVATION SIDE SLOPES IS ANTICIPATED DUE TO THE SOIL CONDITIONS WITHIN THE PROJECT AREA. TRENCH BOXES AND SLOPING-BACK OF THE TRENCH WALLS WILL BE PERFORMED AT THE DISCRETION OF THE CONTRACTOR IN ACCORDANCE WITH OSHA REGULATIONS.

DEPTH TO SATURATED ZONE

EXCAVATION SHALL BE DEWATERED AS NECESSARY USING DESILTING BAGS AS SHOWN ON THE DETAIL TO MINIMIZE EROSION AND SEDIMENTATION OUTSIDE THE PROJECT AREA. THE DOWN SLOPE SIDE OF THE DEWATERING SITES WILL BE PROTECTED WITH SILT SOCKS AND LOCATED AN AMPLE DISTANCE FROM DRAINAGE CHANNELS TO ALLOW FOR NATURAL FILTERING OF THE WATER BY THE EXISTING VEGETATION.

REV.	DATE	APP#	DESCRIPTION	APPROVAL

STV
Douglassville, PA Houston, TX Baltimore, MD Williamsport, PA

THE LOCATION OF THE PIPELINE FACILITIES AS SHOWN HEREON MUST BE CONSIDERED AS APPROXIMATE ONLY. BEFORE DIGGING OR FOR AN EXACT LOCATION PLEASE CONTACT YOUR STATES UNDERGROUND UTILITY LOCATION SERVICE.

ENGINEERING RECORD

DRAWN BY	RFT
CHECKED BY	CDA
APPROVED BY	BJB
DATE	XYZ
SCALE	AS NOTED

Sunoco Logistics Partners L.P.

12-INCH MOGADORE TO VANPORT
ALLEGHENY ACCESS PIPELINE PROJECT
EROSION AND SEDIMENTATION CONTROL NOTES

PORTAGE, MAHONING AND COLUMBIANA COUNTIES, OHIO

OLD DRAWING NO.

DWG. NO. 38-15486-OH-812

REV. NO. 0

SOILS ENCOUNTERED WITHIN PORTAGE COUNTY, OH

MAP UNIT: BGA--BOGART SILT LOAM, 0 TO 2 PERCENT SLOPES
COMPONENT: BOGART (100%)
THE BOGART COMPONENT MAKES UP 100 PERCENT OF THE MAP UNIT. SLOPES ARE 0 TO 2 PERCENT. THIS COMPONENT IS ON TERRACES. THE PARENT MATERIAL CONSISTS OF OUTWASH. DEPTH TO A ROOT RESTRICTIVE LAYER IS GREATER THAN 60 INCHES. THE NATURAL DRAINAGE CLASS IS MODERATELY WELL DRAINED. WATER MOVEMENT IN THE MOST RESTRICTIVE LAYER IS MODERATELY HIGH. AVAILABLE WATER TO A DEPTH OF 60 INCHES IS LOW. SHRINK-SWELL POTENTIAL IS LOW. THIS SOIL IS NOT FLOODED. IT IS NOT PONDED. A SEASONAL ZONE OF WATER SATURATION IS AT 27 INCHES DURING JANUARY, FEBRUARY, MARCH, APRIL, MAY, NOVEMBER, DECEMBER. ORGANIC MATTER CONTENT IN THE SURFACE HORIZON IS ABOUT 2 PERCENT. NONIRRIGATED LAND CAPABILITY CLASSIFICATION IS 2S. THIS SOIL DOES NOT MEET HYDRIC CRITERIA.

MAP UNIT: BGB--BOGART SILT LOAM, 2 TO 6 PERCENT SLOPES
COMPONENT: BOGART (100%)
THE BOGART COMPONENT MAKES UP 100 PERCENT OF THE MAP UNIT. SLOPES ARE 2 TO 6 PERCENT. THIS COMPONENT IS ON TERRACES. THE PARENT MATERIAL CONSISTS OF OUTWASH. DEPTH TO A ROOT RESTRICTIVE LAYER IS GREATER THAN 60 INCHES. THE NATURAL DRAINAGE CLASS IS MODERATELY WELL DRAINED. WATER MOVEMENT IN THE MOST RESTRICTIVE LAYER IS MODERATELY HIGH. AVAILABLE WATER TO A DEPTH OF 60 INCHES IS LOW. SHRINK-SWELL POTENTIAL IS LOW. THIS SOIL IS NOT FLOODED. IT IS NOT PONDED. A SEASONAL ZONE OF WATER SATURATION IS AT 27 INCHES DURING JANUARY, FEBRUARY, MARCH, APRIL, MAY, NOVEMBER, DECEMBER. ORGANIC MATTER CONTENT IN THE SURFACE HORIZON IS ABOUT 2 PERCENT. NONIRRIGATED LAND CAPABILITY CLASSIFICATION IS 2E. THIS SOIL DOES NOT MEET HYDRIC CRITERIA.

MAP UNIT: BHB--BOGART-HASKINS COMPLEX, 2 TO 6 PERCENT SLOPES
COMPONENT: BOGART (50%)
THE BOGART COMPONENT MAKES UP 50 PERCENT OF THE MAP UNIT. SLOPES ARE 2 TO 6 PERCENT. THIS COMPONENT IS ON TERRACES. THE PARENT MATERIAL CONSISTS OF OUTWASH. DEPTH TO A ROOT RESTRICTIVE LAYER IS GREATER THAN 60 INCHES. THE NATURAL DRAINAGE CLASS IS MODERATELY WELL DRAINED. WATER MOVEMENT IN THE MOST RESTRICTIVE LAYER IS MODERATELY HIGH. AVAILABLE WATER TO A DEPTH OF 60 INCHES IS LOW. SHRINK-SWELL POTENTIAL IS LOW. THIS SOIL IS NOT FLOODED. IT IS NOT PONDED. A SEASONAL ZONE OF WATER SATURATION IS AT 27 INCHES DURING JANUARY, FEBRUARY, MARCH, APRIL, MAY, NOVEMBER, DECEMBER. ORGANIC MATTER CONTENT IN THE SURFACE HORIZON IS ABOUT 2 PERCENT. NONIRRIGATED LAND CAPABILITY CLASSIFICATION IS 2E. THIS SOIL DOES NOT MEET HYDRIC CRITERIA.
COMPONENT: HASKINS (40%)
THE HASKINS COMPONENT MAKES UP 40 PERCENT OF THE MAP UNIT. SLOPES ARE 2 TO 6 PERCENT. THIS COMPONENT IS ON LAKE PLAINS. THE PARENT MATERIAL CONSISTS OF GLACIOLACUSTRINE DEPOSITS OVER TILL. DEPTH TO A ROOT RESTRICTIVE LAYER IS GREATER THAN 60 INCHES. THE NATURAL DRAINAGE CLASS IS SOMEWHAT POORLY DRAINED. WATER MOVEMENT IN THE MOST RESTRICTIVE LAYER IS MODERATELY LOW. AVAILABLE WATER TO A DEPTH OF 60 INCHES IS MODERATE. SHRINK-SWELL POTENTIAL IS MODERATE. THIS SOIL IS NOT FLOODED. IT IS NOT PONDED. A SEASONAL ZONE OF WATER SATURATION IS AT 12 INCHES DURING JANUARY, FEBRUARY, MARCH, APRIL. ORGANIC MATTER CONTENT IN THE SURFACE HORIZON IS ABOUT 2 PERCENT. NONIRRIGATED LAND CAPABILITY CLASSIFICATION IS 2E. THIS SOIL DOES NOT MEET HYDRIC CRITERIA. THE CALCIUM CARBONATE EQUIVALENT WITHIN 40 INCHES, TYPICALLY, DOES NOT EXCEED 15 PERCENT.

MAP UNIT: CA--CANADICE SILT LOAM
COMPONENT: CANADICE (100%)
THE CANADICE COMPONENT MAKES UP 100 PERCENT OF THE MAP UNIT. SLOPES ARE 0 TO 2 PERCENT. THIS COMPONENT IS ON DEPRESSIONS. THE PARENT MATERIAL CONSISTS OF GLACIOLACUSTRINE DEPOSITS. DEPTH TO A ROOT RESTRICTIVE LAYER IS GREATER THAN 60 INCHES. THE NATURAL DRAINAGE CLASS IS POORLY DRAINED. WATER MOVEMENT IN THE MOST RESTRICTIVE LAYER IS LOW. AVAILABLE WATER TO A DEPTH OF 60 INCHES IS MODERATE. SHRINK-SWELL POTENTIAL IS MODERATE. THIS SOIL IS NOT FLOODED. IT IS NOT PONDED. A SEASONAL ZONE OF WATER SATURATION IS AT 3 INCHES DURING JANUARY, FEBRUARY, MARCH, APRIL, MAY, JUNE, DECEMBER. ORGANIC MATTER CONTENT IN THE SURFACE HORIZON IS ABOUT 7 PERCENT. NONIRRIGATED LAND CAPABILITY CLASSIFICATION IS 4W. THIS SOIL MEETS HYDRIC CRITERIA.

MAP UNIT: CDA--CANFIELD SILT LOAM, 0 TO 2 PERCENT SLOPES
COMPONENT: CANFIELD (100%)
THE CANFIELD COMPONENT MAKES UP 100 PERCENT OF THE MAP UNIT. SLOPES ARE 0 TO 2 PERCENT. THIS COMPONENT IS ON TILL PLAINS. THE PARENT MATERIAL CONSISTS OF TILL. DEPTH TO A ROOT RESTRICTIVE LAYER IS GREATER THAN 60 INCHES. THE NATURAL DRAINAGE CLASS IS MODERATELY WELL DRAINED. WATER MOVEMENT IN THE MOST RESTRICTIVE LAYER IS MODERATELY HIGH. AVAILABLE WATER TO A DEPTH OF 60 INCHES IS LOW. SHRINK-SWELL POTENTIAL IS LOW. THIS SOIL IS NOT FLOODED. IT IS NOT PONDED. A SEASONAL ZONE OF WATER SATURATION IS AT 27 INCHES DURING JANUARY, FEBRUARY, MARCH, APRIL, MAY, NOVEMBER, DECEMBER. ORGANIC MATTER CONTENT IN THE SURFACE HORIZON IS ABOUT 2 PERCENT. NONIRRIGATED LAND CAPABILITY CLASSIFICATION IS 2W. THIS SOIL DOES NOT MEET HYDRIC CRITERIA.

MAP UNIT: CDB--CANFIELD SILT LOAM, 2 TO 6 PERCENT SLOPES
COMPONENT: CANFIELD (100%)
THE CANFIELD COMPONENT MAKES UP 100 PERCENT OF THE MAP UNIT. SLOPES ARE 2 TO 6 PERCENT. THIS COMPONENT IS ON TILL PLAINS. THE PARENT MATERIAL CONSISTS OF TILL. DEPTH TO A ROOT RESTRICTIVE LAYER IS GREATER THAN 60 INCHES. THE NATURAL DRAINAGE CLASS IS MODERATELY WELL DRAINED. WATER MOVEMENT IN THE MOST RESTRICTIVE LAYER IS MODERATELY HIGH. AVAILABLE WATER TO A DEPTH OF 60 INCHES IS LOW. SHRINK-SWELL POTENTIAL IS LOW. THIS SOIL IS NOT FLOODED. IT IS NOT PONDED. A SEASONAL ZONE OF WATER SATURATION IS AT 27 INCHES DURING JANUARY, FEBRUARY, MARCH, APRIL, MAY, NOVEMBER, DECEMBER. ORGANIC MATTER CONTENT IN THE SURFACE HORIZON IS ABOUT 2 PERCENT. NONIRRIGATED LAND CAPABILITY CLASSIFICATION IS 2E. THIS SOIL DOES NOT MEET HYDRIC CRITERIA.

MAP UNIT: CDC--CANFIELD SILT LOAM, 6 TO 12 PERCENT SLOPES
COMPONENT: CANFIELD (100%)
THE CANFIELD COMPONENT MAKES UP 100 PERCENT OF THE MAP UNIT. SLOPES ARE 6 TO 12 PERCENT. THIS COMPONENT IS ON TILL PLAINS. THE PARENT MATERIAL CONSISTS OF TILL. DEPTH TO A ROOT RESTRICTIVE LAYER IS GREATER THAN 60 INCHES. THE NATURAL DRAINAGE CLASS IS MODERATELY WELL DRAINED. WATER MOVEMENT IN THE MOST RESTRICTIVE LAYER IS MODERATELY HIGH. AVAILABLE WATER TO A DEPTH OF 60 INCHES IS LOW. SHRINK-SWELL POTENTIAL IS LOW. THIS SOIL IS NOT FLOODED. IT IS NOT PONDED. A SEASONAL ZONE OF WATER SATURATION IS AT 27 INCHES DURING JANUARY, FEBRUARY, MARCH, APRIL, MAY, NOVEMBER, DECEMBER. ORGANIC MATTER CONTENT IN THE SURFACE HORIZON IS ABOUT 2 PERCENT. NONIRRIGATED LAND CAPABILITY CLASSIFICATION IS 3E. THIS SOIL DOES NOT MEET HYDRIC CRITERIA.

MAP UNIT: CDC2--CANFIELD SILT LOAM, 6 TO 12 PERCENT SLOPES, MODERATELY ERODED
COMPONENT: CANFIELD (100%)
THE CANFIELD COMPONENT MAKES UP 100 PERCENT OF THE MAP UNIT. SLOPES ARE 6 TO 12 PERCENT. THIS COMPONENT IS ON TILL PLAINS. THE PARENT MATERIAL CONSISTS OF TILL. DEPTH TO A ROOT RESTRICTIVE LAYER IS GREATER THAN 60 INCHES. THE NATURAL DRAINAGE CLASS IS MODERATELY WELL DRAINED. WATER MOVEMENT IN THE MOST RESTRICTIVE LAYER IS MODERATELY HIGH. AVAILABLE WATER TO A DEPTH OF 60 INCHES IS LOW. SHRINK-SWELL POTENTIAL IS LOW. THIS SOIL IS NOT FLOODED. IT IS NOT PONDED. A SEASONAL ZONE OF WATER SATURATION IS AT 27 INCHES DURING JANUARY, FEBRUARY, MARCH, APRIL, MAY, NOVEMBER, DECEMBER. ORGANIC MATTER CONTENT IN THE SURFACE HORIZON IS ABOUT 2 PERCENT. NONIRRIGATED LAND CAPABILITY CLASSIFICATION IS 3E. THIS SOIL DOES NOT MEET HYDRIC CRITERIA.

MAP UNIT: CG--CARLISLE MUCK
COMPONENT: CARLISLE (100%)
THE CARLISLE COMPONENT MAKES UP 100 PERCENT OF THE MAP UNIT. SLOPES ARE 0 TO 2 PERCENT. THIS COMPONENT IS ON MARSHES. THE PARENT MATERIAL CONSISTS OF HERBACEOUS ORGANIC MATERIAL AND/OR WOODY ORGANIC MATERIAL. DEPTH TO A ROOT RESTRICTIVE LAYER IS GREATER THAN 60 INCHES. THE NATURAL DRAINAGE CLASS IS VERY POORLY DRAINED. WATER MOVEMENT IN THE MOST RESTRICTIVE LAYER IS HIGH. AVAILABLE WATER TO A DEPTH OF 60 INCHES IS VERY HIGH. SHRINK-SWELL POTENTIAL IS LOW. THIS SOIL IS NOT FLOODED. IT IS NOT PONDED. A SEASONAL ZONE OF WATER SATURATION IS AT 0 INCHES DURING JANUARY, FEBRUARY, MARCH, APRIL, MAY, JUNE, SEPTEMBER, OCTOBER, NOVEMBER, DECEMBER. ORGANIC MATTER CONTENT IN THE SURFACE HORIZON IS ABOUT 84 PERCENT. NONIRRIGATED LAND CAPABILITY CLASSIFICATION IS 3W. THIS SOIL MEETS HYDRIC CRITERIA.

MAP UNIT: CNB--CHILI LOAM, 2 TO 6 PERCENT SLOPES
COMPONENT: CHILI (100%)
THE CHILI COMPONENT MAKES UP 100 PERCENT OF THE MAP UNIT. SLOPES ARE 2 TO 6 PERCENT. THIS COMPONENT IS ON TERRACES. THE PARENT MATERIAL CONSISTS OF OUTWASH. DEPTH TO A ROOT RESTRICTIVE LAYER IS GREATER THAN 60 INCHES. THE NATURAL DRAINAGE CLASS IS WELL DRAINED. WATER MOVEMENT IN THE MOST RESTRICTIVE LAYER IS MODERATELY HIGH. AVAILABLE WATER TO A DEPTH OF 60 INCHES IS LOW. SHRINK-SWELL POTENTIAL IS LOW. THIS SOIL IS NOT FLOODED. IT IS NOT PONDED. THERE IS NO ZONE OF WATER SATURATION WITHIN A DEPTH OF 72 INCHES. ORGANIC MATTER CONTENT IN THE SURFACE HORIZON IS ABOUT 2 PERCENT. NONIRRIGATED LAND CAPABILITY CLASSIFICATION IS 2E. THIS SOIL DOES NOT MEET HYDRIC CRITERIA.

MAP UNIT: CNC--CHILI LOAM, 6 TO 12 PERCENT SLOPES
COMPONENT: CHILI (100%)
THE CHILI COMPONENT MAKES UP 100 PERCENT OF THE MAP UNIT. SLOPES ARE 6 TO 12 PERCENT. THIS COMPONENT IS ON TERRACES. THE PARENT MATERIAL CONSISTS OF OUTWASH. DEPTH TO A ROOT RESTRICTIVE LAYER IS GREATER THAN 60 INCHES. THE NATURAL DRAINAGE CLASS IS WELL DRAINED. WATER MOVEMENT IN THE MOST RESTRICTIVE LAYER IS MODERATELY HIGH. AVAILABLE WATER TO A DEPTH OF 60 INCHES IS LOW. SHRINK-SWELL POTENTIAL IS LOW. THIS SOIL IS NOT FLOODED. IT IS NOT PONDED. THERE IS NO ZONE OF WATER SATURATION WITHIN A DEPTH OF 72 INCHES. ORGANIC MATTER CONTENT IN THE SURFACE HORIZON IS ABOUT 2 PERCENT. NONIRRIGATED LAND CAPABILITY CLASSIFICATION IS 3E. THIS SOIL DOES NOT MEET HYDRIC CRITERIA.

MAP UNIT: COC2--CHILI GRAVELLY LOAM, 6 TO 12 PERCENT SLOPES, MODERATELY ERODED
COMPONENT: CHILI (100%)
THE CHILI COMPONENT MAKES UP 100 PERCENT OF THE MAP UNIT. SLOPES ARE 6 TO 12 PERCENT. THIS COMPONENT IS ON TERRACES. THE PARENT MATERIAL CONSISTS OF OUTWASH. DEPTH TO A ROOT RESTRICTIVE LAYER IS GREATER THAN 60 INCHES. THE NATURAL DRAINAGE CLASS IS WELL DRAINED. WATER MOVEMENT IN THE MOST RESTRICTIVE LAYER IS MODERATELY HIGH. AVAILABLE WATER TO A DEPTH OF 60 INCHES IS LOW. SHRINK-SWELL POTENTIAL IS LOW. THIS SOIL IS NOT FLOODED. IT IS NOT PONDED. THERE IS NO ZONE OF WATER SATURATION WITHIN A DEPTH OF 72 INCHES. ORGANIC MATTER CONTENT IN THE SURFACE HORIZON IS ABOUT 2 PERCENT. NONIRRIGATED LAND CAPABILITY CLASSIFICATION IS 3E. THIS SOIL DOES NOT MEET HYDRIC CRITERIA.

MAP UNIT: CPB--CHILI SILT LOAM, 2 TO 6 PERCENT SLOPES
COMPONENT: CHILI (100%)
THE CHILI COMPONENT MAKES UP 100 PERCENT OF THE MAP UNIT. SLOPES ARE 2 TO 6 PERCENT. THIS COMPONENT IS ON TERRACES. THE PARENT MATERIAL CONSISTS OF OUTWASH. DEPTH TO A ROOT RESTRICTIVE LAYER IS GREATER THAN 60 INCHES. THE NATURAL DRAINAGE CLASS IS WELL DRAINED. WATER MOVEMENT IN THE MOST RESTRICTIVE LAYER IS MODERATELY HIGH. AVAILABLE WATER TO A DEPTH OF 60 INCHES IS LOW. SHRINK-SWELL POTENTIAL IS LOW. THIS SOIL IS NOT FLOODED. IT IS NOT PONDED. THERE IS NO ZONE OF WATER SATURATION WITHIN A DEPTH OF 72 INCHES. ORGANIC MATTER CONTENT IN THE SURFACE HORIZON IS ABOUT 2 PERCENT. NONIRRIGATED LAND CAPABILITY CLASSIFICATION IS 2E. THIS SOIL DOES NOT MEET HYDRIC CRITERIA.

MAP UNIT: CPC--CHILI SILT LOAM, 6 TO 12 PERCENT SLOPES
COMPONENT: CHILI (100%)
THE CHILI COMPONENT MAKES UP 100 PERCENT OF THE MAP UNIT. SLOPES ARE 6 TO 12 PERCENT. THIS COMPONENT IS ON TERRACES. THE PARENT MATERIAL CONSISTS OF OUTWASH. DEPTH TO A ROOT RESTRICTIVE LAYER IS GREATER THAN 60 INCHES. THE NATURAL DRAINAGE CLASS IS WELL DRAINED. WATER MOVEMENT IN THE MOST RESTRICTIVE LAYER IS MODERATELY HIGH. AVAILABLE WATER TO A DEPTH OF 60 INCHES IS LOW. SHRINK-SWELL POTENTIAL IS LOW. THIS SOIL IS NOT FLOODED. IT IS NOT PONDED. THERE IS NO ZONE OF WATER SATURATION WITHIN A DEPTH OF 72 INCHES. ORGANIC MATTER CONTENT IN THE SURFACE HORIZON IS ABOUT 2 PERCENT. NONIRRIGATED LAND CAPABILITY CLASSIFICATION IS 3E. THIS SOIL DOES NOT MEET HYDRIC CRITERIA.

MAP UNIT: CTD--CHILI-OSHTEMO COMPLEX, 12 TO 18 PERCENT SLOPES
COMPONENT: CHILI (55%)
THE CHILI COMPONENT MAKES UP 55 PERCENT OF THE MAP UNIT. SLOPES ARE 12 TO 18 PERCENT. THIS COMPONENT IS ON TERRACES. THE PARENT MATERIAL CONSISTS OF OUTWASH. DEPTH TO A ROOT RESTRICTIVE LAYER IS GREATER THAN 60 INCHES. THE NATURAL DRAINAGE CLASS IS WELL DRAINED. WATER MOVEMENT IN THE MOST RESTRICTIVE LAYER IS MODERATELY HIGH. AVAILABLE WATER TO A DEPTH OF 60 INCHES IS LOW. SHRINK-SWELL POTENTIAL IS LOW. THIS SOIL IS NOT FLOODED. IT IS NOT PONDED. THERE IS NO ZONE OF WATER SATURATION WITHIN A DEPTH OF 72 INCHES. ORGANIC MATTER CONTENT IN THE SURFACE HORIZON IS ABOUT 2 PERCENT. NONIRRIGATED LAND CAPABILITY CLASSIFICATION IS 4E. THIS SOIL DOES NOT MEET HYDRIC CRITERIA.
COMPONENT: OSHTEMO (45%)
THE OSHTEMO COMPONENT MAKES UP 45 PERCENT OF THE MAP UNIT. SLOPES ARE 12 TO 18 PERCENT. THIS COMPONENT IS ON TERRACES. THE PARENT MATERIAL CONSISTS OF OUTWASH. DEPTH TO A ROOT RESTRICTIVE LAYER IS GREATER THAN 60 INCHES. THE NATURAL DRAINAGE CLASS IS WELL DRAINED. WATER MOVEMENT IN THE MOST RESTRICTIVE LAYER IS HIGH. AVAILABLE WATER TO A DEPTH OF 60 INCHES IS LOW. SHRINK-SWELL POTENTIAL IS LOW. THIS SOIL IS NOT FLOODED. IT IS NOT PONDED. THERE IS NO ZONE OF WATER SATURATION WITHIN A DEPTH OF 72 INCHES. ORGANIC MATTER CONTENT IN THE SURFACE HORIZON IS ABOUT 2 PERCENT. NONIRRIGATED LAND CAPABILITY CLASSIFICATION IS 4E. THIS SOIL DOES NOT MEET HYDRIC CRITERIA.

MAP UNIT: CTE--CHILI-OSHTEMO COMPLEX, 18 TO 25 PERCENT SLOPES
COMPONENT: CHILI (55%)
THE CHILI COMPONENT MAKES UP 55 PERCENT OF THE MAP UNIT. SLOPES ARE 18 TO 25 PERCENT. THIS COMPONENT IS ON TERRACES. THE PARENT MATERIAL CONSISTS OF OUTWASH. DEPTH TO A ROOT RESTRICTIVE LAYER IS GREATER THAN 60 INCHES. THE NATURAL DRAINAGE CLASS IS WELL DRAINED. WATER MOVEMENT IN THE MOST RESTRICTIVE LAYER IS MODERATELY HIGH. AVAILABLE WATER TO A DEPTH OF 60 INCHES IS LOW. SHRINK-SWELL POTENTIAL IS LOW. THIS SOIL IS NOT FLOODED. IT IS NOT PONDED. THERE IS NO ZONE OF WATER SATURATION WITHIN A DEPTH OF 72 INCHES. ORGANIC MATTER CONTENT IN THE SURFACE HORIZON IS ABOUT 2 PERCENT. NONIRRIGATED LAND CAPABILITY CLASSIFICATION IS 6E. THIS SOIL DOES NOT MEET HYDRIC CRITERIA.
COMPONENT: OSHTEMO (45%)
THE OSHTEMO COMPONENT MAKES UP 45 PERCENT OF THE MAP UNIT. SLOPES ARE 18 TO 25 PERCENT. THIS COMPONENT IS ON TERRACES. THE PARENT MATERIAL CONSISTS OF OUTWASH. DEPTH TO A ROOT RESTRICTIVE LAYER IS GREATER THAN 60 INCHES. THE NATURAL DRAINAGE CLASS IS WELL DRAINED. WATER MOVEMENT IN THE MOST RESTRICTIVE LAYER IS HIGH. AVAILABLE WATER TO A DEPTH OF 60 INCHES IS LOW. SHRINK-SWELL POTENTIAL IS LOW. THIS SOIL IS NOT FLOODED. IT IS NOT PONDED. THERE IS NO ZONE OF WATER SATURATION WITHIN A DEPTH OF 72 INCHES. ORGANIC MATTER CONTENT IN THE SURFACE HORIZON IS ABOUT 2 PERCENT. NONIRRIGATED LAND CAPABILITY CLASSIFICATION IS 6E. THIS SOIL DOES NOT MEET HYDRIC CRITERIA.

MAP UNIT: CTF--CHILI-OSHTEMO COMPLEX, 25 TO 50 PERCENT SLOPES
COMPONENT: CHILI (55%)
THE CHILI COMPONENT MAKES UP 55 PERCENT OF THE MAP UNIT. SLOPES ARE 25 TO 50 PERCENT. THIS COMPONENT IS ON TERRACES. THE PARENT MATERIAL CONSISTS OF OUTWASH. DEPTH TO A ROOT RESTRICTIVE LAYER IS GREATER THAN 60 INCHES. THE NATURAL DRAINAGE CLASS IS WELL DRAINED. WATER MOVEMENT IN THE MOST RESTRICTIVE LAYER IS MODERATELY HIGH. AVAILABLE WATER TO A DEPTH OF 60 INCHES IS LOW. SHRINK-SWELL POTENTIAL IS LOW. THIS SOIL IS NOT FLOODED. IT IS NOT PONDED. THERE IS NO ZONE OF WATER SATURATION WITHIN A DEPTH OF 72 INCHES. ORGANIC MATTER CONTENT IN THE SURFACE HORIZON IS ABOUT 2 PERCENT. NONIRRIGATED LAND CAPABILITY CLASSIFICATION IS 7E. THIS SOIL DOES NOT MEET HYDRIC CRITERIA.
COMPONENT: OSHTEMO (45%)
THE OSHTEMO COMPONENT MAKES UP 45 PERCENT OF THE MAP UNIT. SLOPES ARE 25 TO 40 PERCENT. THIS COMPONENT IS ON TERRACES. THE PARENT MATERIAL CONSISTS OF OUTWASH. DEPTH TO A ROOT RESTRICTIVE LAYER IS GREATER THAN 60 INCHES. THE NATURAL DRAINAGE CLASS IS WELL DRAINED. WATER MOVEMENT IN THE MOST RESTRICTIVE LAYER IS HIGH. AVAILABLE WATER TO A DEPTH OF 60 INCHES IS LOW. SHRINK-SWELL POTENTIAL IS LOW. THIS SOIL IS NOT FLOODED. IT IS NOT PONDED. THERE IS NO ZONE OF WATER SATURATION WITHIN A DEPTH OF 72 INCHES. ORGANIC MATTER CONTENT IN THE SURFACE HORIZON IS ABOUT 2 PERCENT. NONIRRIGATED LAND CAPABILITY CLASSIFICATION IS 7E. THIS SOIL DOES NOT MEET HYDRIC CRITERIA.

MAP UNIT: CUB--CHILI-URBAN LAND COMPLEX, UNDULATING
COMPONENT: CHILI (40%)
THE CHILI COMPONENT MAKES UP 40 PERCENT OF THE MAP UNIT. SLOPES ARE 2 TO 6 PERCENT. THIS COMPONENT IS ON TERRACES. THE PARENT MATERIAL CONSISTS OF OUTWASH. DEPTH TO A ROOT RESTRICTIVE LAYER IS GREATER THAN 60 INCHES. THE NATURAL DRAINAGE CLASS IS WELL DRAINED. WATER MOVEMENT IN THE MOST RESTRICTIVE LAYER IS MODERATELY HIGH. AVAILABLE WATER TO A DEPTH OF 60 INCHES IS LOW. SHRINK-SWELL POTENTIAL IS LOW. THIS SOIL IS NOT FLOODED. IT IS NOT PONDED. THERE IS NO ZONE OF WATER SATURATION WITHIN A DEPTH OF 72 INCHES. ORGANIC MATTER CONTENT IN THE SURFACE HORIZON IS ABOUT 2 PERCENT. NONIRRIGATED LAND CAPABILITY CLASSIFICATION IS 2E. THIS SOIL DOES NOT MEET HYDRIC CRITERIA.
COMPONENT: BORROW OR FILL AREAS (30%)
GENERATED BRIEF SOIL DESCRIPTIONS ARE CREATED FOR MAJOR COMPONENTS. THE BORROW OR FILL AREAS SOIL IS A MINOR COMPONENT.
COMPONENT: URBAN LAND (30%)
GENERATED BRIEF SOIL DESCRIPTIONS ARE CREATED FOR MAJOR SOIL COMPONENTS. THE URBAN LAND IS A MISCELLANEOUS AREA.

MAP UNIT: CUC--CHILI-URBAN LAND COMPLEX, ROLLING
COMPONENT: CHILI (40%)
THE CHILI COMPONENT MAKES UP 40 PERCENT OF THE MAP UNIT. SLOPES ARE 6 TO 12 PERCENT. THIS COMPONENT IS ON TERRACES. THE PARENT MATERIAL CONSISTS OF OUTWASH. DEPTH TO A ROOT RESTRICTIVE LAYER IS GREATER THAN 60 INCHES. THE NATURAL DRAINAGE CLASS IS WELL DRAINED. WATER MOVEMENT IN THE MOST RESTRICTIVE LAYER IS MODERATELY HIGH. AVAILABLE WATER TO A DEPTH OF 60 INCHES IS LOW. SHRINK-SWELL POTENTIAL IS LOW. THIS SOIL IS NOT FLOODED. IT IS NOT PONDED. THERE IS NO ZONE OF WATER SATURATION WITHIN A DEPTH OF 72 INCHES. ORGANIC MATTER CONTENT IN THE SURFACE HORIZON IS ABOUT 2 PERCENT. NONIRRIGATED LAND CAPABILITY CLASSIFICATION IS 3E. THIS SOIL DOES NOT MEET HYDRIC CRITERIA.
COMPONENT: BORROW OR FILL AREAS (30%)
GENERATED BRIEF SOIL DESCRIPTIONS ARE CREATED FOR MAJOR COMPONENTS. THE BORROW OR FILL AREAS SOIL IS A MINOR COMPONENT.
COMPONENT: URBAN LAND (30%)
GENERATED BRIEF SOIL DESCRIPTIONS ARE CREATED FOR MAJOR SOIL COMPONENTS. THE URBAN LAND IS A MISCELLANEOUS AREA.

MAP UNIT: CWC2--CHILI-WOOSTER COMPLEX, 6 TO 12 PERCENT SLOPES, MODERATELY ERODED
COMPONENT: CHILI (50%)
THE CHILI COMPONENT MAKES UP 50 PERCENT OF THE MAP UNIT. SLOPES ARE 6 TO 12 PERCENT. THIS COMPONENT IS ON TERRACES. THE PARENT MATERIAL CONSISTS OF OUTWASH. DEPTH TO A ROOT RESTRICTIVE LAYER IS GREATER THAN 60 INCHES. THE NATURAL DRAINAGE CLASS IS WELL DRAINED. WATER MOVEMENT IN THE MOST RESTRICTIVE LAYER IS MODERATELY HIGH. AVAILABLE WATER TO A DEPTH OF 60 INCHES IS LOW. SHRINK-SWELL POTENTIAL IS LOW. THIS SOIL IS NOT FLOODED. IT IS NOT PONDED. THERE IS NO ZONE OF WATER SATURATION WITHIN A DEPTH OF 72 INCHES. ORGANIC MATTER CONTENT IN THE SURFACE HORIZON IS ABOUT 2 PERCENT. NONIRRIGATED LAND CAPABILITY CLASSIFICATION IS 3E. THIS SOIL DOES NOT MEET HYDRIC CRITERIA.
COMPONENT: WOOSTER (30%)
THE WOOSTER COMPONENT MAKES UP 30 PERCENT OF THE MAP UNIT. SLOPES ARE 6 TO 12 PERCENT. THIS COMPONENT IS ON TILL PLAINS. THE PARENT MATERIAL CONSISTS OF TILL. DEPTH TO A ROOT RESTRICTIVE LAYER IS GREATER THAN 60 INCHES. THE NATURAL DRAINAGE CLASS IS WELL DRAINED. WATER MOVEMENT IN THE MOST RESTRICTIVE LAYER IS MODERATELY HIGH. AVAILABLE WATER TO A DEPTH OF 60 INCHES IS MODERATE. SHRINK-SWELL POTENTIAL IS LOW. THIS SOIL IS NOT FLOODED. IT IS NOT PONDED. A SEASONAL ZONE OF WATER SATURATION IS AT 36 INCHES DURING FEBRUARY, MARCH, APRIL. ORGANIC MATTER CONTENT IN THE SURFACE HORIZON IS ABOUT 2 PERCENT. NONIRRIGATED LAND CAPABILITY CLASSIFICATION IS 3E. THIS SOIL DOES NOT MEET HYDRIC CRITERIA.

MAP UNIT: CWD2--CHILI-WOOSTER COMPLEX, 12 TO 18 PERCENT SLOPES, MODERATELY ERODED
COMPONENT: CHILI (50%)
THE CHILI COMPONENT MAKES UP 50 PERCENT OF THE MAP UNIT. SLOPES ARE 12 TO 18 PERCENT. THIS COMPONENT IS ON TERRACES. THE PARENT MATERIAL CONSISTS OF OUTWASH. DEPTH TO A ROOT RESTRICTIVE LAYER IS GREATER THAN 60 INCHES. THE NATURAL DRAINAGE CLASS IS WELL DRAINED. WATER MOVEMENT IN THE MOST RESTRICTIVE LAYER IS MODERATELY HIGH. AVAILABLE WATER TO A DEPTH OF 60 INCHES IS LOW. SHRINK-SWELL POTENTIAL IS LOW. THIS SOIL IS NOT FLOODED. IT IS NOT PONDED. THERE IS NO ZONE OF WATER SATURATION WITHIN A DEPTH OF 72 INCHES. ORGANIC MATTER CONTENT IN THE SURFACE HORIZON IS ABOUT 2 PERCENT. NONIRRIGATED LAND CAPABILITY CLASSIFICATION IS 4E. THIS SOIL DOES NOT MEET HYDRIC CRITERIA.
COMPONENT: WOOSTER (30%)
THE WOOSTER COMPONENT MAKES UP 30 PERCENT OF THE MAP UNIT. SLOPES ARE 12 TO 18 PERCENT. THIS COMPONENT IS ON TILL PLAINS. THE PARENT MATERIAL CONSISTS OF TILL. DEPTH TO A ROOT RESTRICTIVE LAYER IS GREATER THAN 60 INCHES. THE NATURAL DRAINAGE CLASS IS WELL DRAINED. WATER MOVEMENT IN THE MOST RESTRICTIVE LAYER IS MODERATELY HIGH. AVAILABLE WATER TO A DEPTH OF 60 INCHES IS MODERATE. SHRINK-SWELL POTENTIAL IS LOW. THIS SOIL IS NOT FLOODED. IT IS NOT PONDED. A SEASONAL ZONE OF WATER SATURATION IS AT 36 INCHES DURING FEBRUARY, MARCH, APRIL. ORGANIC MATTER CONTENT IN THE SURFACE HORIZON IS ABOUT 2 PERCENT. NONIRRIGATED LAND CAPABILITY CLASSIFICATION IS 4E. THIS SOIL DOES NOT MEET HYDRIC CRITERIA.

MAP UNIT: CWE--CHILI-WOOSTER COMPLEX, 18 TO 30 PERCENT SLOPES
COMPONENT: CHILI (50%)
THE CHILI COMPONENT MAKES UP 50 PERCENT OF THE MAP UNIT. SLOPES ARE 18 TO 30 PERCENT. THIS COMPONENT IS ON TERRACES. THE PARENT MATERIAL CONSISTS OF OUTWASH. DEPTH TO A ROOT RESTRICTIVE LAYER IS GREATER THAN 60 INCHES. THE NATURAL DRAINAGE CLASS IS WELL DRAINED. WATER MOVEMENT IN THE MOST RESTRICTIVE LAYER IS MODERATELY HIGH. AVAILABLE WATER TO A DEPTH OF 60 INCHES IS LOW. SHRINK-SWELL POTENTIAL IS LOW. THIS SOIL IS NOT FLOODED. IT IS NOT PONDED. THERE IS NO ZONE OF WATER SATURATION WITHIN A DEPTH OF 72 INCHES. ORGANIC MATTER CONTENT IN THE SURFACE HORIZON IS ABOUT 2 PERCENT. NONIRRIGATED LAND CAPABILITY CLASSIFICATION IS 6E. THIS SOIL DOES NOT MEET HYDRIC CRITERIA.
COMPONENT: WOOSTER (30%)
THE WOOSTER COMPONENT MAKES UP 30 PERCENT OF THE MAP UNIT. SLOPES ARE 18 TO 30 PERCENT. THIS COMPONENT IS ON TILL PLAINS. THE PARENT MATERIAL CONSISTS OF TILL. DEPTH TO A ROOT RESTRICTIVE LAYER IS GREATER THAN 60 INCHES. THE NATURAL DRAINAGE CLASS IS WELL DRAINED. WATER MOVEMENT IN THE MOST RESTRICTIVE LAYER IS MODERATELY HIGH. AVAILABLE WATER TO A DEPTH OF 60 INCHES IS MODERATE. SHRINK-SWELL POTENTIAL IS LOW. THIS SOIL IS NOT FLOODED. IT IS NOT PONDED. A SEASONAL ZONE OF WATER SATURATION IS AT 36 INCHES DURING FEBRUARY, MARCH, APRIL. ORGANIC MATTER CONTENT IN THE SURFACE HORIZON IS ABOUT 2 PERCENT. NONIRRIGATED LAND CAPABILITY CLASSIFICATION IS 6E. THIS SOIL DOES NOT MEET HYDRIC CRITERIA.

MAP UNIT: DA--DAMASCUS LOAM
COMPONENT: DAMASCUS (100%)
THE DAMASCUS COMPONENT MAKES UP 100 PERCENT OF THE MAP UNIT. SLOPES ARE 0 TO 2 PERCENT. THIS COMPONENT IS ON FLATS. THE PARENT MATERIAL CONSISTS OF OUTWASH. DEPTH TO A ROOT RESTRICTIVE LAYER IS GREATER THAN 60 INCHES. THE NATURAL DRAINAGE CLASS IS POORLY DRAINED. WATER MOVEMENT IN THE MOST RESTRICTIVE LAYER IS MODERATELY HIGH. AVAILABLE WATER TO A DEPTH OF 60 INCHES IS MODERATE. SHRINK-SWELL POTENTIAL IS LOW. THIS SOIL IS NOT FLOODED. IT IS NOT PONDED. A SEASONAL ZONE OF WATER SATURATION IS AT 3 INCHES DURING JANUARY, FEBRUARY, MARCH, APRIL, MAY. ORGANIC MATTER CONTENT IN THE SURFACE HORIZON IS ABOUT 4 PERCENT. NONIRRIGATED LAND CAPABILITY CLASSIFICATION IS 3W. THIS SOIL MEETS HYDRIC CRITERIA.

MAP UNIT: DEF--DEKALB VERY STONY LOAM, 25 TO 50 PERCENT SLOPES
COMPONENT: DEKALB (90%)
THE DEKALB COMPONENT MAKES UP 90 PERCENT OF THE MAP UNIT. SLOPES ARE 25 TO 50 PERCENT. THIS COMPONENT IS ON HILLS. THE PARENT MATERIAL CONSISTS OF RESIDUUM. DEPTH TO A ROOT RESTRICTIVE LAYER, BEDROCK (LITHIC), IS 20 TO 42 INCHES. THE NATURAL DRAINAGE CLASS IS WELL DRAINED. WATER MOVEMENT IN THE MOST RESTRICTIVE LAYER IS HIGH. AVAILABLE WATER TO A DEPTH OF 60 INCHES IS VERY LOW. SHRINK-SWELL POTENTIAL IS LOW. THIS SOIL IS NOT FLOODED. IT IS NOT PONDED. THERE IS NO ZONE OF WATER SATURATION WITHIN A DEPTH OF 72 INCHES. ORGANIC MATTER CONTENT IN THE SURFACE HORIZON IS ABOUT 4 PERCENT. NONIRRIGATED LAND CAPABILITY CLASSIFICATION IS 7S. THIS SOIL DOES NOT MEET HYDRIC CRITERIA.

MAP UNIT: ELC2--ELLSWORTH SILT LOAM, 6 TO 12 PERCENT SLOPES, MODERATELY ERODED
COMPONENT: ELLSWORTH (100%)
THE ELLSWORTH COMPONENT MAKES UP 100 PERCENT OF THE MAP UNIT. SLOPES ARE 6 TO 12 PERCENT. THIS COMPONENT IS ON TILL PLAINS. THE PARENT MATERIAL CONSISTS OF TILL. DEPTH TO A ROOT RESTRICTIVE LAYER IS GREATER THAN 60 INCHES. THE NATURAL DRAINAGE CLASS IS MODERATELY WELL DRAINED. WATER MOVEMENT IN THE MOST RESTRICTIVE LAYER IS MODERATELY LOW. AVAILABLE WATER TO A DEPTH OF 60 INCHES IS MODERATE. SHRINK-SWELL POTENTIAL IS MODERATE. THIS SOIL IS NOT FLOODED. IT IS NOT PONDED. A SEASONAL ZONE OF WATER SATURATION IS AT 27 INCHES DURING JANUARY, FEBRUARY, MARCH, APRIL, MAY, NOVEMBER, DECEMBER. ORGANIC MATTER CONTENT IN THE SURFACE HORIZON IS ABOUT 2 PERCENT. NONIRRIGATED LAND CAPABILITY CLASSIFICATION IS 4E. THIS SOIL DOES NOT MEET HYDRIC CRITERIA. THE CALCIUM CARBONATE EQUIVALENT WITHIN 40 INCHES, TYPICALLY, DOES NOT EXCEED 9 PERCENT.

MAP UNIT: FCA--FITCHVILLE SILT LOAM, 0 TO 2 PERCENT SLOPES
COMPONENT: FITCHVILLE (90%)
THE FITCHVILLE COMPONENT MAKES UP 90 PERCENT OF THE MAP UNIT. SLOPES ARE 0 TO 2 PERCENT. THIS COMPONENT IS ON LAKE PLAINS. THE PARENT MATERIAL CONSISTS OF GLACIOLACUSTRINE DEPOSITS. DEPTH TO A ROOT RESTRICTIVE LAYER IS GREATER THAN 60 INCHES. THE NATURAL DRAINAGE CLASS IS SOMEWHAT POORLY DRAINED. WATER MOVEMENT IN THE MOST RESTRICTIVE LAYER IS MODERATELY HIGH. AVAILABLE WATER TO A DEPTH OF 60 INCHES IS HIGH. SHRINK-SWELL POTENTIAL IS MODERATE. THIS SOIL IS NOT FLOODED. IT IS NOT PONDED. A SEASONAL ZONE OF WATER SATURATION IS AT 12 INCHES DURING JANUARY, FEBRUARY, MARCH, APRIL, MAY, NOVEMBER, DECEMBER. ORGANIC MATTER CONTENT IN THE SURFACE HORIZON IS ABOUT 2 PERCENT. NONIRRIGATED LAND CAPABILITY CLASSIFICATION IS 2W. THIS SOIL DOES NOT MEET HYDRIC CRITERIA. THE CALCIUM CARBONATE EQUIVALENT WITHIN 40 INCHES, TYPICALLY, DOES NOT EXCEED 3 PERCENT.

MAP UNIT: FCB--FITCHVILLE SILT LOAM, 2 TO 6 PERCENT SLOPES
COMPONENT: FITCHVILLE (90%)
THE FITCHVILLE COMPONENT MAKES UP 90 PERCENT OF THE MAP UNIT. SLOPES ARE 2 TO 6 PERCENT. THIS COMPONENT IS ON LAKE PLAINS. THE PARENT MATERIAL CONSISTS OF GLACIOLACUSTRINE DEPOSITS. DEPTH TO A ROOT RESTRICTIVE LAYER IS GREATER THAN 60 INCHES. THE NATURAL DRAINAGE CLASS IS SOMEWHAT POORLY DRAINED. WATER MOVEMENT IN THE MOST RESTRICTIVE LAYER IS MODERATELY HIGH. AVAILABLE WATER TO A DEPTH OF 60 INCHES IS HIGH. SHRINK-SWELL POTENTIAL IS MODERATE. THIS SOIL IS NOT FLOODED. IT IS NOT PONDED. A SEASONAL ZONE OF WATER SATURATION IS AT 12 INCHES DURING JANUARY, FEBRUARY, MARCH, APRIL, MAY, NOVEMBER, DECEMBER. ORGANIC MATTER CONTENT IN THE SURFACE HORIZON IS ABOUT 2 PERCENT. NONIRRIGATED LAND CAPABILITY CLASSIFICATION IS 2E. THIS SOIL DOES NOT MEET HYDRIC CRITERIA. THE CALCIUM CARBONATE EQUIVALENT WITHIN 40 INCHES, TYPICALLY, DOES NOT EXCEED 3 PERCENT.

MAP UNIT: FR--FRENCHTOWN SILT LOAM
COMPONENT: FRENCHTOWN (100%)
THE FRENCHTOWN COMPONENT MAKES UP 100 PERCENT OF THE MAP UNIT. SLOPES ARE 0 TO 2 PERCENT. THIS COMPONENT IS ON FLATS. THE PARENT MATERIAL CONSISTS OF TILL. DEPTH TO A ROOT RESTRICTIVE LAYER IS GREATER THAN 60 INCHES. THE NATURAL DRAINAGE CLASS IS POORLY DRAINED. WATER MOVEMENT IN THE MOST RESTRICTIVE LAYER IS MODERATELY HIGH. AVAILABLE WATER TO A DEPTH OF 60 INCHES IS LOW. SHRINK-SWELL POTENTIAL IS LOW. THIS SOIL IS NOT FLOODED. IT IS NOT PONDED. A SEASONAL ZONE OF WATER SATURATION IS AT 3 INCHES DURING JANUARY, FEBRUARY, MARCH, APRIL, MAY, OCTOBER, NOVEMBER, DECEMBER. ORGANIC MATTER CONTENT IN THE SURFACE HORIZON IS ABOUT 3 PERCENT. NONIRRIGATED LAND CAPABILITY CLASSIFICATION IS 3W. THIS SOIL MEETS HYDRIC CRITERIA.

MAP UNIT: GBB--GEEBURG SILT LOAM, 2 TO 6 PERCENT SLOPES
COMPONENT: GEEBURG (100%)
THE GEEBURG COMPONENT MAKES UP 100 PERCENT OF THE MAP UNIT. SLOPES ARE 2 TO 6 PERCENT. THIS COMPONENT IS ON TILL PLAINS. THE PARENT MATERIAL CONSISTS OF TILL. DEPTH TO A ROOT RESTRICTIVE LAYER IS GREATER THAN 60 INCHES. THE NATURAL DRAINAGE CLASS IS MODERATELY WELL DRAINED. WATER MOVEMENT IN THE MOST RESTRICTIVE LAYER IS LOW. AVAILABLE WATER TO A DEPTH OF 60 INCHES IS MODERATE. SHRINK-SWELL POTENTIAL IS HIGH. THIS SOIL IS NOT FLOODED. IT IS NOT PONDED. A SEASONAL ZONE OF WATER SATURATION IS AT 27 INCHES DURING JANUARY, FEBRUARY, MARCH, APRIL, MAY, NOVEMBER, DECEMBER. ORGANIC MATTER CONTENT IN THE SURFACE HORIZON IS ABOUT 2 PERCENT. NONIRRIGATED LAND CAPABILITY CLASSIFICATION IS 3E. THIS SOIL DOES NOT MEET HYDRIC CRITERIA. THE CALCIUM CARBONATE EQUIVALENT WITHIN 40 INCHES, TYPICALLY, DOES NOT EXCEED 5 PERCENT.

MAP UNIT: GBB2--GEEBURG SILT LOAM, 2 TO 6 PERCENT SLOPES, MODERATELY ERODED
COMPONENT: GEEBURG (100%)
THE GEEBURG COMPONENT MAKES UP 100 PERCENT OF THE MAP UNIT. SLOPES ARE 2 TO 6 PERCENT. THIS COMPONENT IS ON TILL PLAINS. THE PARENT MATERIAL CONSISTS OF TILL. DEPTH TO A ROOT RESTRICTIVE LAYER IS GREATER THAN 60 INCHES. THE NATURAL DRAINAGE CLASS IS MODERATELY WELL DRAINED. WATER MOVEMENT IN THE MOST RESTRICTIVE LAYER IS LOW. AVAILABLE WATER TO A DEPTH OF 60 INCHES IS MODERATE. SHRINK-SWELL POTENTIAL IS HIGH. THIS SOIL IS NOT FLOODED. IT IS NOT PONDED. A SEASONAL ZONE OF WATER SATURATION IS AT 27 INCHES DURING JANUARY, FEBRUARY, MARCH, APRIL, MAY, NOVEMBER, DECEMBER. ORGANIC MATTER CONTENT IN THE SURFACE HORIZON IS ABOUT 2 PERCENT. NONIRRIGATED LAND CAPABILITY CLASSIFICATION IS 3E. THIS SOIL DOES NOT MEET HYDRIC CRITERIA. THE CALCIUM CARBONATE EQUIVALENT WITHIN 40 INCHES, TYPICALLY, DOES NOT EXCEED 5 PERCENT.

MAP UNIT: GBC2--GEEBURG SILT LOAM, 6 TO 12 PERCENT SLOPES, MODERATELY ERODED
COMPONENT: GEEBURG (100%)
THE GEEBURG COMPONENT MAKES UP 100 PERCENT OF THE MAP UNIT. SLOPES ARE 6 TO 12 PERCENT. THIS COMPONENT IS ON TILL PLAINS. THE PARENT MATERIAL CONSISTS OF TILL. DEPTH TO A ROOT RESTRICTIVE LAYER IS GREATER THAN 60 INCHES. THE NATURAL DRAINAGE CLASS IS MODERATELY WELL DRAINED. WATER MOVEMENT IN THE MOST RESTRICTIVE LAYER IS LOW. AVAILABLE WATER TO A DEPTH OF 60 INCHES IS MODERATE. SHRINK-SWELL POTENTIAL IS HIGH. THIS SOIL IS NOT FLOODED. IT IS NOT PONDED. A SEASONAL ZONE OF WATER SATURATION IS AT 27 INCHES DURING JANUARY, FEBRUARY, MARCH, APRIL, MAY, NOVEMBER, DECEMBER. ORGANIC MATTER CONTENT IN THE SURFACE HORIZON IS ABOUT 2 PERCENT. NONIRRIGATED LAND CAPABILITY CLASSIFICATION IS 4E. THIS SOIL DOES NOT MEET HYDRIC CRITERIA. THE CALCIUM CARBONATE EQUIVALENT WITHIN 40 INCHES, TYPICALLY, DOES NOT EXCEED 5 PERCENT.

MAP UNIT: GFB--GLENFORD SILT LOAM, 2 TO 6 PERCENT SLOPES
COMPONENT: GLENFORD (100%)
THE GLENFORD COMPONENT MAKES UP 100 PERCENT OF THE MAP UNIT. SLOPES ARE 2 TO 6 PERCENT. THIS COMPONENT IS ON TERRACES. THE PARENT MATERIAL CONSISTS OF GLACIOLACUSTRINE DEPOSITS. DEPTH TO A ROOT RESTRICTIVE LAYER IS GREATER THAN 60 INCHES. THE NATURAL DRAINAGE CLASS IS MODERATELY WELL DRAINED. WATER MOVEMENT IN THE MOST RESTRICTIVE LAYER IS MODERATELY HIGH. AVAILABLE WATER TO A DEPTH OF 60 INCHES IS HIGH. SHRINK-SWELL POTENTIAL IS LOW. THIS SOIL IS NOT FLOODED. IT IS NOT PONDED. A SEASONAL ZONE OF WATER SATURATION IS AT 27 INCHES DURING JANUARY, FEBRUARY, MARCH, APRIL, MAY, NOVEMBER, DECEMBER. ORGANIC MATTER CONTENT IN THE SURFACE HORIZON IS ABOUT 2 PERCENT. NONIRRIGATED LAND CAPABILITY CLASSIFICATION IS 2E. THIS SOIL DOES NOT MEET HYDRIC CRITERIA.

MAP UNIT: HO--HOLLY SILT LOAM
COMPONENT: HOLLY (95%)
THE HOLLY COMPONENT MAKES UP 95 PERCENT OF THE MAP UNIT. SLOPES ARE 0 TO 2 PERCENT. THIS COMPONENT IS ON FLOOD PLAINS. THE PARENT MATERIAL CONSISTS OF ALLUVIUM. DEPTH TO A ROOT RESTRICTIVE LAYER IS GREATER THAN 60 INCHES. THE NATURAL DRAINAGE CLASS IS POORLY DRAINED. WATER MOVEMENT IN THE MOST RESTRICTIVE LAYER IS MODERATELY HIGH. AVAILABLE WATER TO A DEPTH OF 60 INCHES IS HIGH. SHRINK-SWELL POTENTIAL IS LOW. THIS SOIL IS FREQUENTLY FLOODED. IT IS NOT PONDED. A SEASONAL ZONE OF WATER SATURATION IS AT 3 INCHES DURING JANUARY, FEBRUARY, MARCH, APRIL, MAY, DECEMBER. ORGANIC MATTER CONTENT IN THE SURFACE HORIZON IS ABOUT 4 PERCENT. NONIRRIGATED LAND CAPABILITY CLASSIFICATION IS 3W. THIS SOIL MEETS HYDRIC CRITERIA. THE CALCIUM CARBONATE EQUIVALENT WITHIN 40 INCHES, TYPICALLY, DOES NOT EXCEED 3 PERCENT.

MAP UNIT: JTA--JIMTOWN LOAM, 0 TO 2 PERCENT SLOPES
COMPONENT: JIMTOWN (90%)
THE JIMTOWN COMPONENT MAKES UP 90 PERCENT OF THE MAP UNIT. SLOPES ARE 0 TO 2 PERCENT. THIS COMPONENT IS ON TERRACES. THE PARENT MATERIAL CONSISTS OF OUTWASH. DEPTH TO A ROOT RESTRICTIVE LAYER IS GREATER THAN 60 INCHES. THE NATURAL DRAINAGE CLASS IS SOMEWHAT POORLY DRAINED. WATER MOVEMENT IN THE MOST RESTRICTIVE LAYER IS MODERATELY HIGH. AVAILABLE WATER TO A DEPTH OF 60 INCHES IS MODERATE. SHRINK-SWELL POTENTIAL IS LOW. THIS SOIL IS NOT FLOODED. IT IS NOT PONDED. A SEASONAL ZONE OF WATER SATURATION IS AT 12 INCHES DURING JANUARY, FEBRUARY, MARCH, APRIL, MAY, DECEMBER. ORGANIC MATTER CONTENT IN THE SURFACE HORIZON IS ABOUT 2 PERCENT. NONIRRIGATED LAND CAPABILITY CLASSIFICATION IS 2W. THIS SOIL DOES NOT MEET HYDRIC CRITERIA. THE CALCIUM CARBONATE EQUIVALENT WITHIN 40 INCHES, TYPICALLY, DOES NOT EXCEED 5 PERCENT.

MAP UNIT: JTB--JIMTOWN LOAM, 2 TO 6 PERCENT SLOPES
COMPONENT: JIMTOWN (100%)
THE JIMTOWN COMPONENT MAKES UP 100 PERCENT OF THE MAP UNIT. SLOPES ARE 2 TO 6 PERCENT. THIS COMPONENT IS ON TERRACES. THE PARENT MATERIAL CONSISTS OF OUTWASH. DEPTH TO A ROOT RESTRICTIVE LAYER IS GREATER THAN 60 INCHES. THE NATURAL DRAINAGE CLASS IS SOMEWHAT POORLY DRAINED. WATER MOVEMENT IN THE MOST RESTRICTIVE LAYER IS MODERATELY HIGH. AVAILABLE WATER TO A DEPTH OF 60 INCHES IS MODERATE. SHRINK SWELL POTENTIAL IS LOW. THIS SOIL IS NOT FLOODED. IT IS NOT PONDED. A SEASONAL ZONE OF WATER SATURATION IS AT 12 INCHES DURING JANUARY, FEBRUARY, MARCH, APRIL, MAY, DECEMBER. ORGANIC MATTER CONTENT IN THE SURFACE HORIZON IS ABOUT 2 PERCENT. NONIRRIGATED LAND CAPABILITY CLASSIFICATION IS 2E. THIS SOIL DOES NOT MEET HYDRIC CRITERIA. THE CALCIUM CARBONATE EQUIVALENT WITHIN 40 INCHES, TYPICALLY, DOES NOT EXCEED 5 PERCENT.

STV
Douglassville, PA Houston, TX Baltimore, MD Williamsport, PA

THE LOCATION OF THE PIPELINE FACILITIES AS SHOWN HEREON MUST BE CONSIDERED AS APPROXIMATE ONLY. BEFORE DIGGING OR FOR AN EXACT LOCATION PLEASE CONTACT YOUR STATES UNDERGROUND UTILITY LOCATION SERVICE.

ENGINEERING RECORD	
DRAWN BY	RFT
CHECKED BY	CDA
APPROVED BY	BJB
DATE	XYZ
SCALE	AS NOTED

OLD DRAWING NO.

REV.	DATE	APP#	DESCRIPTION	APPROVAL

Sunoco Logistics Partners L.P.

12-INCH MOGADORE TO VANPORT
ALLEGHENY ACCESS PIPELINE PROJECT
EROSION AND SEDIMENTATION
CONTROL NOTES

PORTAGE, MAHONING AND COLUMBIANA COUNTIES, OHIO

DWG. NO. 38-15486-OH-813

REV. NO. 0

SOILS ENCOUNTERED WITHIN PORTAGE COUNTY, OH, CONTINUED

MAP UNIT: LD--LINWOOD MUCK
COMPONENT: LINWOOD (100%)
THE LINWOOD COMPONENT MAKES UP 100 PERCENT OF THE MAP UNIT. SLOPES ARE 0 TO 2 PERCENT. THIS COMPONENT IS ON DEPRESSIONS. THE PARENT MATERIAL CONSISTS OF ORGANIC MATERIAL OVER TILL. DEPTH TO A ROOT RESTRICTIVE LAYER IS GREATER THAN 60 INCHES. THE NATURAL DRAINAGE CLASS IS VERY POORLY DRAINED. WATER MOVEMENT IN THE MOST RESTRICTIVE LAYER IS MODERATELY HIGH. AVAILABLE WATER TO A DEPTH OF 60 INCHES IS HIGH. SHRINK-SWELL POTENTIAL IS LOW. THIS SOIL IS NOT FLOODED. IT IS FREQUENTLY PONDED. A SEASONAL ZONE OF WATER SATURATION IS AT 0 INCHES DURING JANUARY, FEBRUARY, MARCH, APRIL, MAY, JUNE, NOVEMBER, DECEMBER. ORGANIC MATTER CONTENT IN THE SURFACE HORIZON IS ABOUT 55 PERCENT. NONIRRIGATED LAND CAPABILITY CLASSIFICATION IS 2W. THIS SOIL MEETS HYDRIC CRITERIA. THE CALCIUM CARBONATE EQUIVALENT WITHIN 40 INCHES, TYPICALLY, DOES NOT EXCEED 15 PERCENT.

MAP UNIT: LN--LORAIN SILTY CLAY LOAM
COMPONENT: LORAIN (100%)
THE LORAIN COMPONENT MAKES UP 100 PERCENT OF THE MAP UNIT. SLOPES ARE 0 TO 2 PERCENT. THIS COMPONENT IS ON DEPRESSIONS. THE PARENT MATERIAL CONSISTS OF GLACIOLACUSTRINE DEPOSITS. DEPTH TO A ROOT RESTRICTIVE LAYER IS GREATER THAN 60 INCHES. THE NATURAL DRAINAGE CLASS IS POORLY DRAINED. WATER MOVEMENT IN THE MOST RESTRICTIVE LAYER IS MODERATELY LOW. AVAILABLE WATER TO A DEPTH OF 60 INCHES IS MODERATE. SHRINKS WELL POTENTIAL IS MODERATE. THIS SOIL IS NOT FLOODED. IT IS NOT PONDED. A SEASONAL ZONE OF WATER SATURATION IS AT 3 INCHES DURING JANUARY, FEBRUARY, MARCH, APRIL. ORGANIC MATTER CONTENT IN THE SURFACE HORIZON IS ABOUT 6 PERCENT. NONIRRIGATED LAND CAPABILITY CLASSIFICATION IS 3W. THIS SOIL MEETS HYDRIC CRITERIA. THE CALCIUM CARBONATE EQUIVALENT WITHIN 40 INCHES, TYPICALLY, DOES NOT EXCEED 13 PERCENT.

MAP UNIT: MGA--MAHONING SILT LOAM, 0 TO 2 PERCENT SLOPES
COMPONENT: MAHONING (90%)
THE MAHONING COMPONENT MAKES UP 90 PERCENT OF THE MAP UNIT. SLOPES ARE 0 TO 2 PERCENT. THIS COMPONENT IS ON TILL PLAINS. THE PARENT MATERIAL CONSISTS OF TILL. DEPTH TO A ROOT RESTRICTIVE LAYER IS GREATER THAN 60 INCHES. THE NATURAL DRAINAGE CLASS IS SOMEWHAT POORLY DRAINED. WATER MOVEMENT IN THE MOST RESTRICTIVE LAYER IS MODERATELY LOW. AVAILABLE WATER TO A DEPTH OF 60 INCHES IS MODERATE. SHRINK-SWELL POTENTIAL IS MODERATE. THIS SOIL IS NOT FLOODED. IT IS NOT PONDED. A SEASONAL ZONE OF WATER SATURATION IS AT 12 INCHES DURING JANUARY, FEBRUARY, MARCH, APRIL, MAY, JUNE, NOVEMBER, DECEMBER. ORGANIC MATTER CONTENT IN THE SURFACE HORIZON IS ABOUT 3 PERCENT. NONIRRIGATED LAND CAPABILITY CLASSIFICATION IS 3W. THIS SOIL DOES NOT MEET HYDRIC CRITERIA. THE CALCIUM CARBONATE EQUIVALENT WITHIN 40 INCHES, TYPICALLY, DOES NOT EXCEED 9 PERCENT.

MAP UNIT: MGB--MAHONING SILT LOAM, 2 TO 6 PERCENT SLOPES
COMPONENT: MAHONING (100%)
THE MAHONING COMPONENT MAKES UP 100 PERCENT OF THE MAP UNIT. SLOPES ARE 2 TO 6 PERCENT. THIS COMPONENT IS ON TILL PLAINS. THE PARENT MATERIAL CONSISTS OF TILL. DEPTH TO A ROOT RESTRICTIVE LAYER IS GREATER THAN 60 INCHES. THE NATURAL DRAINAGE CLASS IS SOMEWHAT POORLY DRAINED. WATER MOVEMENT IN THE MOST RESTRICTIVE LAYER IS MODERATELY LOW. AVAILABLE WATER TO A DEPTH OF 60 INCHES IS MODERATE. SHRINK-SWELL POTENTIAL IS MODERATE. THIS SOIL IS NOT FLOODED. IT IS NOT PONDED. A SEASONAL ZONE OF WATER SATURATION IS AT 12 INCHES DURING JANUARY, FEBRUARY, MARCH, APRIL, MAY, JUNE, NOVEMBER, DECEMBER. ORGANIC MATTER CONTENT IN THE SURFACE HORIZON IS ABOUT 3 PERCENT. NONIRRIGATED LAND CAPABILITY CLASSIFICATION IS 3E. THIS SOIL DOES NOT MEET HYDRIC CRITERIA. THE CALCIUM CARBONATE EQUIVALENT WITHIN 40 INCHES, TYPICALLY, DOES NOT EXCEED 9 PERCENT.

MAP UNIT: MTB--MITIWANGA SILT LOAM, 2 TO 6 PERCENT SLOPES
COMPONENT: MITIWANGA (100%)
THE MITIWANGA COMPONENT MAKES UP 100 PERCENT OF THE MAP UNIT. SLOPES ARE 2 TO 6 PERCENT. THIS COMPONENT IS ON TILL PLAINS. THE PARENT MATERIAL CONSISTS OF TILL OVER RESIDUUM WEATHERED FROM SANDSTONE. DEPTH TO A ROOT RESTRICTIVE LAYER, BEDROCK (LITHIC), IS 20 TO 40 INCHES. THE NATURAL DRAINAGE CLASS IS SOMEWHAT POORLY DRAINED. WATER MOVEMENT IN THE MOST RESTRICTIVE LAYER IS MODERATELY HIGH. AVAILABLE WATER TO A DEPTH OF 60 INCHES IS LOW. SHRINK-SWELL POTENTIAL IS MODERATE. THIS SOIL IS NOT FLOODED. IT IS NOT PONDED. A SEASONAL ZONE OF WATER SATURATION IS AT 12 INCHES DURING JANUARY, FEBRUARY, MARCH, APRIL, MAY, JUNE, NOVEMBER, DECEMBER. ORGANIC MATTER CONTENT IN THE SURFACE HORIZON IS ABOUT 3 PERCENT. NONIRRIGATED LAND CAPABILITY CLASSIFICATION IS 2E. THIS SOIL DOES NOT MEET HYDRIC CRITERIA.

MAP UNIT: MVB--MITIWANGA SILT LOAM, MODERATELY WELL DRAINED VARIANT, 2 TO 6 PERCENT SLOPES
COMPONENT: MITIWANGA VARIANT (100%)
THE MITIWANGA VARIANT COMPONENT MAKES UP 100 PERCENT OF THE MAP UNIT. SLOPES ARE 2 TO 6 PERCENT. THIS COMPONENT IS ON TILL PLAINS. THE PARENT MATERIAL CONSISTS OF TILL OVER RESIDUUM WEATHERED FROM SANDSTONE. DEPTH TO A ROOT RESTRICTIVE LAYER, BEDROCK (LITHIC), IS 20 TO 40 INCHES. THE NATURAL DRAINAGE CLASS IS MODERATELY WELL DRAINED. WATER MOVEMENT IN THE MOST RESTRICTIVE LAYER IS MODERATELY LOW. AVAILABLE WATER TO A DEPTH OF 60 INCHES IS MODERATE. SHRINK-SWELL POTENTIAL IS MODERATE. THIS SOIL IS NOT FLOODED. IT IS NOT PONDED. A SEASONAL ZONE OF WATER SATURATION IS AT 27 INCHES DURING JANUARY, FEBRUARY, MARCH, APRIL, MAY, NOVEMBER, DECEMBER. ORGANIC MATTER CONTENT IN THE SURFACE HORIZON IS ABOUT 3 PERCENT. NONIRRIGATED LAND CAPABILITY CLASSIFICATION IS 2E. THIS SOIL DOES NOT MEET HYDRIC CRITERIA.

MAP UNIT: OD--OLMSTED LOAM
COMPONENT: OLMSTED (100%)
THE OLMSTED COMPONENT MAKES UP 100 PERCENT OF THE MAP UNIT. SLOPES ARE 0 TO 2 PERCENT. THIS COMPONENT IS ON FLATS. THE PARENT MATERIAL CONSISTS OF OUTWASH. DEPTH TO A ROOT RESTRICTIVE LAYER IS GREATER THAN 60 INCHES. THE NATURAL DRAINAGE CLASS IS VERY POORLY DRAINED. WATER MOVEMENT IN THE MOST RESTRICTIVE LAYER IS HIGH. AVAILABLE WATER TO A DEPTH OF 60 INCHES IS MODERATE. SHRINK-SWELL POTENTIAL IS LOW. THIS SOIL IS NOT FLOODED. IT IS FREQUENTLY PONDED. A SEASONAL ZONE OF WATER SATURATION IS AT 3 INCHES DURING JANUARY, FEBRUARY, MARCH, APRIL, MAY, NOVEMBER, DECEMBER. ORGANIC MATTER CONTENT IN THE SURFACE HORIZON IS ABOUT 6 PERCENT. NONIRRIGATED LAND CAPABILITY CLASSIFICATION IS 2W. THIS SOIL MEETS HYDRIC CRITERIA. THE CALCIUM CARBONATE EQUIVALENT WITHIN 40 INCHES, TYPICALLY, DOES NOT EXCEED 5 PERCENT.

MAP UNIT: OSB--OSHTEMO SANDY LOAM, 2 TO 6 PERCENT SLOPES
COMPONENT: OSHTEMO (100%)
THE OSHTEMO COMPONENT MAKES UP 100 PERCENT OF THE MAP UNIT. SLOPES ARE 2 TO 6 PERCENT. THIS COMPONENT IS ON TERRACES. THE PARENT MATERIAL CONSISTS OF OUTWASH. DEPTH TO A ROOT RESTRICTIVE LAYER IS GREATER THAN 60 INCHES. THE NATURAL DRAINAGE CLASS IS WELL DRAINED. WATER MOVEMENT IN THE MOST RESTRICTIVE LAYER IS HIGH. AVAILABLE WATER TO A DEPTH OF 60 INCHES IS LOW. SHRINK-SWELL POTENTIAL IS LOW. THIS SOIL IS NOT FLOODED. IT IS NOT PONDED. THERE IS NO ZONE OF WATER SATURATION WITHIN A DEPTH OF 72 INCHES. ORGANIC MATTER CONTENT IN THE SURFACE HORIZON IS ABOUT 2 PERCENT. NONIRRIGATED LAND CAPABILITY CLASSIFICATION IS 3S. IRRIGATED LAND CAPABILITY CLASSIFICATION IS 3E. THIS SOIL DOES NOT MEET HYDRIC CRITERIA.

MAP UNIT: OSC--OSHTEMO SANDY LOAM, 6 TO 12 PERCENT SLOPES
COMPONENT: OSHTEMO (100%)
THE OSHTEMO COMPONENT MAKES UP 100 PERCENT OF THE MAP UNIT. SLOPES ARE 6 TO 12 PERCENT. THIS COMPONENT IS ON TERRACES. THE PARENT MATERIAL CONSISTS OF OUTWASH. DEPTH TO A ROOT RESTRICTIVE LAYER IS GREATER THAN 60 INCHES. THE NATURAL DRAINAGE CLASS IS WELL DRAINED. WATER MOVEMENT IN THE MOST RESTRICTIVE LAYER IS HIGH. AVAILABLE WATER TO A DEPTH OF 60 INCHES IS LOW. SHRINK-SWELL POTENTIAL IS LOW. THIS SOIL IS NOT FLOODED. IT IS NOT PONDED. THERE IS NO ZONE OF WATER SATURATION WITHIN A DEPTH OF 72 INCHES. ORGANIC MATTER CONTENT IN THE SURFACE HORIZON IS ABOUT 2 PERCENT. NONIRRIGATED LAND CAPABILITY CLASSIFICATION IS 3E. IRRIGATED LAND CAPABILITY CLASSIFICATION IS 3E. THIS SOIL DOES NOT MEET HYDRIC CRITERIA.

MAP UNIT: PG--PITS, GRAVEL
COMPONENT: GRAVEL PITS (100%)
GENERATED BRIEF SOIL DESCRIPTIONS ARE CREATED FOR MAJOR SOIL COMPONENTS. THE GRAVEL PITS ARE A MISCELLANEOUS AREA.

MAP UNIT: REA--RAVENNA SILT LOAM, 0 TO 2 PERCENT SLOPES
COMPONENT: RAVENNA (90%)
THE RAVENNA COMPONENT MAKES UP 90 PERCENT OF THE MAP UNIT. SLOPES ARE 0 TO 2 PERCENT. THIS COMPONENT IS ON TILL PLAINS. THE PARENT MATERIAL CONSISTS OF TILL. DEPTH TO A ROOT RESTRICTIVE LAYER IS GREATER THAN 60 INCHES. THE NATURAL DRAINAGE CLASS IS SOMEWHAT POORLY DRAINED. WATER MOVEMENT IN THE MOST RESTRICTIVE LAYER IS MODERATELY HIGH. AVAILABLE WATER TO A DEPTH OF 60 INCHES IS LOW. SHRINK-SWELL POTENTIAL IS LOW. THIS SOIL IS NOT FLOODED. IT IS NOT PONDED. A SEASONAL ZONE OF WATER SATURATION IS AT 12 INCHES DURING JANUARY, FEBRUARY, MARCH, APRIL, MAY, JUNE, NOVEMBER, DECEMBER. ORGANIC MATTER CONTENT IN THE SURFACE HORIZON IS ABOUT 2 PERCENT. NONIRRIGATED LAND CAPABILITY CLASSIFICATION IS 2W. THIS SOIL DOES NOT MEET HYDRIC CRITERIA.

MAP UNIT: REB--RAVENNA SILT LOAM, 2 TO 6 PERCENT SLOPES
COMPONENT: RAVENNA (100%)
THE RAVENNA COMPONENT MAKES UP 100 PERCENT OF THE MAP UNIT. SLOPES ARE 2 TO 6 PERCENT. THIS COMPONENT IS ON TILL PLAINS. THE PARENT MATERIAL CONSISTS OF TILL. DEPTH TO A ROOT RESTRICTIVE LAYER IS GREATER THAN 60 INCHES. THE NATURAL DRAINAGE CLASS IS SOMEWHAT POORLY DRAINED. WATER MOVEMENT IN THE MOST RESTRICTIVE LAYER IS MODERATELY HIGH. AVAILABLE WATER TO A DEPTH OF 60 INCHES IS LOW. SHRINK-SWELL POTENTIAL IS LOW. THIS SOIL IS NOT FLOODED. IT IS NOT PONDED. A SEASONAL ZONE OF WATER SATURATION IS AT 12 INCHES DURING JANUARY, FEBRUARY, MARCH, APRIL, MAY, JUNE, NOVEMBER, DECEMBER. ORGANIC MATTER CONTENT IN THE SURFACE HORIZON IS ABOUT 2 PERCENT. NONIRRIGATED LAND CAPABILITY CLASSIFICATION IS 2E. THIS SOIL DOES NOT MEET HYDRIC CRITERIA.

MAP UNIT: RMA--REMSEN SILT LOAM, 0 TO 2 PERCENT SLOPES
COMPONENT: REMSEN (90%)
THE REMSEN COMPONENT MAKES UP 90 PERCENT OF THE MAP UNIT. SLOPES ARE 0 TO 2 PERCENT. THIS COMPONENT IS ON TILL PLAINS. THE PARENT MATERIAL CONSISTS OF TILL. DEPTH TO A ROOT RESTRICTIVE LAYER IS GREATER THAN 60 INCHES. THE NATURAL DRAINAGE CLASS IS SOMEWHAT POORLY DRAINED. WATER MOVEMENT IN THE MOST RESTRICTIVE LAYER IS LOW. AVAILABLE WATER TO A DEPTH OF 60 INCHES IS MODERATE. SHRINK-SWELL POTENTIAL IS MODERATE. THIS SOIL IS NOT FLOODED. IT IS NOT PONDED. A SEASONAL ZONE OF WATER SATURATION IS AT 12 INCHES DURING JANUARY, FEBRUARY, MARCH, APRIL, MAY, DECEMBER. ORGANIC MATTER CONTENT IN THE SURFACE HORIZON IS ABOUT 4 PERCENT. NONIRRIGATED LAND CAPABILITY CLASSIFICATION IS 3W. THIS SOIL DOES NOT MEET HYDRIC CRITERIA.

MAP UNIT: RMB--REMSEN SILT LOAM, 2 TO 6 PERCENT SLOPES
COMPONENT: REMSEN (100%)
THE REMSEN COMPONENT MAKES UP 100 PERCENT OF THE MAP UNIT. SLOPES ARE 2 TO 6 PERCENT. THIS COMPONENT IS ON TILL PLAINS. THE PARENT MATERIAL CONSISTS OF TILL. DEPTH TO A ROOT RESTRICTIVE LAYER IS GREATER THAN 60 INCHES. THE NATURAL DRAINAGE CLASS IS SOMEWHAT POORLY DRAINED. WATER MOVEMENT IN THE MOST RESTRICTIVE LAYER IS LOW. AVAILABLE WATER TO A DEPTH OF 60 INCHES IS MODERATE. SHRINK-SWELL POTENTIAL IS MODERATE. THIS SOIL IS NOT FLOODED. IT IS NOT PONDED. A SEASONAL ZONE OF WATER SATURATION IS AT 12 INCHES DURING JANUARY, FEBRUARY, MARCH, APRIL, MAY, DECEMBER. ORGANIC MATTER CONTENT IN THE SURFACE HORIZON IS ABOUT 4 PERCENT. NONIRRIGATED LAND CAPABILITY CLASSIFICATION IS 3W. THIS SOIL DOES NOT MEET HYDRIC CRITERIA.

MAP UNIT: RSB--RITTMAN SILT LOAM, 2 TO 6 PERCENT SLOPES
COMPONENT: RITTMAN (100%)
THE RITTMAN COMPONENT MAKES UP 100 PERCENT OF THE MAP UNIT. SLOPES ARE 2 TO 6 PERCENT. THIS COMPONENT IS ON TILL PLAINS. THE PARENT MATERIAL CONSISTS OF TILL. DEPTH TO A ROOT RESTRICTIVE LAYER IS GREATER THAN 60 INCHES. THE NATURAL DRAINAGE CLASS IS MODERATELY WELL DRAINED. WATER MOVEMENT IN THE MOST RESTRICTIVE LAYER IS MODERATELY HIGH. AVAILABLE WATER TO A DEPTH OF 60 INCHES IS LOW. SHRINK-SWELL POTENTIAL IS MODERATE. THIS SOIL IS NOT FLOODED. IT IS NOT PONDED. A SEASONAL ZONE OF WATER SATURATION IS AT 27 INCHES DURING JANUARY, FEBRUARY, MARCH, APRIL, MAY, NOVEMBER, DECEMBER. ORGANIC MATTER CONTENT IN THE SURFACE HORIZON IS ABOUT 2 PERCENT. NONIRRIGATED LAND CAPABILITY CLASSIFICATION IS 2E. THIS SOIL DOES NOT MEET HYDRIC CRITERIA.

MAP UNIT: SB--SEBRING SILT LOAM
COMPONENT: SEBRING (100%)
THE SEBRING COMPONENT MAKES UP 100 PERCENT OF THE MAP UNIT. SLOPES ARE 0 TO 2 PERCENT. THIS COMPONENT IS ON TERRACES. THE PARENT MATERIAL CONSISTS OF GLACIOLACUSTRINE DEPOSITS. DEPTH TO A ROOT RESTRICTIVE LAYER IS GREATER THAN 60 INCHES. THE NATURAL DRAINAGE CLASS IS POORLY DRAINED. WATER MOVEMENT IN THE MOST RESTRICTIVE LAYER IS MODERATELY HIGH. AVAILABLE WATER TO A DEPTH OF 60 INCHES IS HIGH. SHRINK-SWELL POTENTIAL IS MODERATE. THIS SOIL IS NOT FLOODED. IT IS NOT PONDED. A SEASONAL ZONE OF WATER SATURATION IS AT 3 INCHES DURING JANUARY, FEBRUARY, MARCH, APRIL, MAY, JUNE, NOVEMBER, DECEMBER. ORGANIC MATTER CONTENT IN THE SURFACE HORIZON IS ABOUT 4 PERCENT. NONIRRIGATED LAND CAPABILITY CLASSIFICATION IS 3W. THIS SOIL MEETS HYDRIC CRITERIA.

MAP UNIT: SV--SEBRING SILT LOAM, DARK SURFACE VARIANT
COMPONENT: SEBRING VARIANT (100%)
THE SEBRING VARIANT COMPONENT MAKES UP 100 PERCENT OF THE MAP UNIT. SLOPES ARE 0 TO 2 PERCENT. THIS COMPONENT IS ON GLACIAL LAKES (RELICT). THE PARENT MATERIAL CONSISTS OF GLACIOLACUSTRINE DEPOSITS. DEPTH TO A ROOT RESTRICTIVE LAYER IS GREATER THAN 60 INCHES. THE NATURAL DRAINAGE CLASS IS POORLY DRAINED. WATER MOVEMENT IN THE MOST RESTRICTIVE LAYER IS MODERATELY HIGH. AVAILABLE WATER TO A DEPTH OF 60 INCHES IS HIGH. SHRINK-SWELL POTENTIAL IS MODERATE. THIS SOIL IS NOT FLOODED. IT IS NOT PONDED. A SEASONAL ZONE OF WATER SATURATION IS AT 3 INCHES DURING JANUARY, FEBRUARY, MARCH, APRIL, MAY, JUNE, NOVEMBER, DECEMBER. ORGANIC MATTER CONTENT IN THE SURFACE HORIZON IS ABOUT 6 PERCENT. NONIRRIGATED LAND CAPABILITY CLASSIFICATION IS 2W. THIS SOIL MEETS HYDRIC CRITERIA.

MAP UNIT: TRA--TRUMBULL SILT LOAM, 0 TO 2 PERCENT SLOPES
COMPONENT: TRUMBULL (100%)
THE TRUMBULL COMPONENT MAKES UP 100 PERCENT OF THE MAP UNIT. SLOPES ARE 0 TO 2 PERCENT. THIS COMPONENT IS ON DEPRESSIONS. THE PARENT MATERIAL CONSISTS OF TILL. DEPTH TO A ROOT RESTRICTIVE LAYER IS GREATER THAN 60 INCHES. THE NATURAL DRAINAGE CLASS IS POORLY DRAINED. WATER MOVEMENT IN THE MOST RESTRICTIVE LAYER IS LOW. AVAILABLE WATER TO A DEPTH OF 60 INCHES IS MODERATE. SHRINK-SWELL POTENTIAL IS MODERATE. THIS SOIL IS NOT FLOODED. IT IS NOT PONDED. A SEASONAL ZONE OF WATER SATURATION IS AT 0 INCHES DURING JANUARY, FEBRUARY, MARCH, APRIL, MAY, JUNE, NOVEMBER, DECEMBER. ORGANIC MATTER CONTENT IN THE SURFACE HORIZON IS ABOUT 4 PERCENT. NONIRRIGATED LAND CAPABILITY CLASSIFICATION IS 4W. THIS SOIL MEETS HYDRIC CRITERIA.

MAP UNIT: TUB--TYPIC UDORTHENTS, STRIP MINED, UNDULATING
COMPONENT: TYPIC UDORTHENTS (100%)
THE TYPIC UDORTHENTS COMPONENT MAKES UP 100 PERCENT OF THE MAP UNIT. SLOPES ARE 2 TO 6 PERCENT. DEPTH TO A ROOT RESTRICTIVE LAYER IS GREATER THAN 60 INCHES. THE NATURAL DRAINAGE CLASS IS WELL DRAINED. AVAILABLE WATER TO A DEPTH OF 60 INCHES IS VERY LOW. SHRINK-SWELL POTENTIAL IS LOW. THIS SOIL IS NOT FLOODED. IT IS NOT PONDED. THERE IS NO ZONE OF WATER SATURATION WITHIN A DEPTH OF 72 INCHES. THIS SOIL DOES NOT MEET HYDRIC CRITERIA.

MAP UNIT: TUD--TYPIC UDORTHENTS, STRIP MINED, HILLY
COMPONENT: TYPIC UDORTHENTS (100%)
THE TYPIC UDORTHENTS COMPONENT MAKES UP 100 PERCENT OF THE MAP UNIT. SLOPES ARE 6 TO 25 PERCENT. DEPTH TO A ROOT RESTRICTIVE LAYER IS GREATER THAN 60 INCHES. THE NATURAL DRAINAGE CLASS IS WELL DRAINED. AVAILABLE WATER TO A DEPTH OF 60 INCHES IS VERY LOW. SHRINK-SWELL POTENTIAL IS LOW. THIS SOIL IS NOT FLOODED. IT IS NOT PONDED. THERE IS NO ZONE OF WATER SATURATION WITHIN A DEPTH OF 72 INCHES. THIS SOIL DOES NOT MEET HYDRIC CRITERIA.

MAP UNIT: UA--UDORTHENTS
COMPONENT: UDORTHENTS (100%)
THE UDORTHENTS COMPONENT MAKES UP 100 PERCENT OF THE MAP UNIT. SLOPES ARE DEPTH TO A ROOT RESTRICTIVE LAYER IS GREATER THAN 60 INCHES. AVAILABLE WATER TO A DEPTH OF 60 INCHES IS VERY LOW. SHRINK-SWELL POTENTIAL IS LOW. THIS SOIL IS NOT FLOODED. IT IS NOT PONDED. THERE IS NO ZONE OF WATER SATURATION WITHIN A DEPTH OF 72 INCHES. THIS SOIL DOES NOT MEET HYDRIC CRITERIA.

MAP UNIT: WAA--WADSWORTH SILT LOAM, 0 TO 2 PERCENT SLOPES
COMPONENT: WADSWORTH (90%)
THE WADSWORTH COMPONENT MAKES UP 90 PERCENT OF THE MAP UNIT. SLOPES ARE 0 TO 2 PERCENT. THIS COMPONENT IS ON TILL PLAINS. THE PARENT MATERIAL CONSISTS OF TILL. DEPTH TO A ROOT RESTRICTIVE LAYER, FRAGIPAN, IS 24 TO 28 INCHES. THE NATURAL DRAINAGE CLASS IS SOMEWHAT POORLY DRAINED. WATER MOVEMENT IN THE MOST RESTRICTIVE LAYER IS MODERATELY HIGH. AVAILABLE WATER TO A DEPTH OF 60 INCHES IS LOW. SHRINK-SWELL POTENTIAL IS MODERATE. THIS SOIL IS NOT FLOODED. IT IS NOT PONDED. A SEASONAL ZONE OF WATER SATURATION IS AT 12 INCHES DURING JANUARY, FEBRUARY, MARCH, APRIL, MAY, JUNE, NOVEMBER, DECEMBER. ORGANIC MATTER CONTENT IN THE SURFACE HORIZON IS ABOUT 3 PERCENT. NONIRRIGATED LAND CAPABILITY CLASSIFICATION IS 3W. THIS SOIL DOES NOT MEET HYDRIC CRITERIA.

MAP UNIT: WAB--WADSWORTH SILT LOAM, 2 TO 6 PERCENT SLOPES
COMPONENT: WADSWORTH (95%)
THE WADSWORTH COMPONENT MAKES UP 95 PERCENT OF THE MAP UNIT. SLOPES ARE 2 TO 6 PERCENT. THIS COMPONENT IS ON TILL PLAINS. THE PARENT MATERIAL CONSISTS OF TILL. DEPTH TO A ROOT RESTRICTIVE LAYER, FRAGIPAN, IS 24 TO 28 INCHES. THE NATURAL DRAINAGE CLASS IS SOMEWHAT POORLY DRAINED. WATER MOVEMENT IN THE MOST RESTRICTIVE LAYER IS MODERATELY HIGH. AVAILABLE WATER TO A DEPTH OF 60 INCHES IS LOW. SHRINK-SWELL POTENTIAL IS MODERATE. THIS SOIL IS NOT FLOODED. IT IS NOT PONDED. A SEASONAL ZONE OF WATER SATURATION IS AT 12 INCHES DURING JANUARY, FEBRUARY, MARCH, APRIL, MAY, JUNE, NOVEMBER, DECEMBER. ORGANIC MATTER CONTENT IN THE SURFACE HORIZON IS ABOUT 3 PERCENT. NONIRRIGATED LAND CAPABILITY CLASSIFICATION IS 3E. THIS SOIL DOES NOT MEET HYDRIC CRITERIA.

MAP UNIT: WC--WALLKILL SILT LOAM
COMPONENT: WALLKILL (100%)
THE WALLKILL COMPONENT MAKES UP 100 PERCENT OF THE MAP UNIT. SLOPES ARE 0 TO 2 PERCENT. THIS COMPONENT IS ON DEPRESSIONS. THE PARENT MATERIAL CONSISTS OF ALLUVIUM OVER HERBACEOUS ORGANIC MATERIAL. DEPTH TO A ROOT RESTRICTIVE LAYER IS GREATER THAN 60 INCHES. THE NATURAL DRAINAGE CLASS IS POORLY DRAINED. WATER MOVEMENT IN THE MOST RESTRICTIVE LAYER IS MODERATELY HIGH. AVAILABLE WATER TO A DEPTH OF 60 INCHES IS VERY HIGH. SHRINK-SWELL POTENTIAL IS LOW. THIS SOIL IS FREQUENTLY FLOODED. IT IS FREQUENTLY PONDED. A SEASONAL ZONE OF WATER SATURATION IS AT 0 INCHES DURING JANUARY, FEBRUARY, MARCH, APRIL, MAY, JUNE, SEPTEMBER, OCTOBER, NOVEMBER, DECEMBER. ORGANIC MATTER CONTENT IN THE SURFACE HORIZON IS ABOUT 8 PERCENT. NONIRRIGATED LAND CAPABILITY CLASSIFICATION IS 3W. THIS SOIL MEETS HYDRIC CRITERIA.

MAP UNIT: WHA--WHEELING SILT LOAM, 0 TO 2 PERCENT SLOPES
COMPONENT: WHEELING (100%)
THE WHEELING COMPONENT MAKES UP 100 PERCENT OF THE MAP UNIT. SLOPES ARE 0 TO 2 PERCENT. THIS COMPONENT IS ON TERRACES. THE PARENT MATERIAL CONSISTS OF OUTWASH. DEPTH TO A ROOT RESTRICTIVE LAYER IS GREATER THAN 60 INCHES. THE NATURAL DRAINAGE CLASS IS WELL DRAINED. WATER MOVEMENT IN THE MOST RESTRICTIVE LAYER IS MODERATELY HIGH. AVAILABLE WATER TO A DEPTH OF 60 INCHES IS MODERATE. SHRINK-SWELL POTENTIAL IS LOW. THIS SOIL IS NOT FLOODED. IT IS NOT PONDED. THERE IS NO ZONE OF WATER SATURATION WITHIN A DEPTH OF 72 INCHES. ORGANIC MATTER CONTENT IN THE SURFACE HORIZON IS ABOUT 2 PERCENT. NONIRRIGATED LAND CAPABILITY CLASSIFICATION IS 1. THIS SOIL DOES NOT MEET HYDRIC CRITERIA.

MAP UNIT: WHB--WHEELING SILT LOAM, 2 TO 6 PERCENT SLOPES
COMPONENT: WHEELING (100%)
THE WHEELING COMPONENT MAKES UP 100 PERCENT OF THE MAP UNIT. SLOPES ARE 2 TO 6 PERCENT. THIS COMPONENT IS ON TERRACES. THE PARENT MATERIAL CONSISTS OF OUTWASH. DEPTH TO A ROOT RESTRICTIVE LAYER IS GREATER THAN 60 INCHES. THE NATURAL DRAINAGE CLASS IS WELL DRAINED. WATER MOVEMENT IN THE MOST RESTRICTIVE LAYER IS MODERATELY HIGH. AVAILABLE WATER TO A DEPTH OF 60 INCHES IS MODERATE. SHRINK-SWELL POTENTIAL IS LOW. THIS SOIL IS NOT FLOODED. IT IS NOT PONDED. THERE IS NO ZONE OF WATER SATURATION WITHIN A DEPTH OF 72 INCHES. ORGANIC MATTER CONTENT IN THE SURFACE HORIZON IS ABOUT 2 PERCENT. NONIRRIGATED LAND CAPABILITY CLASSIFICATION IS 2E. THIS SOIL DOES NOT MEET HYDRIC CRITERIA.

MAP UNIT: WUB--WOOSTER SILT LOAM, 2 TO 6 PERCENT SLOPES
COMPONENT: WOOSTER (100%)
THE WOOSTER COMPONENT MAKES UP 100 PERCENT OF THE MAP UNIT. SLOPES ARE 2 TO 6 PERCENT. THIS COMPONENT IS ON TILL PLAINS. THE PARENT MATERIAL CONSISTS OF TILL. DEPTH TO A ROOT RESTRICTIVE LAYER, FRAGIPAN, IS 20 TO 30 INCHES. THE NATURAL DRAINAGE CLASS IS WELL DRAINED. WATER MOVEMENT IN THE MOST RESTRICTIVE LAYER IS MODERATELY HIGH. AVAILABLE WATER TO A DEPTH OF 60 INCHES IS LOW. SHRINK-SWELL POTENTIAL IS LOW. THIS SOIL IS NOT FLOODED. IT IS NOT PONDED. A SEASONAL ZONE OF WATER SATURATION IS AT 36 INCHES DURING FEBRUARY, MARCH, APRIL. ORGANIC MATTER CONTENT IN THE SURFACE HORIZON IS ABOUT 2 PERCENT. NONIRRIGATED LAND CAPABILITY CLASSIFICATION IS 2E. THIS SOIL DOES NOT MEET HYDRIC CRITERIA.

MAP UNIT: WUC--WOOSTER SILT LOAM, 6 TO 12 PERCENT SLOPES
COMPONENT: WOOSTER (100%)
THE WOOSTER COMPONENT MAKES UP 100 PERCENT OF THE MAP UNIT. SLOPES ARE 6 TO 12 PERCENT. THIS COMPONENT IS ON TILL PLAINS. THE PARENT MATERIAL CONSISTS OF TILL. DEPTH TO A ROOT RESTRICTIVE LAYER, FRAGIPAN, IS 20 TO 30 INCHES. THE NATURAL DRAINAGE CLASS IS WELL DRAINED. WATER MOVEMENT IN THE MOST RESTRICTIVE LAYER IS MODERATELY HIGH. AVAILABLE WATER TO A DEPTH OF 60 INCHES IS LOW. SHRINK-SWELL POTENTIAL IS LOW. THIS SOIL IS NOT FLOODED. IT IS NOT PONDED. A SEASONAL ZONE OF WATER SATURATION IS AT 36 INCHES DURING FEBRUARY, MARCH, APRIL. ORGANIC MATTER CONTENT IN THE SURFACE HORIZON IS ABOUT 2 PERCENT. NONIRRIGATED LAND CAPABILITY CLASSIFICATION IS 3E. THIS SOIL DOES NOT MEET HYDRIC CRITERIA.

MAP UNIT: WUC2--WOOSTER SILT LOAM, 6 TO 12 PERCENT SLOPES, MODERATELY ERODED
COMPONENT: WOOSTER (100%)
THE WOOSTER COMPONENT MAKES UP 100 PERCENT OF THE MAP UNIT. SLOPES ARE 6 TO 12 PERCENT. THIS COMPONENT IS ON TILL PLAINS. THE PARENT MATERIAL CONSISTS OF TILL. DEPTH TO A ROOT RESTRICTIVE LAYER, FRAGIPAN, IS 20 TO 30 INCHES. THE NATURAL DRAINAGE CLASS IS WELL DRAINED. WATER MOVEMENT IN THE MOST RESTRICTIVE LAYER IS MODERATELY HIGH. AVAILABLE WATER TO A DEPTH OF 60 INCHES IS LOW. SHRINK-SWELL POTENTIAL IS LOW. THIS SOIL IS NOT FLOODED. IT IS NOT PONDED. A SEASONAL ZONE OF WATER SATURATION IS AT 36 INCHES DURING FEBRUARY, MARCH, APRIL. ORGANIC MATTER CONTENT IN THE SURFACE HORIZON IS ABOUT 2 PERCENT. NONIRRIGATED LAND CAPABILITY CLASSIFICATION IS 3E. THIS SOIL DOES NOT MEET HYDRIC CRITERIA.

MAP UNIT: WUD2--WOOSTER SILT LOAM, 12 TO 18 PERCENT SLOPES, MODERATELY ERODED
COMPONENT: WOOSTER (100%)
THE WOOSTER COMPONENT MAKES UP 100 PERCENT OF THE MAP UNIT. SLOPES ARE 12 TO 18 PERCENT. THIS COMPONENT IS ON TILL PLAINS. THE PARENT MATERIAL CONSISTS OF TILL. DEPTH TO A ROOT RESTRICTIVE LAYER, FRAGIPAN, IS 20 TO 30 INCHES. THE NATURAL DRAINAGE CLASS IS WELL DRAINED. WATER MOVEMENT IN THE MOST RESTRICTIVE LAYER IS MODERATELY HIGH. AVAILABLE WATER TO A DEPTH OF 60 INCHES IS LOW. SHRINK-SWELL POTENTIAL IS LOW. THIS SOIL IS NOT FLOODED. IT IS NOT PONDED. A SEASONAL ZONE OF WATER SATURATION IS AT 36 INCHES DURING FEBRUARY, MARCH, APRIL. ORGANIC MATTER CONTENT IN THE SURFACE HORIZON IS ABOUT 2 PERCENT. NONIRRIGATED LAND CAPABILITY CLASSIFICATION IS 4E. THIS SOIL DOES NOT MEET HYDRIC CRITERIA.

STV
Douglassville, PA Houston, TX Baltimore, MD Williamsport, PA

THE LOCATION OF THE PIPELINE FACILITIES AS SHOWN HEREON MUST BE CONSIDERED AS APPROXIMATE ONLY. BEFORE DIGGING OR FOR AN EXACT LOCATION PLEASE CONTACT YOUR STATES UNDERGROUND UTILITY LOCATION SERVICE.

ENGINEERING RECORD	
DRAWN BY	RFT
CHECKED BY	CDA
APPROVED BY	BJB
DATE	XYZ
SCALE	AS NOTED

OLD DRAWING NO.

REV.	DATE	APP#	DESCRIPTION	APPROVAL

Sunoco Logistics Partners L.P.

12-INCH MOGADORE TO VANPORT
ALLEGHENY ACCESS PIPELINE PROJECT
EROSION AND SEDIMENTATION
CONTROL NOTES

PORTAGE, MAHONING AND COLUMBIANA COUNTIES, OHIO

DWG. NO. 38-15486-OH-814

REV. NO. 0

SOILS ENCOUNTERED WITHIN MAHONING COUNTY, OH

MAP UNIT: BGB--BOGART SILT LOAM, 2 TO 6 PERCENT SLOPES
COMPONENT: BOGART (100%)
THE BOGART COMPONENT MAKES UP 100 PERCENT OF THE MAP UNIT. SLOPES ARE 2 TO 6 PERCENT. THIS COMPONENT IS ON TERRACES. THE PARENT MATERIAL CONSISTS OF OUTWASH. DEPTH TO A ROOT RESTRICTIVE LAYER IS GREATER THAN 60 INCHES. THE NATURAL DRAINAGE CLASS IS MODERATELY WELL DRAINED. WATER MOVEMENT IN THE MOST RESTRICTIVE LAYER IS MODERATELY HIGH. AVAILABLE WATER TO A DEPTH OF 60 INCHES IS LOW. SHRINK-SWELL POTENTIAL IS LOW. THIS SOIL IS NOT FLOODED. IT IS NOT PONDED. A SEASONAL ZONE OF WATER SATURATION IS AT 27 INCHES DURING JANUARY, FEBRUARY, MARCH, APRIL, MAY, NOVEMBER, DECEMBER. ORGANIC MATTER CONTENT IN THE SURFACE HORIZON IS ABOUT 2 PERCENT. NONIRRIGATED LAND CAPABILITY CLASSIFICATION IS 2E. THIS SOIL DOES NOT MEET HYDRIC CRITERIA.

MAP UNIT: BGC--BOGART LOAM, 6 TO 12 PERCENT SLOPES
COMPONENT: BOGART (95%)
THE BOGART COMPONENT MAKES UP 95 PERCENT OF THE MAP UNIT. SLOPES ARE 6 TO 12 PERCENT. THIS COMPONENT IS ON TERRACES. THE PARENT MATERIAL CONSISTS OF OUTWASH. DEPTH TO A ROOT RESTRICTIVE LAYER IS GREATER THAN 60 INCHES. THE NATURAL DRAINAGE CLASS IS MODERATELY WELL DRAINED. WATER MOVEMENT IN THE MOST RESTRICTIVE LAYER IS HIGH. AVAILABLE WATER TO A DEPTH OF 60 INCHES IS LOW. SHRINK-SWELL POTENTIAL IS LOW. THIS SOIL IS NOT FLOODED. IT IS NOT PONDED. A SEASONAL ZONE OF WATER SATURATION IS AT 27 INCHES DURING JANUARY, FEBRUARY, MARCH, APRIL, MAY, NOVEMBER, DECEMBER. ORGANIC MATTER CONTENT IN THE SURFACE HORIZON IS ABOUT 2 PERCENT. NONIRRIGATED LAND CAPABILITY CLASSIFICATION IS 3E. THIS SOIL DOES NOT MEET HYDRIC CRITERIA. THE CALCIUM CARBONATE EQUIVALENT WITHIN 40 INCHES, TYPICALLY, DOES NOT EXCEED 5 PERCENT.

MAP UNIT: BTB--BOGART LOAM, TILL SUBSTRATUM, 2 TO 6 PERCENT SLOPES
COMPONENT: BOGART (85%)
THE BOGART COMPONENT MAKES UP 85 PERCENT OF THE MAP UNIT. SLOPES ARE 2 TO 6 PERCENT. THIS COMPONENT IS ON TERRACES. THE PARENT MATERIAL CONSISTS OF OUTWASH. DEPTH TO A ROOT RESTRICTIVE LAYER IS GREATER THAN 60 INCHES. THE NATURAL DRAINAGE CLASS IS MODERATELY WELL DRAINED. WATER MOVEMENT IN THE MOST RESTRICTIVE LAYER IS MODERATELY HIGH. AVAILABLE WATER TO A DEPTH OF 60 INCHES IS MODERATE. SHRINK-SWELL POTENTIAL IS LOW. THIS SOIL IS NOT FLOODED. IT IS NOT PONDED. A SEASONAL ZONE OF WATER SATURATION IS AT 27 INCHES DURING JANUARY, FEBRUARY, MARCH, APRIL, MAY, NOVEMBER, DECEMBER. ORGANIC MATTER CONTENT IN THE SURFACE HORIZON IS ABOUT 2 PERCENT. NONIRRIGATED LAND CAPABILITY CLASSIFICATION IS 2E. THIS SOIL DOES NOT MEET HYDRIC CRITERIA. THE CALCIUM CARBONATE EQUIVALENT WITHIN 40 INCHES, TYPICALLY, DOES NOT EXCEED 5 PERCENT.

MAP UNIT: CA--CANADICE SILT LOAM
COMPONENT: CANADICE (100%)
THE CANADICE COMPONENT MAKES UP 100 PERCENT OF THE MAP UNIT. SLOPES ARE 0 TO 2 PERCENT. THIS COMPONENT IS ON DEPRESSIONS. THE PARENT MATERIAL CONSISTS OF GLACIOLACUSTRINE DEPOSITS. DEPTH TO A ROOT RESTRICTIVE LAYER IS GREATER THAN 60 INCHES. THE NATURAL DRAINAGE CLASS IS POORLY DRAINED. WATER MOVEMENT IN THE MOST RESTRICTIVE LAYER IS LOW. AVAILABLE WATER TO A DEPTH OF 60 INCHES IS MODERATE. SHRINK-SWELL POTENTIAL IS MODERATE. THIS SOIL IS NOT FLOODED. IT IS NOT PONDED. A SEASONAL ZONE OF WATER SATURATION IS AT 3 INCHES DURING JANUARY, FEBRUARY, MARCH, APRIL, MAY, JUNE, DECEMBER. ORGANIC MATTER CONTENT IN THE SURFACE HORIZON IS ABOUT 7 PERCENT. NONIRRIGATED LAND CAPABILITY CLASSIFICATION IS 4W. THIS SOIL MEETS HYDRIC CRITERIA.

MAP UNIT: CDB--CANFIELD SILT LOAM, 2 TO 6 PERCENT SLOPES
COMPONENT: CANFIELD (100%)
THE CANFIELD COMPONENT MAKES UP 100 PERCENT OF THE MAP UNIT. SLOPES ARE 2 TO 6 PERCENT. THIS COMPONENT IS ON TILL PLAINS. THE PARENT MATERIAL CONSISTS OF TILL. DEPTH TO A ROOT RESTRICTIVE LAYER IS GREATER THAN 60 INCHES. THE NATURAL DRAINAGE CLASS IS MODERATELY WELL DRAINED. WATER MOVEMENT IN THE MOST RESTRICTIVE LAYER IS MODERATELY HIGH. AVAILABLE WATER TO A DEPTH OF 60 INCHES IS LOW. SHRINK-SWELL POTENTIAL IS LOW. THIS SOIL IS NOT FLOODED. IT IS NOT PONDED. A SEASONAL ZONE OF WATER SATURATION IS AT 27 INCHES DURING JANUARY, FEBRUARY, MARCH, APRIL, MAY, NOVEMBER, DECEMBER. ORGANIC MATTER CONTENT IN THE SURFACE HORIZON IS ABOUT 2 PERCENT. NONIRRIGATED LAND CAPABILITY CLASSIFICATION IS 2E. THIS SOIL DOES NOT MEET HYDRIC CRITERIA.

MAP UNIT: CDC--CANFIELD SILT LOAM, 6 TO 12 PERCENT SLOPES
COMPONENT: CANFIELD (100%)
THE CANFIELD COMPONENT MAKES UP 100 PERCENT OF THE MAP UNIT. SLOPES ARE 6 TO 12 PERCENT. THIS COMPONENT IS ON TILL PLAINS. THE PARENT MATERIAL CONSISTS OF TILL. DEPTH TO A ROOT RESTRICTIVE LAYER IS GREATER THAN 60 INCHES. THE NATURAL DRAINAGE CLASS IS MODERATELY WELL DRAINED. WATER MOVEMENT IN THE MOST RESTRICTIVE LAYER IS MODERATELY HIGH. AVAILABLE WATER TO A DEPTH OF 60 INCHES IS LOW. SHRINK-SWELL POTENTIAL IS LOW. THIS SOIL IS NOT FLOODED. IT IS NOT PONDED. A SEASONAL ZONE OF WATER SATURATION IS AT 27 INCHES DURING JANUARY, FEBRUARY, MARCH, APRIL, MAY, NOVEMBER, DECEMBER. ORGANIC MATTER CONTENT IN THE SURFACE HORIZON IS ABOUT 2 PERCENT. NONIRRIGATED LAND CAPABILITY CLASSIFICATION IS 3E. THIS SOIL DOES NOT MEET HYDRIC CRITERIA.

MAP UNIT: CDC2--CANFIELD SILT LOAM, 6 TO 12 PERCENT SLOPES, MODERATELY ERODED
COMPONENT: CANFIELD (100%)
THE CANFIELD COMPONENT MAKES UP 100 PERCENT OF THE MAP UNIT. SLOPES ARE 6 TO 12 PERCENT. THIS COMPONENT IS ON TILL PLAINS. THE PARENT MATERIAL CONSISTS OF TILL. DEPTH TO A ROOT RESTRICTIVE LAYER IS GREATER THAN 60 INCHES. THE NATURAL DRAINAGE CLASS IS MODERATELY WELL DRAINED. WATER MOVEMENT IN THE MOST RESTRICTIVE LAYER IS MODERATELY HIGH. AVAILABLE WATER TO A DEPTH OF 60 INCHES IS LOW. SHRINK-SWELL POTENTIAL IS LOW. THIS SOIL IS NOT FLOODED. IT IS NOT PONDED. A SEASONAL ZONE OF WATER SATURATION IS AT 27 INCHES DURING JANUARY, FEBRUARY, MARCH, APRIL, MAY, NOVEMBER, DECEMBER. ORGANIC MATTER CONTENT IN THE SURFACE HORIZON IS ABOUT 2 PERCENT. NONIRRIGATED LAND CAPABILITY CLASSIFICATION IS 3E. THIS SOIL DOES NOT MEET HYDRIC CRITERIA.

MAP UNIT: CDE--CANFIELD SILT LOAM, 20 TO 35 PERCENT SLOPES
COMPONENT: CANFIELD (80%)
THE CANFIELD COMPONENT MAKES UP 80 PERCENT OF THE MAP UNIT. SLOPES ARE 20 TO 35 PERCENT. THIS COMPONENT IS ON TILL PLAINS. THE PARENT MATERIAL CONSISTS OF LOAMY TILL. DEPTH TO A ROOT RESTRICTIVE LAYER, FRAGIPAN, IS 18 TO 30 INCHES. THE NATURAL DRAINAGE CLASS IS MODERATELY WELL DRAINED. WATER MOVEMENT IN THE MOST RESTRICTIVE LAYER IS MODERATELY LOW. AVAILABLE WATER TO A DEPTH OF 60 INCHES IS MODERATE. SHRINK-SWELL POTENTIAL IS LOW. THIS SOIL IS NOT FLOODED. IT IS NOT PONDED. A SEASONAL ZONE OF WATER SATURATION IS AT 20 INCHES DURING JANUARY, FEBRUARY, MARCH, APRIL, MAY, NOVEMBER, DECEMBER. ORGANIC MATTER CONTENT IN THE SURFACE HORIZON IS ABOUT 2 PERCENT. NONIRRIGATED LAND CAPABILITY CLASSIFICATION IS 6E. THIS SOIL DOES NOT MEET HYDRIC CRITERIA.

MAP UNIT: CMB--CHILI LOAM, 2 TO 6 PERCENT SLOPES
COMPONENT: CHILI (95%)
THE CHILI COMPONENT MAKES UP 95 PERCENT OF THE MAP UNIT. SLOPES ARE 2 TO 6 PERCENT. THIS COMPONENT IS ON TERRACES. THE PARENT MATERIAL CONSISTS OF OUTWASH. DEPTH TO A ROOT RESTRICTIVE LAYER IS GREATER THAN 60 INCHES. THE NATURAL DRAINAGE CLASS IS WELL DRAINED. WATER MOVEMENT IN THE MOST RESTRICTIVE LAYER IS HIGH. AVAILABLE WATER TO A DEPTH OF 60 INCHES IS LOW. SHRINK-SWELL POTENTIAL IS LOW. THIS SOIL IS NOT FLOODED. IT IS NOT PONDED. THERE IS NO ZONE OF WATER SATURATION WITHIN A DEPTH OF 72 INCHES. ORGANIC MATTER CONTENT IN THE SURFACE HORIZON IS ABOUT 2 PERCENT. NONIRRIGATED LAND CAPABILITY CLASSIFICATION IS 2E. THIS SOIL DOES NOT MEET HYDRIC CRITERIA. THE CALCIUM CARBONATE EQUIVALENT WITHIN 40 INCHES, TYPICALLY, DOES NOT EXCEED 3 PERCENT.

MAP UNIT: CMC--CHILI LOAM, 6 TO 12 PERCENT SLOPES
COMPONENT: CHILI (95%)
THE CHILI COMPONENT MAKES UP 95 PERCENT OF THE MAP UNIT. SLOPES ARE 6 TO 12 PERCENT. THIS COMPONENT IS ON TERRACES. THE PARENT MATERIAL CONSISTS OF OUTWASH. DEPTH TO A ROOT RESTRICTIVE LAYER IS GREATER THAN 60 INCHES. THE NATURAL DRAINAGE CLASS IS WELL DRAINED. WATER MOVEMENT IN THE MOST RESTRICTIVE LAYER IS HIGH. AVAILABLE WATER TO A DEPTH OF 60 INCHES IS LOW. SHRINK-SWELL POTENTIAL IS LOW. THIS SOIL IS NOT FLOODED. IT IS NOT PONDED. THERE IS NO ZONE OF WATER SATURATION WITHIN A DEPTH OF 72 INCHES. ORGANIC MATTER CONTENT IN THE SURFACE HORIZON IS ABOUT 2 PERCENT. NONIRRIGATED LAND CAPABILITY CLASSIFICATION IS 3E. THIS SOIL DOES NOT MEET HYDRIC CRITERIA. THE CALCIUM CARBONATE EQUIVALENT WITHIN 40 INCHES, TYPICALLY, DOES NOT EXCEED 3 PERCENT.

MAP UNIT: CH--CARLISLE MUCK
COMPONENT: CARLISLE (100%)
THE CARLISLE COMPONENT MAKES UP 100 PERCENT OF THE MAP UNIT. SLOPES ARE 0 TO 2 PERCENT. THIS COMPONENT IS ON SWAMPS. THE PARENT MATERIAL CONSISTS OF HERBACEOUS ORGANIC MATERIAL AND/OR WOODY ORGANIC MATERIAL. DEPTH TO A ROOT RESTRICTIVE LAYER IS GREATER THAN 60 INCHES. THE NATURAL DRAINAGE CLASS IS VERY POORLY DRAINED. WATER MOVEMENT IN THE MOST RESTRICTIVE LAYER IS HIGH. AVAILABLE WATER TO A DEPTH OF 60 INCHES IS VERY HIGH. SHRINK-SWELL POTENTIAL IS LOW. THIS SOIL IS NOT FLOODED. IT IS FREQUENTLY PONDED. A SEASONAL ZONE OF WATER SATURATION IS AT 3 INCHES DURING JANUARY, FEBRUARY, MARCH, APRIL, MAY, JUNE, SEPTEMBER, OCTOBER, NOVEMBER, DECEMBER. ORGANIC MATTER CONTENT IN THE SURFACE HORIZON IS ABOUT 84 PERCENT. NONIRRIGATED LAND CAPABILITY CLASSIFICATION IS 3W. THIS SOIL MEETS HYDRIC CRITERIA.

MAP UNIT: CK--CHAGRIN LOAM
COMPONENT: CHAGRIN (90%)
THE CHAGRIN COMPONENT MAKES UP 90 PERCENT OF THE MAP UNIT. SLOPES ARE 0 TO 2 PERCENT. THIS COMPONENT IS ON FLOOD PLAINS. THE PARENT MATERIAL CONSISTS OF ALLUVIUM. DEPTH TO A ROOT RESTRICTIVE LAYER IS GREATER THAN 60 INCHES. THE NATURAL DRAINAGE CLASS IS WELL DRAINED. WATER MOVEMENT IN THE MOST RESTRICTIVE LAYER IS MODERATELY HIGH. AVAILABLE WATER TO A DEPTH OF 60 INCHES IS LOW. SHRINK-SWELL POTENTIAL IS LOW. THIS SOIL IS OCCASIONALLY FLOODED. IT IS NOT PONDED. A SEASONAL ZONE OF WATER SATURATION IS AT 60 INCHES DURING FEBRUARY, MARCH. ORGANIC MATTER CONTENT IN THE SURFACE HORIZON IS ABOUT 3 PERCENT. NONIRRIGATED LAND CAPABILITY CLASSIFICATION IS 2W. THIS SOIL DOES NOT MEET HYDRIC CRITERIA.

MAP UNIT: CLD--CHILI GRAVELLY LOAM, 12 TO 18 PERCENT SLOPES
COMPONENT: CHILI (100%)
THE CHILI COMPONENT MAKES UP 100 PERCENT OF THE MAP UNIT. SLOPES ARE 12 TO 18 PERCENT. THIS COMPONENT IS ON TERRACES. THE PARENT MATERIAL CONSISTS OF OUTWASH. DEPTH TO A ROOT RESTRICTIVE LAYER IS GREATER THAN 60 INCHES. THE NATURAL DRAINAGE CLASS IS WELL DRAINED. WATER MOVEMENT IN THE MOST RESTRICTIVE LAYER IS HIGH. AVAILABLE WATER TO A DEPTH OF 60 INCHES IS LOW. SHRINK-SWELL POTENTIAL IS LOW. THIS SOIL IS NOT FLOODED. IT IS NOT PONDED. THERE IS NO ZONE OF WATER SATURATION WITHIN A DEPTH OF 72 INCHES. ORGANIC MATTER CONTENT IN THE SURFACE HORIZON IS ABOUT 2 PERCENT. NONIRRIGATED LAND CAPABILITY CLASSIFICATION IS 4E. THIS SOIL DOES NOT MEET HYDRIC CRITERIA. THE CALCIUM CARBONATE EQUIVALENT WITHIN 40 INCHES, TYPICALLY, DOES NOT EXCEED 3 PERCENT.

MAP UNIT: DA--DAMASCUS LOAM
COMPONENT: DAMASCUS (100%)
THE DAMASCUS COMPONENT MAKES UP 100 PERCENT OF THE MAP UNIT. SLOPES ARE 0 TO 2 PERCENT. THIS COMPONENT IS ON FLATS. THE PARENT MATERIAL CONSISTS OF OUTWASH. DEPTH TO A ROOT RESTRICTIVE LAYER IS GREATER THAN 60 INCHES. THE NATURAL DRAINAGE CLASS IS POORLY DRAINED. WATER MOVEMENT IN THE MOST RESTRICTIVE LAYER IS MODERATELY HIGH. AVAILABLE WATER TO A DEPTH OF 60 INCHES IS MODERATE. SHRINK-SWELL POTENTIAL IS LOW. THIS SOIL IS NOT FLOODED. IT IS NOT PONDED. A SEASONAL ZONE OF WATER SATURATION IS AT 3 INCHES DURING JANUARY, FEBRUARY, MARCH, APRIL, MAY. ORGANIC MATTER CONTENT IN THE SURFACE HORIZON IS ABOUT 4 PERCENT. NONIRRIGATED LAND CAPABILITY CLASSIFICATION IS 3W. THIS SOIL MEETS HYDRIC CRITERIA.

MAP UNIT: DKE--DEKALB VERY STONY LOAM, 12 TO 25 PERCENT SLOPES
COMPONENT: DEKALB (90%)
THE DEKALB COMPONENT MAKES UP 90 PERCENT OF THE MAP UNIT. SLOPES ARE 12 TO 25 PERCENT. THIS COMPONENT IS ON HILLS. THE PARENT MATERIAL CONSISTS OF RESIDUUM. DEPTH TO A ROOT RESTRICTIVE LAYER, BEDROCK (LITHIC), IS 20 TO 42 INCHES. THE NATURAL DRAINAGE CLASS IS WELL DRAINED. WATER MOVEMENT IN THE MOST RESTRICTIVE LAYER IS HIGH. AVAILABLE WATER TO A DEPTH OF 60 INCHES IS VERY LOW. SHRINK-SWELL POTENTIAL IS LOW. THIS SOIL IS NOT FLOODED. IT IS NOT PONDED. THERE IS NO ZONE OF WATER SATURATION WITHIN A DEPTH OF 72 INCHES. ORGANIC MATTER CONTENT IN THE SURFACE HORIZON IS ABOUT 4 PERCENT. NONIRRIGATED LAND CAPABILITY CLASSIFICATION IS 6S. THIS SOIL DOES NOT MEET HYDRIC CRITERIA.

MAP UNIT: DKF--DEKALB VERY STONY LOAM, 25 TO 50 PERCENT SLOPES
COMPONENT: DEKALB (90%)
THE DEKALB COMPONENT MAKES UP 90 PERCENT OF THE MAP UNIT. SLOPES ARE 25 TO 50 PERCENT. THIS COMPONENT IS ON HILLS. THE PARENT MATERIAL CONSISTS OF RESIDUUM. DEPTH TO A ROOT RESTRICTIVE LAYER, BEDROCK (LITHIC), IS 20 TO 42 INCHES. THE NATURAL DRAINAGE CLASS IS WELL DRAINED. WATER MOVEMENT IN THE MOST RESTRICTIVE LAYER IS HIGH. AVAILABLE WATER TO A DEPTH OF 60 INCHES IS VERY LOW. SHRINK-SWELL POTENTIAL IS LOW. THIS SOIL IS NOT FLOODED. IT IS NOT PONDED. THERE IS NO ZONE OF WATER SATURATION WITHIN A DEPTH OF 72 INCHES. ORGANIC MATTER CONTENT IN THE SURFACE HORIZON IS ABOUT 4 PERCENT. NONIRRIGATED LAND CAPABILITY CLASSIFICATION IS 7S. THIS SOIL DOES NOT MEET HYDRIC CRITERIA.

MAP UNIT: ELB--ELLSWORTH SILT LOAM, 2 TO 6 PERCENT SLOPES
COMPONENT: ELLSWORTH (95%)
THE ELLSWORTH COMPONENT MAKES UP 95 PERCENT OF THE MAP UNIT. SLOPES ARE 2 TO 6 PERCENT. THIS COMPONENT IS ON TILL PLAINS. THE PARENT MATERIAL CONSISTS OF TILL. DEPTH TO A ROOT RESTRICTIVE LAYER IS GREATER THAN 60 INCHES. THE NATURAL DRAINAGE CLASS IS MODERATELY WELL DRAINED. WATER MOVEMENT IN THE MOST RESTRICTIVE LAYER IS MODERATELY LOW. AVAILABLE WATER TO A DEPTH OF 60 INCHES IS HIGH. SHRINK-SWELL POTENTIAL IS MODERATE. THIS SOIL IS NOT FLOODED. IT IS NOT PONDED. A SEASONAL ZONE OF WATER SATURATION IS AT 27 INCHES DURING JANUARY, FEBRUARY, MARCH, APRIL, MAY, NOVEMBER, DECEMBER. ORGANIC MATTER CONTENT IN THE SURFACE HORIZON IS ABOUT 2 PERCENT. NONIRRIGATED LAND CAPABILITY CLASSIFICATION IS 3E. THIS SOIL DOES NOT MEET HYDRIC CRITERIA. THE CALCIUM CARBONATE EQUIVALENT WITHIN 40 INCHES, TYPICALLY, DOES NOT EXCEED 9 PERCENT.

MAP UNIT: ELC--ELLSWORTH SILT LOAM, 6 TO 12 PERCENT SLOPES
COMPONENT: ELLSWORTH (100%)
THE ELLSWORTH COMPONENT MAKES UP 100 PERCENT OF THE MAP UNIT. SLOPES ARE 6 TO 12 PERCENT. THIS COMPONENT IS ON TILL PLAINS. THE PARENT MATERIAL CONSISTS OF TILL. DEPTH TO A ROOT RESTRICTIVE LAYER IS GREATER THAN 60 INCHES. THE NATURAL DRAINAGE CLASS IS MODERATELY WELL DRAINED. WATER MOVEMENT IN THE MOST RESTRICTIVE LAYER IS MODERATELY LOW. AVAILABLE WATER TO A DEPTH OF 60 INCHES IS HIGH. SHRINK-SWELL POTENTIAL IS MODERATE. THIS SOIL IS NOT FLOODED. IT IS NOT PONDED. A SEASONAL ZONE OF WATER SATURATION IS AT 27 INCHES DURING JANUARY, FEBRUARY, MARCH, APRIL, MAY, NOVEMBER, DECEMBER. ORGANIC MATTER CONTENT IN THE SURFACE HORIZON IS ABOUT 2 PERCENT. NONIRRIGATED LAND CAPABILITY CLASSIFICATION IS 4E. THIS SOIL DOES NOT MEET HYDRIC CRITERIA. THE CALCIUM CARBONATE EQUIVALENT WITHIN 40 INCHES, TYPICALLY, DOES NOT EXCEED 9 PERCENT.

MAP UNIT: ELC2--ELLSWORTH SILT LOAM, 6 TO 12 PERCENT SLOPES, MODERATELY ERODED
COMPONENT: ELLSWORTH (100%)
THE ELLSWORTH COMPONENT MAKES UP 100 PERCENT OF THE MAP UNIT. SLOPES ARE 6 TO 12 PERCENT. THIS COMPONENT IS ON TILL PLAINS. THE PARENT MATERIAL CONSISTS OF TILL. DEPTH TO A ROOT RESTRICTIVE LAYER IS GREATER THAN 60 INCHES. THE NATURAL DRAINAGE CLASS IS MODERATELY WELL DRAINED. WATER MOVEMENT IN THE MOST RESTRICTIVE LAYER IS MODERATELY LOW. AVAILABLE WATER TO A DEPTH OF 60 INCHES IS MODERATE. SHRINK-SWELL POTENTIAL IS MODERATE. THIS SOIL IS NOT FLOODED. IT IS NOT PONDED. A SEASONAL ZONE OF WATER SATURATION IS AT 27 INCHES DURING JANUARY, FEBRUARY, MARCH, APRIL, MAY, NOVEMBER, DECEMBER. ORGANIC MATTER CONTENT IN THE SURFACE HORIZON IS ABOUT 2 PERCENT. NONIRRIGATED LAND CAPABILITY CLASSIFICATION IS 4E. THIS SOIL DOES NOT MEET HYDRIC CRITERIA. THE CALCIUM CARBONATE EQUIVALENT WITHIN 40 INCHES, TYPICALLY, DOES NOT EXCEED 9 PERCENT.

MAP UNIT: ELF--ELLSWORTH SILT LOAM, 25 TO 50 PERCENT SLOPES
COMPONENT: ELLSWORTH (100%)
THE ELLSWORTH COMPONENT MAKES UP 100 PERCENT OF THE MAP UNIT. SLOPES ARE 25 TO 50 PERCENT. THIS COMPONENT IS ON TILL PLAINS. THE PARENT MATERIAL CONSISTS OF TILL. DEPTH TO A ROOT RESTRICTIVE LAYER IS GREATER THAN 60 INCHES. THE NATURAL DRAINAGE CLASS IS MODERATELY WELL DRAINED. WATER MOVEMENT IN THE MOST RESTRICTIVE LAYER IS MODERATELY LOW. AVAILABLE WATER TO A DEPTH OF 60 INCHES IS HIGH. SHRINK-SWELL POTENTIAL IS MODERATE. THIS SOIL IS NOT FLOODED. IT IS NOT PONDED. A SEASONAL ZONE OF WATER SATURATION IS AT 27 INCHES DURING JANUARY, FEBRUARY, MARCH, APRIL, MAY, NOVEMBER, DECEMBER. ORGANIC MATTER CONTENT IN THE SURFACE HORIZON IS ABOUT 2 PERCENT. NONIRRIGATED LAND CAPABILITY CLASSIFICATION IS 7E. THIS SOIL DOES NOT MEET HYDRIC CRITERIA. THE CALCIUM CARBONATE EQUIVALENT WITHIN 40 INCHES, TYPICALLY, DOES NOT EXCEED 9 PERCENT.

MAP UNIT: FCA--FITCHVILLE SILT LOAM, 0 TO 2 PERCENT SLOPES
COMPONENT: FITCHVILLE (90%)
THE FITCHVILLE COMPONENT MAKES UP 90 PERCENT OF THE MAP UNIT. SLOPES ARE 0 TO 2 PERCENT. THIS COMPONENT IS ON LAKE PLAINS. THE PARENT MATERIAL CONSISTS OF GLACIOLACUSTRINE DEPOSITS. DEPTH TO A ROOT RESTRICTIVE LAYER IS GREATER THAN 60 INCHES. THE NATURAL DRAINAGE CLASS IS SOMEWHAT POORLY DRAINED. WATER MOVEMENT IN THE MOST RESTRICTIVE LAYER IS MODERATELY HIGH. AVAILABLE WATER TO A DEPTH OF 60 INCHES IS HIGH. SHRINK-SWELL POTENTIAL IS MODERATE. THIS SOIL IS NOT FLOODED. IT IS NOT PONDED. A SEASONAL ZONE OF WATER SATURATION IS AT 12 INCHES DURING JANUARY, FEBRUARY, MARCH, APRIL, MAY, NOVEMBER, DECEMBER. ORGANIC MATTER CONTENT IN THE SURFACE HORIZON IS ABOUT 2 PERCENT. NONIRRIGATED LAND CAPABILITY CLASSIFICATION IS 2W. THIS SOIL DOES NOT MEET HYDRIC CRITERIA. THE CALCIUM CARBONATE EQUIVALENT WITHIN 40 INCHES, TYPICALLY, DOES NOT EXCEED 3 PERCENT.

MAP UNIT: FCB--FITCHVILLE SILT LOAM, 2 TO 6 PERCENT SLOPES
COMPONENT: FITCHVILLE (90%)
THE FITCHVILLE COMPONENT MAKES UP 90 PERCENT OF THE MAP UNIT. SLOPES ARE 2 TO 6 PERCENT. THIS COMPONENT IS ON LAKE PLAINS. THE PARENT MATERIAL CONSISTS OF GLACIOLACUSTRINE DEPOSITS. DEPTH TO A ROOT RESTRICTIVE LAYER IS GREATER THAN 60 INCHES. THE NATURAL DRAINAGE CLASS IS SOMEWHAT POORLY DRAINED. WATER MOVEMENT IN THE MOST RESTRICTIVE LAYER IS MODERATELY HIGH. AVAILABLE WATER TO A DEPTH OF 60 INCHES IS HIGH. SHRINK-SWELL POTENTIAL IS MODERATE. THIS SOIL IS NOT FLOODED. IT IS NOT PONDED. A SEASONAL ZONE OF WATER SATURATION IS AT 12 INCHES DURING JANUARY, FEBRUARY, MARCH, APRIL, MAY, NOVEMBER, DECEMBER. ORGANIC MATTER CONTENT IN THE SURFACE HORIZON IS ABOUT 2 PERCENT. NONIRRIGATED LAND CAPABILITY CLASSIFICATION IS 2E. THIS SOIL DOES NOT MEET HYDRIC CRITERIA. THE CALCIUM CARBONATE EQUIVALENT WITHIN 40 INCHES, TYPICALLY, DOES NOT EXCEED 3 PERCENT.

MAP UNIT: FR--FRENCHTOWN SILT LOAM
COMPONENT: FRENCHTOWN (100%)
THE FRENCHTOWN COMPONENT MAKES UP 100 PERCENT OF THE MAP UNIT. SLOPES ARE 0 TO 2 PERCENT. THIS COMPONENT IS ON FLATS. THE PARENT MATERIAL CONSISTS OF TILL. DEPTH TO A ROOT RESTRICTIVE LAYER IS GREATER THAN 60 INCHES. THE NATURAL DRAINAGE CLASS IS POORLY DRAINED. WATER MOVEMENT IN THE MOST RESTRICTIVE LAYER IS MODERATELY HIGH. AVAILABLE WATER TO A DEPTH OF 60 INCHES IS LOW. SHRINK-SWELL POTENTIAL IS LOW. THIS SOIL IS NOT FLOODED. IT IS NOT PONDED. A SEASONAL ZONE OF WATER SATURATION IS AT 3 INCHES DURING JANUARY, FEBRUARY, MARCH, APRIL, MAY, OCTOBER, NOVEMBER, DECEMBER. ORGANIC MATTER CONTENT IN THE SURFACE HORIZON IS ABOUT 3 PERCENT. NONIRRIGATED LAND CAPABILITY CLASSIFICATION IS 3W. THIS SOIL MEETS HYDRIC CRITERIA.

MAP UNIT: GBB--GEEBURG SILT LOAM, 2 TO 6 PERCENT SLOPES
COMPONENT: GEEBURG (100%)
THE GEEBURG COMPONENT MAKES UP 100 PERCENT OF THE MAP UNIT. SLOPES ARE 2 TO 6 PERCENT. THIS COMPONENT IS ON TILL PLAINS. THE PARENT MATERIAL CONSISTS OF TILL. DEPTH TO A ROOT RESTRICTIVE LAYER IS GREATER THAN 60 INCHES. THE NATURAL DRAINAGE CLASS IS MODERATELY WELL DRAINED. WATER MOVEMENT IN THE MOST RESTRICTIVE LAYER IS LOW. AVAILABLE WATER TO A DEPTH OF 60 INCHES IS MODERATE. SHRINK-SWELL POTENTIAL IS HIGH. THIS SOIL IS NOT FLOODED. IT IS NOT PONDED. A SEASONAL ZONE OF WATER SATURATION IS AT 27 INCHES DURING JANUARY, FEBRUARY, MARCH, APRIL, MAY, NOVEMBER, DECEMBER. ORGANIC MATTER CONTENT IN THE SURFACE HORIZON IS ABOUT 2 PERCENT. NONIRRIGATED LAND CAPABILITY CLASSIFICATION IS 3E. THIS SOIL DOES NOT MEET HYDRIC CRITERIA. THE CALCIUM CARBONATE EQUIVALENT WITHIN 40 INCHES, TYPICALLY, DOES NOT EXCEED 5 PERCENT.

MAP UNIT: GBB2--GEEBURG SILT LOAM, 2 TO 6 PERCENT SLOPES, MODERATELY ERODED
COMPONENT: GEEBURG (100%)
THE GEEBURG COMPONENT MAKES UP 100 PERCENT OF THE MAP UNIT. SLOPES ARE 2 TO 6 PERCENT. THIS COMPONENT IS ON TILL PLAINS. THE PARENT MATERIAL CONSISTS OF TILL. DEPTH TO A ROOT RESTRICTIVE LAYER IS GREATER THAN 60 INCHES. THE NATURAL DRAINAGE CLASS IS MODERATELY WELL DRAINED. WATER MOVEMENT IN THE MOST RESTRICTIVE LAYER IS LOW. AVAILABLE WATER TO A DEPTH OF 60 INCHES IS MODERATE. SHRINK-SWELL POTENTIAL IS HIGH. THIS SOIL IS NOT FLOODED. IT IS NOT PONDED. A SEASONAL ZONE OF WATER SATURATION IS AT 27 INCHES DURING JANUARY, FEBRUARY, MARCH, APRIL, MAY, NOVEMBER, DECEMBER. ORGANIC MATTER CONTENT IN THE SURFACE HORIZON IS ABOUT 2 PERCENT. NONIRRIGATED LAND CAPABILITY CLASSIFICATION IS 3E. THIS SOIL DOES NOT MEET HYDRIC CRITERIA. THE CALCIUM CARBONATE EQUIVALENT WITHIN 40 INCHES, TYPICALLY, DOES NOT EXCEED 5 PERCENT.

MAP UNIT: GBC--GEEBURG SILT LOAM, 6 TO 12 PERCENT SLOPES
COMPONENT: GEEBURG (95%)
THE GEEBURG COMPONENT MAKES UP 95 PERCENT OF THE MAP UNIT. SLOPES ARE 6 TO 12 PERCENT. THIS COMPONENT IS ON TILL PLAINS. THE PARENT MATERIAL CONSISTS OF TILL. DEPTH TO A ROOT RESTRICTIVE LAYER IS GREATER THAN 60 INCHES. THE NATURAL DRAINAGE CLASS IS MODERATELY WELL DRAINED. WATER MOVEMENT IN THE MOST RESTRICTIVE LAYER IS LOW. AVAILABLE WATER TO A DEPTH OF 60 INCHES IS MODERATE. SHRINK-SWELL POTENTIAL IS HIGH. THIS SOIL IS NOT FLOODED. IT IS NOT PONDED. A SEASONAL ZONE OF WATER SATURATION IS AT 27 INCHES DURING JANUARY, FEBRUARY, MARCH, APRIL, MAY, NOVEMBER, DECEMBER. ORGANIC MATTER CONTENT IN THE SURFACE HORIZON IS ABOUT 2 PERCENT. NONIRRIGATED LAND CAPABILITY CLASSIFICATION IS 4E. THIS SOIL DOES NOT MEET HYDRIC CRITERIA. THE CALCIUM CARBONATE EQUIVALENT WITHIN 40 INCHES, TYPICALLY, DOES NOT EXCEED 2 PERCENT.

MAP UNIT: GEC2--GEEBURG SILTY CLAY LOAM, 6 TO 12 PERCENT SLOPES, MODERATELY ERODED
COMPONENT: GEEBURG (100%)
THE GEEBURG COMPONENT MAKES UP 100 PERCENT OF THE MAP UNIT. SLOPES ARE 6 TO 12 PERCENT. THIS COMPONENT IS ON TILL PLAINS. THE PARENT MATERIAL CONSISTS OF TILL. DEPTH TO A ROOT RESTRICTIVE LAYER IS GREATER THAN 60 INCHES. THE NATURAL DRAINAGE CLASS IS MODERATELY WELL DRAINED. WATER MOVEMENT IN THE MOST RESTRICTIVE LAYER IS LOW. AVAILABLE WATER TO A DEPTH OF 60 INCHES IS MODERATE. SHRINK-SWELL POTENTIAL IS HIGH. THIS SOIL IS NOT FLOODED. IT IS NOT PONDED. A SEASONAL ZONE OF WATER SATURATION IS AT 27 INCHES DURING JANUARY, FEBRUARY, MARCH, APRIL, MAY, NOVEMBER, DECEMBER. ORGANIC MATTER CONTENT IN THE SURFACE HORIZON IS ABOUT 1 PERCENT. NONIRRIGATED LAND CAPABILITY CLASSIFICATION IS 4E. THIS SOIL DOES NOT MEET HYDRIC CRITERIA. THE CALCIUM CARBONATE EQUIVALENT WITHIN 40 INCHES, TYPICALLY, DOES NOT EXCEED 2 PERCENT.

MAP UNIT: GED2--GEEBURG SILTY CLAY LOAM, 12 TO 18 PERCENT SLOPES, MODERATELY ERODED
COMPONENT: GEEBURG (100%)
THE GEEBURG COMPONENT MAKES UP 100 PERCENT OF THE MAP UNIT. SLOPES ARE 12 TO 18 PERCENT. THIS COMPONENT IS ON TILL PLAINS. THE PARENT MATERIAL CONSISTS OF TILL. DEPTH TO A ROOT RESTRICTIVE LAYER IS GREATER THAN 60 INCHES. THE NATURAL DRAINAGE CLASS IS MODERATELY WELL DRAINED. WATER MOVEMENT IN THE MOST RESTRICTIVE LAYER IS LOW. AVAILABLE WATER TO A DEPTH OF 60 INCHES IS MODERATE. SHRINK-SWELL POTENTIAL IS HIGH. THIS SOIL IS NOT FLOODED. IT IS NOT PONDED. A SEASONAL ZONE OF WATER SATURATION IS AT 27 INCHES DURING JANUARY, FEBRUARY, MARCH, APRIL, MAY, NOVEMBER, DECEMBER. ORGANIC MATTER CONTENT IN THE SURFACE HORIZON IS ABOUT 2 PERCENT. NONIRRIGATED LAND CAPABILITY CLASSIFICATION IS 6E. THIS SOIL DOES NOT MEET HYDRIC CRITERIA. THE CALCIUM CARBONATE EQUIVALENT WITHIN 40 INCHES, TYPICALLY, DOES NOT EXCEED 2 PERCENT.

MAP UNIT: GEE2--GEEBURG SILTY CLAY LOAM, 18 TO 25 PERCENT SLOPES, MODERATELY ERODED
COMPONENT: GEEBURG (90%)
THE GEEBURG COMPONENT MAKES UP 90 PERCENT OF THE MAP UNIT. SLOPES ARE 18 TO 25 PERCENT. THIS COMPONENT IS ON TILL PLAINS. THE PARENT MATERIAL CONSISTS OF TILL. DEPTH TO A ROOT RESTRICTIVE LAYER IS GREATER THAN 60 INCHES. THE NATURAL DRAINAGE CLASS IS MODERATELY WELL DRAINED. WATER MOVEMENT IN THE MOST RESTRICTIVE LAYER IS LOW. AVAILABLE WATER TO A DEPTH OF 60 INCHES IS MODERATE. SHRINK-SWELL POTENTIAL IS HIGH. THIS SOIL IS NOT FLOODED. IT IS NOT PONDED. A SEASONAL ZONE OF WATER SATURATION IS AT 27 INCHES DURING JANUARY, FEBRUARY, MARCH, APRIL, MAY, NOVEMBER, DECEMBER. ORGANIC MATTER CONTENT IN THE SURFACE HORIZON IS ABOUT 2 PERCENT. NONIRRIGATED LAND CAPABILITY CLASSIFICATION IS 7E. THIS SOIL DOES NOT MEET HYDRIC CRITERIA. THE CALCIUM CARBONATE EQUIVALENT WITHIN 40 INCHES, TYPICALLY, DOES NOT EXCEED 2 PERCENT.

MAP UNIT: GFC2--GLENFORD SILT LOAM, 6 TO 12 PERCENT SLOPES, MODERATELY ERODED
COMPONENT: GLENFORD (100%)
THE GLENFORD COMPONENT MAKES UP 100 PERCENT OF THE MAP UNIT. SLOPES ARE 6 TO 12 PERCENT. THIS COMPONENT IS ON TERRACES. THE PARENT MATERIAL CONSISTS OF GLACIOLACUSTRINE DEPOSITS. DEPTH TO A ROOT RESTRICTIVE LAYER IS GREATER THAN 60 INCHES. THE NATURAL DRAINAGE CLASS IS MODERATELY WELL DRAINED. WATER MOVEMENT IN THE MOST RESTRICTIVE LAYER IS MODERATELY HIGH. AVAILABLE WATER TO A DEPTH OF 60 INCHES IS VERY HIGH. SHRINK-SWELL POTENTIAL IS MODERATE. THIS SOIL IS NOT FLOODED. IT IS NOT PONDED. A SEASONAL ZONE OF WATER SATURATION IS AT 27 INCHES DURING JANUARY, FEBRUARY, MARCH, APRIL, MAY, NOVEMBER, DECEMBER. ORGANIC MATTER CONTENT IN THE SURFACE HORIZON IS ABOUT 2 PERCENT. NONIRRIGATED LAND CAPABILITY CLASSIFICATION IS 3E. THIS SOIL DOES NOT MEET HYDRIC CRITERIA.

MAP UNIT: JTB--JIMTOWN LOAM, 2 TO 6 PERCENT SLOPES
COMPONENT: JIMTOWN (100%)
THE JIMTOWN COMPONENT MAKES UP 100 PERCENT OF THE MAP UNIT. SLOPES ARE 2 TO 6 PERCENT. THIS COMPONENT IS ON TERRACES. THE PARENT MATERIAL CONSISTS OF OUTWASH. DEPTH TO A ROOT RESTRICTIVE LAYER IS GREATER THAN 60 INCHES. THE NATURAL DRAINAGE CLASS IS SOMEWHAT POORLY DRAINED. WATER MOVEMENT IN THE MOST RESTRICTIVE LAYER IS MODERATELY HIGH. AVAILABLE WATER TO A DEPTH OF 60 INCHES IS MODERATE. SHRINK SWELL POTENTIAL IS LOW. THIS SOIL IS NOT FLOODED. IT IS NOT PONDED. A SEASONAL ZONE OF WATER SATURATION IS AT 12 INCHES DURING JANUARY, FEBRUARY, MARCH, APRIL, MAY, DECEMBER. ORGANIC MATTER CONTENT IN THE SURFACE HORIZON IS ABOUT 2 PERCENT. NONIRRIGATED LAND CAPABILITY CLASSIFICATION IS 2E. THIS SOIL DOES NOT MEET HYDRIC CRITERIA. THE CALCIUM CARBONATE EQUIVALENT WITHIN 40 INCHES, TYPICALLY, DOES NOT EXCEED 5 PERCENT.

MAP UNIT: JUB--JIMTOWN LOAM, TILL SUBSTRATUM, 2 TO 6 PERCENT SLOPES
COMPONENT: JIMTOWN (85%)
THE JIMTOWN COMPONENT MAKES UP 85 PERCENT OF THE MAP UNIT. SLOPES ARE 2 TO 6 PERCENT. THIS COMPONENT IS ON TERRACES. THE PARENT MATERIAL CONSISTS OF OUTWASH. DEPTH TO A ROOT RESTRICTIVE LAYER IS GREATER THAN 60 INCHES. THE NATURAL DRAINAGE CLASS IS SOMEWHAT POORLY DRAINED. WATER MOVEMENT IN THE MOST RESTRICTIVE LAYER IS MODERATELY HIGH. AVAILABLE WATER TO A DEPTH OF 60 INCHES IS MODERATE. SHRINK-SWELL POTENTIAL IS LOW. THIS SOIL IS NOT FLOODED. IT IS NOT PONDED. A SEASONAL ZONE OF WATER SATURATION IS AT 12 INCHES DURING JANUARY, FEBRUARY, MARCH, APRIL, MAY, DECEMBER. ORGANIC MATTER CONTENT IN THE SURFACE HORIZON IS ABOUT 2 PERCENT. NONIRRIGATED LAND CAPABILITY CLASSIFICATION IS 2E. THIS SOIL DOES NOT MEET HYDRIC CRITERIA. THE CALCIUM CARBONATE EQUIVALENT WITHIN 40 INCHES, TYPICALLY, DOES NOT EXCEED 5 PERCENT.

MAP UNIT: LB--LOBDELL LOAM
COMPONENT: LOBDELL (95%)
THE LOBDELL COMPONENT MAKES UP 95 PERCENT OF THE MAP UNIT. SLOPES ARE 0 TO 2 PERCENT. THIS COMPONENT IS ON FLOOD PLAINS. THE PARENT MATERIAL CONSISTS OF ALLUVIUM. DEPTH TO A ROOT RESTRICTIVE LAYER IS GREATER THAN 60 INCHES. THE NATURAL DRAINAGE CLASS IS MODERATELY WELL DRAINED. WATER MOVEMENT IN THE MOST RESTRICTIVE LAYER IS MODERATELY HIGH. AVAILABLE WATER TO A DEPTH OF 60 INCHES IS MODERATE. SHRINK-SWELL POTENTIAL IS LOW. THIS SOIL IS OCCASIONALLY FLOODED. IT IS NOT PONDED. A SEASONAL ZONE OF WATER SATURATION IS AT 30 INCHES DURING JANUARY, FEBRUARY, MARCH, APRIL, DECEMBER. ORGANIC MATTER CONTENT IN THE SURFACE HORIZON IS ABOUT 2 PERCENT. NONIRRIGATED LAND CAPABILITY CLASSIFICATION IS 2W. THIS SOIL DOES NOT MEET HYDRIC CRITERIA.

MAP UNIT: LC--LORAIN SILTY CLAY LOAM
COMPONENT: LORAIN (100%)
THE LORAIN COMPONENT MAKES UP 100 PERCENT OF THE MAP UNIT. SLOPES ARE 0 TO 2 PERCENT. THIS COMPONENT IS ON DEPRESSIONS. THE PARENT MATERIAL CONSISTS OF GLACIOLACUSTRINE DEPOSITS. DEPTH TO A ROOT RESTRICTIVE LAYER IS GREATER THAN 60 INCHES. THE NATURAL DRAINAGE CLASS IS VERY POORLY DRAINED. WATER MOVEMENT IN THE MOST RESTRICTIVE LAYER IS LOW. AVAILABLE WATER TO A DEPTH OF 60 INCHES IS HIGH. SHRINK-SWELL POTENTIAL IS HIGH. THIS SOIL IS NOT FLOODED. IT IS OCCASIONALLY PONDED. A SEASONAL ZONE OF WATER SATURATION IS AT 3 INCHES DURING JANUARY, FEBRUARY, MARCH, APRIL, NOVEMBER, DECEMBER. ORGANIC MATTER CONTENT IN THE SURFACE HORIZON IS ABOUT 6 PERCENT. NONIRRIGATED LAND CAPABILITY CLASSIFICATION IS 3W. THIS SOIL MEETS HYDRIC CRITERIA. THE CALCIUM CARBONATE EQUIVALENT WITHIN 40 INCHES, TYPICALLY, DOES NOT EXCEED 3 PERCENT.

MAP UNIT: LDB--LOUDONVILLE LOAM, 2 TO 6 PERCENT SLOPES
COMPONENT: LOUDONVILLE (85%)
THE LOUDONVILLE COMPONENT MAKES UP 85 PERCENT OF THE MAP UNIT. SLOPES ARE 2 TO 6 PERCENT. THIS COMPONENT IS ON HILLS. THE PARENT MATERIAL CONSISTS OF TILL OVER RESIDUUM WEATHERED FROM SANDSTONE. DEPTH TO A ROOT RESTRICTIVE LAYER, BEDROCK (LITHIC), IS 30 TO 42 INCHES. THE NATURAL DRAINAGE CLASS IS WELL DRAINED. WATER MOVEMENT IN THE MOST RESTRICTIVE LAYER IS MODERATELY HIGH. AVAILABLE WATER TO A DEPTH OF 60 INCHES IS LOW. SHRINK-SWELL POTENTIAL IS LOW. THIS SOIL IS NOT FLOODED. IT IS NOT PONDED. THERE IS NO ZONE OF WATER SATURATION WITHIN A DEPTH OF 72 INCHES. ORGANIC MATTER CONTENT IN THE SURFACE HORIZON IS ABOUT 2 PERCENT. NONIRRIGATED LAND CAPABILITY CLASSIFICATION IS 2E. THIS SOIL DOES NOT MEET HYDRIC CRITERIA.

MAP UNIT: LDC2--LOUDONVILLE LOAM, 6 TO 12 PERCENT SLOPES, MODERATELY ERODED
COMPONENT: LOUDONVILLE (85%)
THE LOUDONVILLE COMPONENT MAKES UP 85 PERCENT OF THE MAP UNIT. SLOPES ARE 6 TO 12 PERCENT. THIS COMPONENT IS ON HILLS. THE PARENT MATERIAL CONSISTS OF TILL OVER RESIDUUM WEATHERED FROM SANDSTONE. DEPTH TO A ROOT RESTRICTIVE LAYER, BEDROCK (LITHIC), IS 30 TO 42 INCHES. THE NATURAL DRAINAGE CLASS IS WELL DRAINED. WATER MOVEMENT IN THE MOST RESTRICTIVE LAYER IS MODERATELY HIGH. AVAILABLE WATER TO A DEPTH OF 60 INCHES IS LOW. SHRINK-SWELL POTENTIAL IS LOW. THIS SOIL IS NOT FLOODED. IT IS NOT PONDED. THERE IS NO ZONE OF WATER SATURATION WITHIN A DEPTH OF 72 INCHES. ORGANIC MATTER CONTENT IN THE SURFACE HORIZON IS ABOUT 2 PERCENT. NONIRRIGATED LAND CAPABILITY CLASSIFICATION IS 3E. THIS SOIL DOES NOT MEET HYDRIC CRITERIA.

MAP UNIT: LDD2--LOUDONVILLE LOAM, 12 TO 18 PERCENT SLOPES, MODERATELY ERODED
COMPONENT: LOUDONVILLE (90%)
THE LOUDONVILLE COMPONENT MAKES UP 90 PERCENT OF THE MAP UNIT. SLOPES ARE 12 TO 18 PERCENT. THIS COMPONENT IS ON HILLS. THE PARENT MATERIAL CONSISTS OF TILL OVER RESIDUUM WEATHERED FROM SANDSTONE. DEPTH TO A ROOT RESTRICTIVE LAYER, BEDROCK (LITHIC), IS 30 TO 42 INCHES. THE NATURAL DRAINAGE CLASS IS WELL DRAINED. WATER MOVEMENT IN THE MOST RESTRICTIVE LAYER IS MODERATELY HIGH. AVAILABLE WATER TO A DEPTH OF 60 INCHES IS LOW. SHRINK-SWELL POTENTIAL IS LOW. THIS SOIL IS NOT FLOODED. IT IS NOT PONDED. THERE IS NO ZONE OF WATER SATURATION WITHIN A DEPTH OF 72 INCHES. ORGANIC MATTER CONTENT IN THE SURFACE HORIZON IS ABOUT 2 PERCENT. NONIRRIGATED LAND CAPABILITY CLASSIFICATION IS 4E. THIS SOIL DOES NOT MEET HYDRIC CRITERIA.

MAP UNIT: LDE2--LOUDONVILLE LOAM, 18 TO 25 PERCENT SLOPES, MODERATELY ERODED
COMPONENT: LOUDONVILLE (85%)
THE LOUDONVILLE COMPONENT MAKES UP 85 PERCENT OF THE MAP UNIT. SLOPES ARE 18 TO 25 PERCENT. THIS COMPONENT IS ON HILLS. THE PARENT MATERIAL CONSISTS OF TILL OVER RESIDUUM WEATHERED FROM SANDSTONE. DEPTH TO A ROOT RESTRICTIVE LAYER, BEDROCK (LITHIC), IS 30 TO 42 INCHES. THE NATURAL DRAINAGE CLASS IS WELL DRAINED. WATER MOVEMENT IN THE MOST RESTRICTIVE LAYER IS MODERATELY HIGH. AVAILABLE WATER TO A DEPTH OF 60 INCHES IS LOW. SHRINK-SWELL POTENTIAL IS LOW. THIS SOIL IS NOT FLOODED. IT IS NOT PONDED. THERE IS NO ZONE OF WATER SATURATION WITHIN A DEPTH OF 72 INCHES. ORGANIC MATTER CONTENT IN THE SURFACE HORIZON IS ABOUT 2 PERCENT. NONIRRIGATED LAND CAPABILITY CLASSIFICATION IS 6E. THIS SOIL DOES NOT MEET HYDRIC CRITERIA.

MAP UNIT: LS--LURAY SILT LOAM
COMPONENT: LURAY (100%)
THE LURAY COMPONENT MAKES UP 100 PERCENT OF THE MAP UNIT. SLOPES ARE 0 TO 2 PERCENT. THIS COMPONENT IS ON DEPRESSIONS. THE PARENT MATERIAL CONSISTS OF LACUSTRINE DEPOSITS. DEPTH TO A ROOT RESTRICTIVE LAYER IS GREATER THAN 60 INCHES. THE NATURAL DRAINAGE CLASS IS VERY POORLY DRAINED. WATER MOVEMENT IN THE MOST RESTRICTIVE LAYER IS MODERATELY HIGH. AVAILABLE WATER TO A DEPTH OF 60 INCHES IS HIGH. SHRINK-SWELL POTENTIAL IS MODERATE. THIS SOIL IS NOT FLOODED. IT IS OCCASIONALLY PONDED. A SEASONAL ZONE OF WATER SATURATION IS AT 3 INCHES DURING JANUARY, FEBRUARY, MARCH, APRIL, MAY, JUNE, JULY, NOVEMBER, DECEMBER. ORGANIC MATTER CONTENT IN THE SURFACE HORIZON IS ABOUT 6 PERCENT. NONIRRIGATED LAND CAPABILITY CLASSIFICATION IS 2W. THIS SOIL MEETS HYDRIC CRITERIA.

MAP UNIT: LY--LURAY SILTY CLAY LOAM
COMPONENT: LURAY (100%)
THE LURAY COMPONENT MAKES UP 100 PERCENT OF THE MAP UNIT. SLOPES ARE 0 TO 2 PERCENT. THIS COMPONENT IS ON DEPRESSIONS. THE PARENT MATERIAL CONSISTS OF LACUSTRINE DEPOSITS. DEPTH TO A ROOT RESTRICTIVE LAYER IS GREATER THAN 60 INCHES. THE NATURAL DRAINAGE CLASS IS VERY POORLY DRAINED. WATER MOVEMENT IN THE MOST RESTRICTIVE LAYER IS MODERATELY HIGH. AVAILABLE WATER TO A DEPTH OF 60 INCHES IS HIGH. SHRINK-SWELL POTENTIAL IS MODERATE. THIS SOIL IS NOT FLOODED. IT IS OCCASIONALLY PONDED. A SEASONAL ZONE OF WATER SATURATION IS AT 3 INCHES DURING JANUARY, FEBRUARY, MARCH, APRIL, MAY, JUNE, JULY, NOVEMBER, DECEMBER. ORGANIC MATTER CONTENT IN THE SURFACE HORIZON IS ABOUT 6 PERCENT. NONIRRIGATED LAND CAPABILITY CLASSIFICATION IS 2W. THIS SOIL MEETS HYDRIC CRITERIA.

STV
Douglassville, PA Houston, TX Baltimore, MD Williamsport, PA

THE LOCATION OF THE PIPELINE FACILITIES AS SHOWN HEREON MUST BE CONSIDERED AS APPROXIMATE ONLY. BEFORE DIGGING OR FOR AN EXACT LOCATION PLEASE CONTACT YOUR STATES UNDERGROUND UTILITY LOCATION SERVICE.

ENGINEERING RECORD	
DRAWN BY	RFT
CHECKED BY	CDA
APPROVED BY	BJB
DATE	XYZ
SCALE	AS NOTED

OLD DRAWING NO.

REV.	DATE	APP#	DESCRIPTION	APPROVAL

Sunoco Logistics Partners L.P.

12-INCH MOGADORE TO VANPORT
ALLEGHENY ACCESS PIPELINE PROJECT
EROSION AND SEDIMENTATION
CONTROL NOTES

PORTAGE, MAHONING AND COLUMBIANA COUNTIES, OHIO

DWG. NO. 38-15486-OH-815

REV. NO. 0

SOILS ENCOUNTERED WITHIN MAHONING COUNTY, OH, CONTINUED

MAP UNIT: MGB--MAHONING SILT LOAM, 2 TO 6 PERCENT SLOPES
COMPONENT: MAHONING (100%)
THE MAHONING COMPONENT MAKES UP 100 PERCENT OF THE MAP UNIT. SLOPES ARE 2 TO 6 PERCENT. THIS COMPONENT IS ON TILL PLAINS. THE PARENT MATERIAL CONSISTS OF TILL. DEPTH TO A ROOT RESTRICTIVE LAYER IS GREATER THAN 60 INCHES. THE NATURAL DRAINAGE CLASS IS SOMEWHAT POORLY DRAINED. WATER MOVEMENT IN THE MOST RESTRICTIVE LAYER IS MODERATELY LOW. AVAILABLE WATER TO A DEPTH OF 60 INCHES IS MODERATE. SHRINK-SWELL POTENTIAL IS MODERATE. THIS SOIL IS NOT FLOODED. IT IS NOT PONDED. A SEASONAL ZONE OF WATER SATURATION IS AT 12 INCHES DURING JANUARY, FEBRUARY, MARCH, APRIL, MAY, JUNE, NOVEMBER, DECEMBER. ORGANIC MATTER CONTENT IN THE SURFACE HORIZON IS ABOUT 3 PERCENT. NONIRRIGATED LAND CAPABILITY CLASSIFICATION IS 3E. THIS SOIL DOES NOT MEET HYDRIC CRITERIA. THE CALCIUM CARBONATE EQUIVALENT WITHIN 40 INCHES, TYPICALLY, DOES NOT EXCEED 9 PERCENT.

MAP UNIT: MN--MARENGO SILTY CLAY LOAM
COMPONENT: MARENGO (100%)
THE MARENGO COMPONENT MAKES UP 100 PERCENT OF THE MAP UNIT. SLOPES ARE 0 TO 2 PERCENT. THIS COMPONENT IS ON FLATS. THE PARENT MATERIAL CONSISTS OF TILL. DEPTH TO A ROOT RESTRICTIVE LAYER IS GREATER THAN 60 INCHES. THE NATURAL DRAINAGE CLASS IS VERY POORLY DRAINED. WATER MOVEMENT IN THE MOST RESTRICTIVE LAYER IS MODERATELY HIGH. AVAILABLE WATER TO A DEPTH OF 60 INCHES IS VERY HIGH. SHRINK-SWELL POTENTIAL IS MODERATE. THIS SOIL IS NOT FLOODED. IT IS OCCASIONALLY PONDED. A SEASONAL ZONE OF WATER SATURATION IS AT 3 INCHES DURING JANUARY, FEBRUARY, MARCH, APRIL, MAY, JUNE, NOVEMBER, DECEMBER. ORGANIC MATTER CONTENT IN THE SURFACE HORIZON IS ABOUT 6 PERCENT. NONIRRIGATED LAND CAPABILITY CLASSIFICATION IS 2W. THIS SOIL MEETS HYDRIC CRITERIA.

MAP UNIT: MSD2--MUSKINGUM CHANNERY SILT LOAM, 12 TO 18 PERCENT SLOPES, MODERATELY ERODED
COMPONENT: MUSKINGUM (100%)
THE MUSKINGUM COMPONENT MAKES UP 100 PERCENT OF THE MAP UNIT. SLOPES ARE 12 TO 18 PERCENT. THIS COMPONENT IS ON HILLS. THE PARENT MATERIAL CONSISTS OF RESIDUUM. DEPTH TO A ROOT RESTRICTIVE LAYER, BEDROCK (PARALITHIC), IS 18 TO 36 INCHES. THE NATURAL DRAINAGE CLASS IS WELL DRAINED. WATER MOVEMENT IN THE MOST RESTRICTIVE LAYER IS MODERATELY HIGH. AVAILABLE WATER TO A DEPTH OF 60 INCHES IS VERY LOW. SHRINK-SWELL POTENTIAL IS LOW. THIS SOIL IS NOT FLOODED. IT IS NOT PONDED. THERE IS NO ZONE OF WATER SATURATION WITHIN A DEPTH OF 72 INCHES. ORGANIC MATTER CONTENT IN THE SURFACE HORIZON IS ABOUT 2 PERCENT. NONIRRIGATED LAND CAPABILITY CLASSIFICATION IS 4E. THIS SOIL DOES NOT MEET HYDRIC CRITERIA.

MAP UNIT: MSE2--MUSKINGUM CHANNERY SILT LOAM, 18 TO 25 PERCENT SLOPES, MODERATELY ERODED
COMPONENT: MUSKINGUM (95%)
THE MUSKINGUM COMPONENT MAKES UP 95 PERCENT OF THE MAP UNIT. SLOPES ARE 18 TO 25 PERCENT. THIS COMPONENT IS ON HILLS. THE PARENT MATERIAL CONSISTS OF RESIDUUM. DEPTH TO A ROOT RESTRICTIVE LAYER, BEDROCK (PARALITHIC), IS 18 TO 36 INCHES. THE NATURAL DRAINAGE CLASS IS WELL DRAINED. WATER MOVEMENT IN THE MOST RESTRICTIVE LAYER IS MODERATELY HIGH. AVAILABLE WATER TO A DEPTH OF 60 INCHES IS VERY LOW. SHRINK-SWELL POTENTIAL IS LOW. THIS SOIL IS NOT FLOODED. IT IS NOT PONDED. THERE IS NO ZONE OF WATER SATURATION WITHIN A DEPTH OF 72 INCHES. ORGANIC MATTER CONTENT IN THE SURFACE HORIZON IS ABOUT 2 PERCENT. NONIRRIGATED LAND CAPABILITY CLASSIFICATION IS 4E. THIS SOIL DOES NOT MEET HYDRIC CRITERIA.

MAP UNIT: OV--ORRVILLE SILT LOAM
COMPONENT: ORRVILLE (85%)
THE ORRVILLE COMPONENT MAKES UP 85 PERCENT OF THE MAP UNIT. SLOPES ARE 0 TO 2 PERCENT. THIS COMPONENT IS ON FLOOD PLAINS. THE PARENT MATERIAL CONSISTS OF ALLUVIUM. DEPTH TO A ROOT RESTRICTIVE LAYER IS GREATER THAN 60 INCHES. THE NATURAL DRAINAGE CLASS IS SOMEWHAT POORLY DRAINED. WATER MOVEMENT IN THE MOST RESTRICTIVE LAYER IS MODERATELY HIGH. AVAILABLE WATER TO A DEPTH OF 60 INCHES IS HIGH. SHRINK-SWELL POTENTIAL IS LOW. THIS SOIL IS OCCASIONALLY FLOODED. IT IS NOT PONDED. A SEASONAL ZONE OF WATER SATURATION IS AT 12 INCHES DURING JANUARY, FEBRUARY, MARCH, APRIL, MAY, NOVEMBER, DECEMBER. ORGANIC MATTER CONTENT IN THE SURFACE HORIZON IS ABOUT 3 PERCENT. NONIRRIGATED LAND CAPABILITY CLASSIFICATION IS 2W. THIS SOIL DOES NOT MEET HYDRIC CRITERIA.

MAP UNIT: PA--PAPAKATING SILT LOAM
COMPONENT: PAPAKATING (95%)
THE PAPAKATING COMPONENT MAKES UP 95 PERCENT OF THE MAP UNIT. SLOPES ARE 0 TO 2 PERCENT. THIS COMPONENT IS ON FLOOD PLAINS. THE PARENT MATERIAL CONSISTS OF ALLUVIUM. DEPTH TO A ROOT RESTRICTIVE LAYER IS GREATER THAN 60 INCHES. THE NATURAL DRAINAGE CLASS IS VERY POORLY DRAINED. WATER MOVEMENT IN THE MOST RESTRICTIVE LAYER IS MODERATELY HIGH. AVAILABLE WATER TO A DEPTH OF 60 INCHES IS MODERATE. SHRINK-SWELL POTENTIAL IS MODERATE. THIS SOIL IS FREQUENTLY FLOODED. IT IS NOT PONDED. A SEASONAL ZONE OF WATER SATURATION IS AT 3 INCHES DURING JANUARY, FEBRUARY, MARCH, APRIL, MAY, JUNE, NOVEMBER, DECEMBER. ORGANIC MATTER CONTENT IN THE SURFACE HORIZON IS ABOUT 4 PERCENT. NONIRRIGATED LAND CAPABILITY CLASSIFICATION IS 3W. THIS SOIL MEETS HYDRIC CRITERIA. THE CALCIUM CARBONATE EQUIVALENT WITHIN 40 INCHES, TYPICALLY, DOES NOT EXCEED 2 PERCENT.

MAP UNIT: PC--PAPAKATING SILTY CLAY LOAM
COMPONENT: PAPAKATING (95%)
THE PAPAKATING COMPONENT MAKES UP 95 PERCENT OF THE MAP UNIT. SLOPES ARE 0 TO 2 PERCENT. THIS COMPONENT IS ON FLOOD PLAINS. THE PARENT MATERIAL CONSISTS OF ALLUVIUM. DEPTH TO A ROOT RESTRICTIVE LAYER IS GREATER THAN 60 INCHES. THE NATURAL DRAINAGE CLASS IS VERY POORLY DRAINED. WATER MOVEMENT IN THE MOST RESTRICTIVE LAYER IS MODERATELY HIGH. AVAILABLE WATER TO A DEPTH OF 60 INCHES IS MODERATE. SHRINK-SWELL POTENTIAL IS MODERATE. THIS SOIL IS FREQUENTLY FLOODED. IT IS NOT PONDED. A SEASONAL ZONE OF WATER SATURATION IS AT 3 INCHES DURING JANUARY, FEBRUARY, MARCH, APRIL, MAY, JUNE, NOVEMBER, DECEMBER. ORGANIC MATTER CONTENT IN THE SURFACE HORIZON IS ABOUT 4 PERCENT. NONIRRIGATED LAND CAPABILITY CLASSIFICATION IS 3W. THIS SOIL MEETS HYDRIC CRITERIA. THE CALCIUM CARBONATE EQUIVALENT WITHIN 40 INCHES, TYPICALLY, DOES NOT EXCEED 2 PERCENT.

MAP UNIT: RAB--RAVENNA SILT LOAM, 2 TO 6 PERCENT SLOPES
COMPONENT: RAVENNA (95%)
THE RAVENNA COMPONENT MAKES UP 95 PERCENT OF THE MAP UNIT. SLOPES ARE 2 TO 6 PERCENT. THIS COMPONENT IS ON TILL PLAINS. THE PARENT MATERIAL CONSISTS OF TILL. DEPTH TO A ROOT RESTRICTIVE LAYER, FRAGIPAN, IS 15 TO 24 INCHES. THE NATURAL DRAINAGE CLASS IS SOMEWHAT POORLY DRAINED. WATER MOVEMENT IN THE MOST RESTRICTIVE LAYER IS MODERATELY HIGH. AVAILABLE WATER TO A DEPTH OF 60 INCHES IS LOW. SHRINK-SWELL POTENTIAL IS LOW. THIS SOIL IS NOT FLOODED. IT IS NOT PONDED. A SEASONAL ZONE OF WATER SATURATION IS AT 12 INCHES DURING JANUARY, FEBRUARY, MARCH, APRIL, MAY, JUNE, NOVEMBER, DECEMBER. ORGANIC MATTER CONTENT IN THE SURFACE HORIZON IS ABOUT 2 PERCENT. NONIRRIGATED LAND CAPABILITY CLASSIFICATION IS 2E. THIS SOIL DOES NOT MEET HYDRIC CRITERIA. THE CALCIUM CARBONATE EQUIVALENT WITHIN 40 INCHES, TYPICALLY, DOES NOT EXCEED 3 PERCENT.

MAP UNIT: REA--RAVENNA SILT LOAM, 0 TO 2 PERCENT SLOPES
COMPONENT: RAVENNA (90%)
THE RAVENNA COMPONENT MAKES UP 90 PERCENT OF THE MAP UNIT. SLOPES ARE 0 TO 2 PERCENT. THIS COMPONENT IS ON TILL PLAINS. THE PARENT MATERIAL CONSISTS OF TILL. DEPTH TO A ROOT RESTRICTIVE LAYER IS GREATER THAN 60 INCHES. THE NATURAL DRAINAGE CLASS IS SOMEWHAT POORLY DRAINED. WATER MOVEMENT IN THE MOST RESTRICTIVE LAYER IS MODERATELY HIGH. AVAILABLE WATER TO A DEPTH OF 60 INCHES IS LOW. SHRINK-SWELL POTENTIAL IS LOW. THIS SOIL IS NOT FLOODED. IT IS NOT PONDED. A SEASONAL ZONE OF WATER SATURATION IS AT 12 INCHES DURING JANUARY, FEBRUARY, MARCH, APRIL, MAY, JUNE, NOVEMBER, DECEMBER. ORGANIC MATTER CONTENT IN THE SURFACE HORIZON IS ABOUT 2 PERCENT. NONIRRIGATED LAND CAPABILITY CLASSIFICATION IS 2W. THIS SOIL DOES NOT MEET HYDRIC CRITERIA.

MAP UNIT: REB--RAVENNA SILT LOAM, 2 TO 6 PERCENT SLOPES
COMPONENT: RAVENNA (100%)
THE RAVENNA COMPONENT MAKES UP 100 PERCENT OF THE MAP UNIT. SLOPES ARE 2 TO 6 PERCENT. THIS COMPONENT IS ON TILL PLAINS. THE PARENT MATERIAL CONSISTS OF TILL. DEPTH TO A ROOT RESTRICTIVE LAYER IS GREATER THAN 60 INCHES. THE NATURAL DRAINAGE CLASS IS SOMEWHAT POORLY DRAINED. WATER MOVEMENT IN THE MOST RESTRICTIVE LAYER IS MODERATELY HIGH. AVAILABLE WATER TO A DEPTH OF 60 INCHES IS LOW. SHRINK-SWELL POTENTIAL IS LOW. THIS SOIL IS NOT FLOODED. IT IS NOT PONDED. A SEASONAL ZONE OF WATER SATURATION IS AT 12 INCHES DURING JANUARY, FEBRUARY, MARCH, APRIL, MAY, JUNE, NOVEMBER, DECEMBER. ORGANIC MATTER CONTENT IN THE SURFACE HORIZON IS ABOUT 2 PERCENT. NONIRRIGATED LAND CAPABILITY CLASSIFICATION IS 2E. THIS SOIL DOES NOT MEET HYDRIC CRITERIA.

MAP UNIT: RSB--RITTMAN SILT LOAM, 2 TO 6 PERCENT SLOPES
COMPONENT: RITTMAN (100%)
THE RITTMAN COMPONENT MAKES UP 100 PERCENT OF THE MAP UNIT. SLOPES ARE 2 TO 6 PERCENT. THIS COMPONENT IS ON TILL PLAINS. THE PARENT MATERIAL CONSISTS OF TILL. DEPTH TO A ROOT RESTRICTIVE LAYER IS GREATER THAN 60 INCHES. THE NATURAL DRAINAGE CLASS IS MODERATELY WELL DRAINED. WATER MOVEMENT IN THE MOST RESTRICTIVE LAYER IS MODERATELY HIGH. AVAILABLE WATER TO A DEPTH OF 60 INCHES IS LOW. SHRINK-SWELL POTENTIAL IS MODERATE. THIS SOIL IS NOT FLOODED. IT IS NOT PONDED. A SEASONAL ZONE OF WATER SATURATION IS AT 27 INCHES DURING JANUARY, FEBRUARY, MARCH, APRIL, MAY, NOVEMBER, DECEMBER. ORGANIC MATTER CONTENT IN THE SURFACE HORIZON IS ABOUT 2 PERCENT. NONIRRIGATED LAND CAPABILITY CLASSIFICATION IS 2E. THIS SOIL DOES NOT MEET HYDRIC CRITERIA.

MAP UNIT: RSC--RITTMAN SILT LOAM, 6 TO 12 PERCENT SLOPES
COMPONENT: RITTMAN (100%)
THE RITTMAN COMPONENT MAKES UP 100 PERCENT OF THE MAP UNIT. SLOPES ARE 6 TO 12 PERCENT. THIS COMPONENT IS ON TILL PLAINS. THE PARENT MATERIAL CONSISTS OF TILL. DEPTH TO A ROOT RESTRICTIVE LAYER, FRAGIPAN, IS 15 TO 28 INCHES. THE NATURAL DRAINAGE CLASS IS MODERATELY WELL DRAINED. WATER MOVEMENT IN THE MOST RESTRICTIVE LAYER IS MODERATELY LOW. AVAILABLE WATER TO A DEPTH OF 60 INCHES IS LOW. SHRINK-SWELL POTENTIAL IS MODERATE. THIS SOIL IS NOT FLOODED. IT IS NOT PONDED. A SEASONAL ZONE OF WATER SATURATION IS AT 27 INCHES DURING JANUARY, FEBRUARY, MARCH, APRIL, MAY, NOVEMBER, DECEMBER. ORGANIC MATTER CONTENT IN THE SURFACE HORIZON IS ABOUT 2 PERCENT. NONIRRIGATED LAND CAPABILITY CLASSIFICATION IS 3E. THIS SOIL DOES NOT MEET HYDRIC CRITERIA. THE CALCIUM CARBONATE EQUIVALENT WITHIN 40 INCHES, TYPICALLY, DOES NOT EXCEED 4

MAP UNIT: RSC2--RITTMAN SILT LOAM, 6 TO 12 PERCENT SLOPES, MODERATELY ERODED
COMPONENT: RITTMAN (100%)
THE RITTMAN COMPONENT MAKES UP 100 PERCENT OF THE MAP UNIT. SLOPES ARE 6 TO 12 PERCENT. THIS COMPONENT IS ON TILL PLAINS. THE PARENT MATERIAL CONSISTS OF TILL. DEPTH TO A ROOT RESTRICTIVE LAYER, FRAGIPAN, IS 15 TO 28 INCHES. THE NATURAL DRAINAGE CLASS IS MODERATELY WELL DRAINED. WATER MOVEMENT IN THE MOST RESTRICTIVE LAYER IS MODERATELY LOW. AVAILABLE WATER TO A DEPTH OF 60 INCHES IS LOW. SHRINK-SWELL POTENTIAL IS MODERATE. THIS SOIL IS NOT FLOODED. IT IS NOT PONDED. A SEASONAL ZONE OF WATER SATURATION IS AT 27 INCHES DURING JANUARY, FEBRUARY, MARCH, APRIL, MAY, NOVEMBER, DECEMBER. ORGANIC MATTER CONTENT IN THE SURFACE HORIZON IS ABOUT 2 PERCENT. NONIRRIGATED LAND CAPABILITY CLASSIFICATION IS 3E. THIS SOIL DOES NOT MEET HYDRIC CRITERIA. THE CALCIUM CARBONATE EQUIVALENT WITHIN 40 INCHES, TYPICALLY, DOES NOT EXCEED 4 PERCENT.

MAP UNIT: SB--SEBRING SILT LOAM
COMPONENT: SEBRING (100%)
THE SEBRING COMPONENT MAKES UP 100 PERCENT OF THE MAP UNIT. SLOPES ARE 0 TO 2 PERCENT. THIS COMPONENT IS ON TERRACES. THE PARENT MATERIAL CONSISTS OF GLACIOLACUSTRINE DEPOSITS. DEPTH TO A ROOT RESTRICTIVE LAYER IS GREATER THAN 60 INCHES. THE NATURAL DRAINAGE CLASS IS POORLY DRAINED. WATER MOVEMENT IN THE MOST RESTRICTIVE LAYER IS MODERATELY HIGH. AVAILABLE WATER TO A DEPTH OF 60 INCHES IS HIGH. SHRINK-SWELL POTENTIAL IS MODERATE. THIS SOIL IS NOT FLOODED. IT IS NOT PONDED. A SEASONAL ZONE OF WATER SATURATION IS AT 3 INCHES DURING JANUARY, FEBRUARY, MARCH, APRIL, MAY, JUNE, NOVEMBER, DECEMBER. ORGANIC MATTER CONTENT IN THE SURFACE HORIZON IS ABOUT 4 PERCENT. NONIRRIGATED LAND CAPABILITY CLASSIFICATION IS 3W. THIS SOIL MEETS HYDRIC CRITERIA.

MAP UNIT: SE--SEBRING SILT LOAM, TILL SUBSTRATUM
COMPONENT: SEBRING (100%)
THE SEBRING COMPONENT MAKES UP 100 PERCENT OF THE MAP UNIT. SLOPES ARE 0 TO 2 PERCENT. THIS COMPONENT IS ON GLACIAL LAKES (RELICT). THE PARENT MATERIAL CONSISTS OF GLACIOLACUSTRINE DEPOSITS. DEPTH TO A ROOT RESTRICTIVE LAYER IS GREATER THAN 60 INCHES. THE NATURAL DRAINAGE CLASS IS POORLY DRAINED. WATER MOVEMENT IN THE MOST RESTRICTIVE LAYER IS MODERATELY HIGH. AVAILABLE WATER TO A DEPTH OF 60 INCHES IS MODERATE. SHRINKSWELL POTENTIAL IS LOW. THIS SOIL IS NOT FLOODED. IT IS FREQUENTLY PONDED. A SEASONAL ZONE OF WATER SATURATION IS AT 3 INCHES DURING JANUARY, FEBRUARY, MARCH, APRIL, MAY, NOVEMBER, DECEMBER. ORGANIC MATTER CONTENT IN THE SURFACE HORIZON IS ABOUT 4 PERCENT. NONIRRIGATED LAND CAPABILITY CLASSIFICATION IS 3W. THIS SOIL MEETS HYDRIC CRITERIA. THE CALCIUM CARBONATE EQUIVALENT WITHIN 40 INCHES, TYPICALLY, DOES NOT EXCEED 3 PERCENT.

MAP UNIT: TRA--TRUMBULL SILT LOAM, 0 TO 2 PERCENT SLOPES
COMPONENT: TRUMBULL (100%)
THE TRUMBULL COMPONENT MAKES UP 100 PERCENT OF THE MAP UNIT. SLOPES ARE 0 TO 2 PERCENT. THIS COMPONENT IS ON DEPRESSIONS. THE PARENT MATERIAL CONSISTS OF TILL. DEPTH TO A ROOT RESTRICTIVE LAYER IS GREATER THAN 60 INCHES. THE NATURAL DRAINAGE CLASS IS POORLY DRAINED. WATER MOVEMENT IN THE MOST RESTRICTIVE LAYER IS LOW. AVAILABLE WATER TO A DEPTH OF 60 INCHES IS MODERATE. SHRINK-SWELL POTENTIAL IS MODERATE. THIS SOIL IS NOT FLOODED. IT IS NOT PONDED. A SEASONAL ZONE OF WATER SATURATION IS AT 0 INCHES DURING JANUARY, FEBRUARY, MARCH, APRIL, MAY, JUNE, NOVEMBER, DECEMBER. ORGANIC MATTER CONTENT IN THE SURFACE HORIZON IS ABOUT 4 PERCENT. NONIRRIGATED LAND CAPABILITY CLASSIFICATION IS 4W. THIS SOIL MEETS HYDRIC CRITERIA.

MAP UNIT: TRB--TRUMBULL SILT LOAM, 2 TO 6 PERCENT SLOPES
COMPONENT: TRUMBULL (100%)
THE TRUMBULL COMPONENT MAKES UP 100 PERCENT OF THE MAP UNIT. SLOPES ARE 2 TO 6 PERCENT. THIS COMPONENT IS ON TILL PLAINS. THE PARENT MATERIAL CONSISTS OF TILL. DEPTH TO A ROOT RESTRICTIVE LAYER IS GREATER THAN 60 INCHES. THE NATURAL DRAINAGE CLASS IS POORLY DRAINED. WATER MOVEMENT IN THE MOST RESTRICTIVE LAYER IS LOW. AVAILABLE WATER TO A DEPTH OF 60 INCHES IS HIGH. SHRINK-SWELL POTENTIAL IS MODERATE. THIS SOIL IS NOT FLOODED. IT IS NOT PONDED. A SEASONAL ZONE OF WATER SATURATION IS AT 3 INCHES DURING JANUARY, FEBRUARY, MARCH, APRIL, MAY, JUNE, NOVEMBER, DECEMBER. ORGANIC MATTER CONTENT IN THE SURFACE HORIZON IS ABOUT 4 PERCENT. NONIRRIGATED LAND CAPABILITY CLASSIFICATION IS 4E. THIS SOIL MEETS HYDRIC CRITERIA. THE CALCIUM CARBONATE EQUIVALENT WITHIN 40 INCHES, TYPICALLY, DOES NOT EXCEED 3 PERCENT.

MAP UNIT: UA--UDORTHENTS
COMPONENT: UDORTHENTS (100%)
THE UDORTHENTS COMPONENT MAKES UP 100 PERCENT OF THE MAP UNIT. SLOPES ARE DEPTH TO A ROOT RESTRICTIVE LAYER IS GREATER THAN 60 INCHES. AVAILABLE WATER TO A DEPTH OF 60 INCHES IS VERY LOW. SHRINK-SWELL POTENTIAL IS LOW. THIS SOIL IS NOT FLOODED. IT IS NOT PONDED. THERE IS NO ZONE OF WATER SATURATION WITHIN A DEPTH OF 72 INCHES. THIS SOIL DOES NOT MEET HYDRIC CRITERIA.

MAP UNIT: USB--UDORTHENTS, SHALE AND SANDSTONE MATERIALS, UNDULATING
COMPONENT: UDORTHENTS (100%)
THE UDORTHENTS COMPONENT MAKES UP 100 PERCENT OF THE MAP UNIT. SLOPES ARE 2 TO 6 PERCENT. DEPTH TO A ROOT RESTRICTIVE LAYER IS GREATER THAN 60 INCHES. AVAILABLE WATER TO A DEPTH OF 60 INCHES IS VERY LOW. SHRINK-SWELL POTENTIAL IS LOW. THIS SOIL IS NOT FLOODED. IT IS NOT PONDED. THERE IS NO ZONE OF WATER SATURATION WITHIN A DEPTH OF 72 INCHES. NONIRRIGATED LAND CAPABILITY CLASSIFICATION IS 6S. THIS SOIL DOES NOT MEET HYDRIC CRITERIA.

MAP UNIT: USC--UDORTHENTS, SHALE AND SANDSTONE MATERIALS, ROLLING
COMPONENT: UDORTHENTS (100%)
THE UDORTHENTS COMPONENT MAKES UP 100 PERCENT OF THE MAP UNIT. SLOPES ARE 6 TO 12 PERCENT. DEPTH TO A ROOT RESTRICTIVE LAYER IS GREATER THAN 60 INCHES. AVAILABLE WATER TO A DEPTH OF 60 INCHES IS VERY LOW. SHRINK-SWELL POTENTIAL IS LOW. THIS SOIL IS NOT FLOODED. IT IS NOT PONDED. THERE IS NO ZONE OF WATER SATURATION WITHIN A DEPTH OF 72 INCHES. NONIRRIGATED LAND CAPABILITY CLASSIFICATION IS 6S. THIS SOIL DOES NOT MEET HYDRIC CRITERIA.

MAP UNIT: USF--UDORTHENTS, SHALE AND SANDSTONE MATERIALS, STEEP
COMPONENT: UDORTHENTS (100%)
THE UDORTHENTS COMPONENT MAKES UP 100 PERCENT OF THE MAP UNIT. SLOPES ARE DEPTH TO A ROOT RESTRICTIVE LAYER IS GREATER THAN 60 INCHES. AVAILABLE WATER TO A DEPTH OF 60 INCHES IS VERY LOW. SHRINK-SWELL POTENTIAL IS LOW. THIS SOIL IS NOT FLOODED. IT IS NOT PONDED. THERE IS NO ZONE OF WATER SATURATION WITHIN A DEPTH OF 72 INCHES. NONIRRIGATED LAND CAPABILITY CLASSIFICATION IS 7S. THIS SOIL DOES NOT MEET HYDRIC CRITERIA.

MAP UNIT: UTB--UDORTHENTS, LOAMY TILL MATERIALS, UNDULATING
COMPONENT: UDORTHENTS (100%)
THE UDORTHENTS COMPONENT MAKES UP 100 PERCENT OF THE MAP UNIT. SLOPES ARE 2 TO 6 PERCENT. DEPTH TO A ROOT RESTRICTIVE LAYER IS GREATER THAN 60 INCHES. AVAILABLE WATER TO A DEPTH OF 60 INCHES IS VERY LOW. SHRINK-SWELL POTENTIAL IS LOW. THIS SOIL IS NOT FLOODED. IT IS NOT PONDED. THERE IS NO ZONE OF WATER SATURATION WITHIN A DEPTH OF 72 INCHES. NONIRRIGATED LAND CAPABILITY CLASSIFICATION IS 6S. THIS SOIL DOES NOT MEET HYDRIC CRITERIA.

MAP UNIT: UTC--UDORTHENTS, LOAMY TILL MATERIALS, ROLLING
COMPONENT: UDORTHENTS (100%)
THE UDORTHENTS COMPONENT MAKES UP 100 PERCENT OF THE MAP UNIT. SLOPES ARE 6 TO 12 PERCENT. DEPTH TO A ROOT RESTRICTIVE LAYER IS GREATER THAN 60 INCHES. AVAILABLE WATER TO A DEPTH OF 60 INCHES IS VERY LOW. SHRINK-SWELL POTENTIAL IS LOW. THIS SOIL IS NOT FLOODED. IT IS NOT PONDED. THERE IS NO ZONE OF WATER SATURATION WITHIN A DEPTH OF 72 INCHES. NONIRRIGATED LAND CAPABILITY CLASSIFICATION IS 6S. THIS SOIL DOES NOT MEET HYDRIC CRITERIA.

MAP UNIT: WAA--WADSWORTH SILT LOAM, 0 TO 2 PERCENT SLOPES
COMPONENT: WADSWORTH (90%)
THE WADSWORTH COMPONENT MAKES UP 90 PERCENT OF THE MAP UNIT. SLOPES ARE 0 TO 2 PERCENT. THIS COMPONENT IS ON TILL PLAINS. THE PARENT MATERIAL CONSISTS OF TILL. DEPTH TO A ROOT RESTRICTIVE LAYER, FRAGIPAN, IS 24 TO 28 INCHES. THE NATURAL DRAINAGE CLASS IS SOMEWHAT POORLY DRAINED. WATER MOVEMENT IN THE MOST RESTRICTIVE LAYER IS MODERATELY HIGH. AVAILABLE WATER TO A DEPTH OF 60 INCHES IS LOW. SHRINK-SWELL POTENTIAL IS MODERATE. THIS SOIL IS NOT FLOODED. IT IS NOT PONDED. A SEASONAL ZONE OF WATER SATURATION IS AT 12 INCHES DURING JANUARY, FEBRUARY, MARCH, APRIL, MAY, JUNE, NOVEMBER, DECEMBER. ORGANIC MATTER CONTENT IN THE SURFACE HORIZON IS ABOUT 3 PERCENT. NONIRRIGATED LAND CAPABILITY CLASSIFICATION IS 3W. THIS SOIL DOES NOT MEET HYDRIC CRITERIA.

MAP UNIT: WAB--WADSWORTH SILT LOAM, 2 TO 6 PERCENT SLOPES
COMPONENT: WADSWORTH (95%)
THE WADSWORTH COMPONENT MAKES UP 95 PERCENT OF THE MAP UNIT. SLOPES ARE 2 TO 6 PERCENT. THIS COMPONENT IS ON TILL PLAINS. THE PARENT MATERIAL CONSISTS OF TILL. DEPTH TO A ROOT RESTRICTIVE LAYER, FRAGIPAN, IS 24 TO 28 INCHES. THE NATURAL DRAINAGE CLASS IS SOMEWHAT POORLY DRAINED. WATER MOVEMENT IN THE MOST RESTRICTIVE LAYER IS MODERATELY HIGH. AVAILABLE WATER TO A DEPTH OF 60 INCHES IS LOW. SHRINK-SWELL POTENTIAL IS MODERATE. THIS SOIL IS NOT FLOODED. IT IS NOT PONDED. A SEASONAL ZONE OF WATER SATURATION IS AT 12 INCHES DURING JANUARY, FEBRUARY, MARCH, APRIL, MAY, JUNE, NOVEMBER, DECEMBER. ORGANIC MATTER CONTENT IN THE SURFACE HORIZON IS ABOUT 3 PERCENT. NONIRRIGATED LAND CAPABILITY CLASSIFICATION IS 3E. THIS SOIL DOES NOT MEET HYDRIC CRITERIA.

MAP UNIT: WC--WALLKILL SILT LOAM
COMPONENT: WALLKILL (100%)
THE WALLKILL COMPONENT MAKES UP 100 PERCENT OF THE MAP UNIT. SLOPES ARE 0 TO 2 PERCENT. THIS COMPONENT IS ON DEPRESSIONS. THE PARENT MATERIAL CONSISTS OF ALLUVIUM OVER HERBACEOUS ORGANIC MATERIAL. DEPTH TO A ROOT RESTRICTIVE LAYER IS GREATER THAN 60 INCHES. THE NATURAL DRAINAGE CLASS IS POORLY DRAINED. WATER MOVEMENT IN THE MOST RESTRICTIVE LAYER IS MODERATELY HIGH. AVAILABLE WATER TO A DEPTH OF 60 INCHES IS VERY HIGH. SHRINK-SWELL POTENTIAL IS LOW. THIS SOIL IS FREQUENTLY FLOODED. IT IS FREQUENTLY PONDED. A SEASONAL ZONE OF WATER SATURATION IS AT 0 INCHES DURING JANUARY, FEBRUARY, MARCH, APRIL, MAY, JUNE, SEPTEMBER, OCTOBER, NOVEMBER, DECEMBER. ORGANIC MATTER CONTENT IN THE SURFACE HORIZON IS ABOUT 8 PERCENT. NONIRRIGATED LAND CAPABILITY CLASSIFICATION IS 3W. THIS SOIL MEETS HYDRIC CRITERIA.

MAP UNIT: WOA--WICK SILT LOAM, 0 TO 2 PERCENT SLOPES, FREQUENTLY FLOODED
COMPONENT: WICK (90%)
THE WICK COMPONENT MAKES UP 90 PERCENT OF THE MAP UNIT. SLOPES ARE 0 TO 2 PERCENT. THIS COMPONENT IS ON FLOOD PLAINS. THE PARENT MATERIAL CONSISTS OF SILTY ALLUVIUM. DEPTH TO A ROOT RESTRICTIVE LAYER IS GREATER THAN 60 INCHES. THE NATURAL DRAINAGE CLASS IS VERY POORLY DRAINED. WATER MOVEMENT IN THE MOST RESTRICTIVE LAYER IS MODERATELY HIGH. AVAILABLE WATER TO A DEPTH OF 60 INCHES IS HIGH. SHRINK-SWELL POTENTIAL IS MODERATE. THIS SOIL IS FREQUENTLY FLOODED. IT IS NOT PONDED. A SEASONAL ZONE OF WATER SATURATION IS AT 0 INCHES DURING JANUARY, FEBRUARY, MARCH, APRIL, MAY, JUNE, NOVEMBER, DECEMBER. ORGANIC MATTER CONTENT IN THE SURFACE HORIZON IS ABOUT 3 PERCENT. NONIRRIGATED LAND CAPABILITY CLASSIFICATION IS 5W. THIS SOIL MEETS HYDRIC CRITERIA.

MAP UNIT: WSB--WOOSTER SILT LOAM, 2 TO 6 PERCENT SLOPES
COMPONENT: WOOSTER (90%)
THE WOOSTER COMPONENT MAKES UP 90 PERCENT OF THE MAP UNIT. SLOPES ARE 2 TO 6 PERCENT. THIS COMPONENT IS ON TILL PLAINS. THE PARENT MATERIAL CONSISTS OF TILL. DEPTH TO A ROOT RESTRICTIVE LAYER, FRAGIPAN, IS 20 TO 30 INCHES. THE NATURAL DRAINAGE CLASS IS WELL DRAINED. WATER MOVEMENT IN THE MOST RESTRICTIVE LAYER IS MODERATELY HIGH. AVAILABLE WATER TO A DEPTH OF 60 INCHES IS LOW. SHRINK-SWELL POTENTIAL IS LOW. THIS SOIL IS NOT FLOODED. IT IS NOT PONDED. A SEASONAL ZONE OF WATER SATURATION IS AT 48 INCHES DURING FEBRUARY, MARCH, APRIL. ORGANIC MATTER CONTENT IN THE SURFACE HORIZON IS ABOUT 2 PERCENT. NONIRRIGATED LAND CAPABILITY CLASSIFICATION IS 2E. THIS SOIL DOES NOT MEET HYDRIC CRITERIA. THE CALCIUM CARBONATE EQUIVALENT WITHIN 40 INCHES, TYPICALLY, DOES NOT EXCEED 3 PERCENT.

MAP UNIT: WSC2--WOOSTER SILT LOAM, 6 TO 12 PERCENT SLOPES, MODERATELY ERODED
COMPONENT: WOOSTER (95%)
THE WOOSTER COMPONENT MAKES UP 95 PERCENT OF THE MAP UNIT. SLOPES ARE 6 TO 12 PERCENT. THIS COMPONENT IS ON TILL PLAINS. THE PARENT MATERIAL CONSISTS OF TILL. DEPTH TO A ROOT RESTRICTIVE LAYER, FRAGIPAN, IS 20 TO 30 INCHES. THE NATURAL DRAINAGE CLASS IS WELL DRAINED. WATER MOVEMENT IN THE MOST RESTRICTIVE LAYER IS MODERATELY HIGH. AVAILABLE WATER TO A DEPTH OF 60 INCHES IS LOW. SHRINK-SWELL POTENTIAL IS LOW. THIS SOIL IS NOT FLOODED. IT IS NOT PONDED. A SEASONAL ZONE OF WATER SATURATION IS AT 48 INCHES DURING FEBRUARY, MARCH, APRIL. ORGANIC MATTER CONTENT IN THE SURFACE HORIZON IS ABOUT 2 PERCENT. NONIRRIGATED LAND CAPABILITY CLASSIFICATION IS 3E. THIS SOIL DOES NOT MEET HYDRIC CRITERIA. THE CALCIUM CARBONATE EQUIVALENT WITHIN 40 INCHES, TYPICALLY, DOES NOT EXCEED 3 PERCENT.

MAP UNIT: WSD2--WOOSTER SILT LOAM, 12 TO 18 PERCENT SLOPES, MODERATELY ERODED
COMPONENT: WOOSTER (100%)
THE WOOSTER COMPONENT MAKES UP 100 PERCENT OF THE MAP UNIT. SLOPES ARE 12 TO 18 PERCENT. THIS COMPONENT IS ON TILL PLAINS. THE PARENT MATERIAL CONSISTS OF TILL. DEPTH TO A ROOT RESTRICTIVE LAYER, FRAGIPAN, IS 20 TO 30 INCHES. THE NATURAL DRAINAGE CLASS IS WELL DRAINED. WATER MOVEMENT IN THE MOST RESTRICTIVE LAYER IS MODERATELY HIGH. AVAILABLE WATER TO A DEPTH OF 60 INCHES IS LOW. SHRINK-SWELL POTENTIAL IS LOW. THIS SOIL IS NOT FLOODED. IT IS NOT PONDED. A SEASONAL ZONE OF WATER SATURATION IS AT 48 INCHES DURING FEBRUARY, MARCH, APRIL. ORGANIC MATTER CONTENT IN THE SURFACE HORIZON IS ABOUT 2 PERCENT. NONIRRIGATED LAND CAPABILITY CLASSIFICATION IS 4E. THIS SOIL DOES NOT MEET HYDRIC CRITERIA. THE CALCIUM CARBONATE EQUIVALENT WITHIN 40 INCHES, TYPICALLY, DOES NOT EXCEED 3 PERCENT.

MAP UNIT: ZEA--ZEPERNICK SILT LOAM, 0 TO 2 PERCENT SLOPES, OCCASIONALLY FLOODED
COMPONENT: ZEPERNICK (85%)
THE ZEPERNICK COMPONENT MAKES UP 85 PERCENT OF THE MAP UNIT. SLOPES ARE 0 TO 2 PERCENT. THIS COMPONENT IS ON FLOOD PLAINS. THE PARENT MATERIAL CONSISTS OF SILTY ALLUVIUM. DEPTH TO A ROOT RESTRICTIVE LAYER IS GREATER THAN 60 INCHES. THE NATURAL DRAINAGE CLASS IS SOMEWHAT POORLY DRAINED. WATER MOVEMENT IN THE MOST RESTRICTIVE LAYER IS MODERATELY HIGH. AVAILABLE WATER TO A DEPTH OF 60 INCHES IS VERY HIGH. SHRINKSWELL POTENTIAL IS MODERATE. THIS SOIL IS OCCASIONALLY FLOODED. IT IS NOT PONDED. A SEASONAL ZONE OF WATER SATURATION IS AT 10 INCHES DURING JANUARY, FEBRUARY, MARCH, APRIL, MAY, JUNE, NOVEMBER, DECEMBER. ORGANIC MATTER CONTENT IN THE SURFACE HORIZON IS ABOUT 4 PERCENT. NONIRRIGATED LAND CAPABILITY CLASSIFICATION IS 2W. THIS SOIL DOES NOT MEET HYDRIC CRITERIA.

SOILS ENCOUNTERED WITHIN COLUMBIANA COUNTY, OH

MAP UNIT: CCB--CANFIELD SILT LOAM, 2 TO 6 PERCENT SLOPES
COMPONENT: CANFIELD (90%)
THE CANFIELD COMPONENT MAKES UP 90 PERCENT OF THE MAP UNIT. SLOPES ARE 2 TO 6 PERCENT. THIS COMPONENT IS ON TILL PLAINS. THE PARENT MATERIAL CONSISTS OF LOAMY TILL. DEPTH TO A ROOT RESTRICTIVE LAYER, FRAGIPAN, IS 18 TO 30 INCHES. THE NATURAL DRAINAGE CLASS IS MODERATELY WELL DRAINED. WATER MOVEMENT IN THE MOST RESTRICTIVE LAYER IS MODERATELY LOW. AVAILABLE WATER TO A DEPTH OF 60 INCHES IS MODERATE. SHRINK-SWELL POTENTIAL IS LOW. THIS SOIL IS NOT FLOODED. IT IS NOT PONDED. A SEASONAL ZONE OF WATER SATURATION IS AT 17 INCHES DURING JANUARY, FEBRUARY, MARCH, APRIL, MAY, NOVEMBER, DECEMBER. ORGANIC MATTER CONTENT IN THE SURFACE HORIZON IS ABOUT 2 PERCENT. NONIRRIGATED LAND CAPABILITY CLASSIFICATION IS 2E. THIS SOIL DOES NOT MEET HYDRIC CRITERIA.

MAP UNIT: CCC--CANFIELD SILT LOAM, 6 TO 12 PERCENT SLOPES
COMPONENT: CANFIELD (85%)
THE CANFIELD COMPONENT MAKES UP 85 PERCENT OF THE MAP UNIT. SLOPES ARE 6 TO 12 PERCENT. THIS COMPONENT IS ON TILL PLAINS. THE PARENT MATERIAL CONSISTS OF LOAMY TILL. DEPTH TO A ROOT RESTRICTIVE LAYER, FRAGIPAN, IS 18 TO 30 INCHES. THE NATURAL DRAINAGE CLASS IS MODERATELY WELL DRAINED. WATER MOVEMENT IN THE MOST RESTRICTIVE LAYER IS MODERATELY LOW. AVAILABLE WATER TO A DEPTH OF 60 INCHES IS MODERATE. SHRINK-SWELL POTENTIAL IS LOW. THIS SOIL IS NOT FLOODED. IT IS NOT PONDED. A SEASONAL ZONE OF WATER SATURATION IS AT 18 INCHES DURING JANUARY, FEBRUARY, MARCH, APRIL, MAY, NOVEMBER, DECEMBER. ORGANIC MATTER CONTENT IN THE SURFACE HORIZON IS ABOUT 2 PERCENT. NONIRRIGATED LAND CAPABILITY CLASSIFICATION IS 3E. THIS SOIL DOES NOT MEET HYDRIC CRITERIA.

MAP UNIT: CCE--CANFIELD SILT LOAM, 20 TO 35 PERCENT SLOPES
COMPONENT: CANFIELD (80%)
THE CANFIELD COMPONENT MAKES UP 80 PERCENT OF THE MAP UNIT. SLOPES ARE 20 TO 35 PERCENT. THIS COMPONENT IS ON TILL PLAINS. THE PARENT MATERIAL CONSISTS OF LOAMY TILL. DEPTH TO A ROOT RESTRICTIVE LAYER, FRAGIPAN, IS 18 TO 30 INCHES. THE NATURAL DRAINAGE CLASS IS MODERATELY WELL DRAINED. WATER MOVEMENT IN THE MOST RESTRICTIVE LAYER IS MODERATELY LOW. AVAILABLE WATER TO A DEPTH OF 60 INCHES IS MODERATE. SHRINK-SWELL POTENTIAL IS LOW. THIS SOIL IS NOT FLOODED. IT IS NOT PONDED. A SEASONAL ZONE OF WATER SATURATION IS AT 20 INCHES DURING JANUARY, FEBRUARY, MARCH, APRIL, MAY, NOVEMBER, DECEMBER. ORGANIC MATTER CONTENT IN THE SURFACE HORIZON IS ABOUT 2 PERCENT. NONIRRIGATED LAND CAPABILITY CLASSIFICATION IS 6E. THIS SOIL DOES NOT MEET HYDRIC CRITERIA.

MAP UNIT: REB--RAVENNA SILT LOAM, 2 TO 6 PERCENT SLOPES
COMPONENT: RAVENNA (90%)
THE RAVENNA COMPONENT MAKES UP 90 PERCENT OF THE MAP UNIT. SLOPES ARE 2 TO 6 PERCENT. THIS COMPONENT IS ON TILL PLAINS. THE PARENT MATERIAL CONSISTS OF LOAMY TILL. DEPTH TO A ROOT RESTRICTIVE LAYER, FRAGIPAN, IS 14 TO 30 INCHES. THE NATURAL DRAINAGE CLASS IS SOMEWHAT POORLY DRAINED. WATER MOVEMENT IN THE MOST RESTRICTIVE LAYER IS MODERATELY LOW. AVAILABLE WATER TO A DEPTH OF 60 INCHES IS MODERATE. SHRINK-SWELL POTENTIAL IS LOW. THIS SOIL IS NOT FLOODED. IT IS NOT PONDED. A SEASONAL ZONE OF WATER SATURATION IS AT 10 INCHES DURING JANUARY, FEBRUARY, MARCH, APRIL, MAY, JUNE, NOVEMBER, DECEMBER. ORGANIC MATTER CONTENT IN THE SURFACE HORIZON IS ABOUT 2 PERCENT. NONIRRIGATED LAND CAPABILITY CLASSIFICATION IS 2E. THIS SOIL DOES NOT MEET HYDRIC CRITERIA.

MAP UNIT: VCA--VALLEY-LORAIN SILT LOAMS, 0 TO 2 PERCENT SLOPES
COMPONENT: VALLEY (45%)
THE VALLEY COMPONENT MAKES UP 45 PERCENT OF THE MAP UNIT. SLOPES ARE 0 TO 2 PERCENT. THIS COMPONENT IS ON TILL PLAINS. THE PARENT MATERIAL CONSISTS OF GLACIOLACUSTRINE DEPOSITS OVER TILL. DEPTH TO A ROOT RESTRICTIVE LAYER IS GREATER THAN 60 INCHES. THE NATURAL DRAINAGE CLASS IS POORLY DRAINED. WATER MOVEMENT IN THE MOST RESTRICTIVE LAYER IS LOW. AVAILABLE WATER TO A DEPTH OF 60 INCHES IS MODERATE. SHRINK-SWELL POTENTIAL IS MODERATE. THIS SOIL IS NOT FLOODED. IT IS FREQUENTLY PONDED. A SEASONAL ZONE OF WATER SATURATION IS AT 0 INCHES DURING JANUARY, FEBRUARY, MARCH, APRIL, MAY, JUNE, NOVEMBER, DECEMBER. ORGANIC MATTER CONTENT IN THE SURFACE HORIZON IS ABOUT 7 PERCENT. NONIRRIGATED LAND CAPABILITY CLASSIFICATION IS 3W. THIS SOIL MEETS HYDRIC CRITERIA.
COMPONENT: LORAIN (35%)
THE LORAIN COMPONENT MAKES UP 35 PERCENT OF THE MAP UNIT. SLOPES ARE 0 TO 2 PERCENT. THIS COMPONENT IS ON TILL PLAINS. THE PARENT MATERIAL CONSISTS OF SILTY AND CLAYEY GLACIOLACUSTRINE DEPOSITS. DEPTH TO A ROOT RESTRICTIVE LAYER IS GREATER THAN 60 INCHES. THE NATURAL DRAINAGE CLASS IS VERY POORLY DRAINED. WATER MOVEMENT IN THE MOST RESTRICTIVE LAYER IS LOW. AVAILABLE WATER TO A DEPTH OF 60 INCHES IS MODERATE. SHRINKSWELL POTENTIAL IS HIGH. THIS SOIL IS NOT FLOODED. IT IS FREQUENTLY PONDED. A SEASONAL ZONE OF WATER SATURATION IS AT 0 INCHES DURING JANUARY, FEBRUARY, MARCH, APRIL, MAY, JUNE, OCTOBER, NOVEMBER, DECEMBER. ORGANIC MATTER CONTENT IN THE SURFACE HORIZON IS ABOUT 6 PERCENT. NONIRRIGATED LAND CAPABILITY CLASSIFICATION IS 3W. THIS SOIL MEETS HYDRIC CRITERIA.

MAP UNIT: WOA--WICK SILT LOAM, 0 TO 2 PERCENT SLOPES, FREQUENTLY FLOODED
COMPONENT: WICK (90%)
THE WICK COMPONENT MAKES UP 90 PERCENT OF THE MAP UNIT. SLOPES ARE 0 TO 2 PERCENT. THIS COMPONENT IS ON FLOOD PLAINS. THE PARENT MATERIAL CONSISTS OF SILTY ALLUVIUM. DEPTH TO A ROOT RESTRICTIVE LAYER IS GREATER THAN 60 INCHES. THE NATURAL DRAINAGE CLASS IS VERY POORLY DRAINED. WATER MOVEMENT IN THE MOST RESTRICTIVE LAYER IS MODERATELY HIGH. AVAILABLE WATER TO A DEPTH OF 60 INCHES IS HIGH. SHRINK-SWELL POTENTIAL IS MODERATE. THIS SOIL IS FREQUENTLY FLOODED. IT IS NOT PONDED. A SEASONAL ZONE OF WATER SATURATION IS AT 0 INCHES DURING JANUARY, FEBRUARY, MARCH, APRIL, MAY, JUNE, NOVEMBER, DECEMBER. ORGANIC MATTER CONTENT IN THE SURFACE HORIZON IS ABOUT 3 PERCENT. NONIRRIGATED LAND CAPABILITY CLASSIFICATION IS 5W. THIS SOIL MEETS HYDRIC CRITERIA.

MAP UNIT: ZEA--ZEPERNICK SILT LOAM, 0 TO 2 PERCENT SLOPES, OCCASIONALLY FLOODED
COMPONENT: ZEPERNICK (85%)
THE ZEPERNICK COMPONENT MAKES UP 85 PERCENT OF THE MAP UNIT. SLOPES ARE 0 TO 2 PERCENT. THIS COMPONENT IS ON FLOOD PLAINS. THE PARENT MATERIAL CONSISTS OF SILTY ALLUVIUM. DEPTH TO A ROOT RESTRICTIVE LAYER IS GREATER THAN 60 INCHES. THE NATURAL DRAINAGE CLASS IS SOMEWHAT POORLY DRAINED. WATER MOVEMENT IN THE MOST RESTRICTIVE LAYER IS MODERATELY HIGH. AVAILABLE WATER TO A DEPTH OF 60 INCHES IS VERY HIGH. SHRINKSWELL POTENTIAL IS MODERATE. THIS SOIL IS OCCASIONALLY FLOODED. IT IS NOT PONDED. A SEASONAL ZONE OF WATER SATURATION IS AT 10 INCHES DURING JANUARY, FEBRUARY, MARCH, APRIL, MAY, JUNE, NOVEMBER, DECEMBER. ORGANIC MATTER CONTENT IN THE SURFACE HORIZON IS ABOUT 4 PERCENT. NONIRRIGATED LAND CAPABILITY CLASSIFICATION IS 2W. THIS SOIL DOES NOT MEET HYDRIC CRITERIA.

STV
Douglassville, PA Houston, TX Baltimore, MD Williamsport, PA

THE LOCATION OF THE PIPELINE FACILITIES AS SHOWN HEREON MUST BE CONSIDERED AS APPROXIMATE ONLY. BEFORE DIGGING OR FOR AN EXACT LOCATION PLEASE CONTACT YOUR STATES UNDERGROUND UTILITY LOCATION SERVICE.

ENGINEERING RECORD	
DRAWN BY	RFT
CHECKED BY	CDA
APPROVED BY	BJB
DATE	XYZ
SCALE	AS NOTED

OLD DRAWING NO.

REV.	DATE	APP#	DESCRIPTION	APPROVAL

Sunoco Logistics Partners L.P.

12-INCH MOGADORE TO VANPORT
ALLEGHENY ACCESS PIPELINE PROJECT
EROSION AND SEDIMENTATION
CONTROL NOTES

PORTAGE, MAHONING AND COLUMBIANA COUNTIES, OHIO

DWG. NO. 38-15486-OH-816

REV. NO. 0

CONSTRUCTION SEQUENCE

REMOVAL OF EXISTING GROUND COVER, INSTALLATION OF PIPELINES, AND FINAL STABILIZATION OF THE SITE WILL BE PERFORMED IN ACCORDANCE WITH SUNOCO PIPELINE CONSTRUCTION SPECIFICATIONS AND THE EROSION AND SEDIMENTATION CONTROL PLANS. THE CONSTRUCTION SEQUENCE IS INCLUDED ON THE EROSION AND SEDIMENTATION CONTROL PLANS AND IN THIS NARRATIVE.

THE CONTROL FACILITIES FOR THE SITE WORK INCLUDE SILT SOXX, SILT FENCE, DESILTING BAGS, WATER BARS, CLEAN WATER DIVERSIONS, ROCK CONSTRUCTION ENTRANCES, TRENCH PLUGS, ROCK ENERGY DISSIPATERS AND APPROPRIATE SEEDING/ REVEGETATION OF DISTURBED AREAS.

CONTRACTORS MAY STORE EQUIPMENT, MATERIALS AND CONSTRUCTION TRAILERS WITHIN THE TEMPORARY WORKSPACE. . REFER TO THE EROSION AND SEDIMENTATION CONTROL PLAN DRAWINGS (BOUND SEPARATELY), PREPARED BY STV INCORPORATED, FOR ADDITIONAL INFORMATION.

ALL CONTROL MEASURES WILL BE INSTALLED, MAINTAINED AND REMOVED IN ACCORDANCE WITH THE PROCEDURES OUTLINED IN THE "RAINWATER AND LAND DEVELOPMENT," PUBLISHED BY OHIO DEPARTMENT OF NATURAL RESOURCES, DIVISION OF SOIL AND WATER CONSERVATION AND THE OHIO ENVIRONMENTAL PROTECTION AGENCY, CONSTRUCTION SITE INSPECTION CHECKLIST.

THE OVERALL CONSTRUCTION SCHEDULE IS ESTIMATED TO BE OCTOBER 2013 TO MAY 2014. THE ANTICIPATED SEQUENCE OF CONSTRUCTION IS DESCRIBED BELOW:

PHASE I – GENERAL RIGHT-OF-WAY CLEARING MEASURES

1. AT LEAST 48 HOURS BUT NOT MORE THAN 10 WORKING DAYS (EXCLUDING WEEKENDS AND LEGAL HOLIDAYS) PRIOR TO CONSTRUCTION, THE CONTRACTOR SHALL CONTACT THE OHIO UTILITIES PROTECTION SERVICE (811 OR 1-800-362-2764) AND THE OIL AND GAS PRODUCERS UNDERGROUND PROTECTION SERVICE (800-925-0988) FOR LOCATION OF ALL UNDERGROUND UTILITIES.

2. AT LEAST 14 DAYS BEFORE STARTING ANY EARTH DISTURBANCE ACTIVITIES, THE CONTRACTOR SHALL NOTIFY THE OHIO EPA AS FOLLOWS:

   A. SENECA, HURON & ASHLAND COUNTY – NORTHWEST REGIONAL OFFICE – (419) 352-8461
   B. WAYNE, PORTAGE & MAHONING COUNTY – NORTHEAST REGIONAL OFFICE – (330) 963-1200

3. BEFORE IMPLEMENTING ANY REVISIONS TO THE APPROVED EROSION AND SEDIMENTATION CONTROL PLAN OR REVISIONS TO OTHER PLANS WHICH MAY AFFECT THE EFFECTIVENESS OF THE APPROVED E&S PLAN, THE CONTRACTOR MUST RECEIVE APPROVAL OF THE REVISIONS FROM THE DISTRICT OFFICE, OHIO ENVIRONMENTAL PROTECTION AGENCY AS NOTED ABOVE.

4. BEFORE DISPOSING OF SOIL OR RECEIVING BORROW FOR THE SITE, THE CONTRACTOR MUST ASSURE THAT EACH SPOIL OR BORROW AREA HAS APPROVED EROSION AND SEDIMENTATION CONTROL PLAN, WHICH WAS DEVELOPED IN ACCORDANCE WITH OHIO EPA REGULATIONS.

5. ALL CONSTRUCTION AND DEMOLITION DEBRIS (C&DD) WASTE WILL BE DISPOSED OF IN AN OHIO EPA APPROVED C&DD LANDFILL AS REQUIRED BY OHIO REVISED CODE (ORC) 3714. THE CONTRACTOR SHALL NOT BURY, DUMP OR DISCHARGE ANY WASTES AT THE SITE.

6. REMOVE TREES ONLY (DO NOT GRUB) IN RIGHT-OF-WAY AND TEMPORARY WORKSPACE AREAS. ALL TREE MATERIAL SHALL BE REMOVED FROM WITHIN 25 FEET OF AN EXISTING STREAM BANK OR THE 100 YEAR FLOODPLAIN LINE, WHICHEVER IS GREATER. ONLY CLEAR TREES AS NECESSARY.

7. INSTALL ROCK CONSTRUCTION ENTRANCES WHERE SHOWN ON THE DRAWINGS.

8. INSTALL TEMPORARY EROSION AND SEDIMENTATION CONTROL MEASURES ALONG THE PROPOSED ROUTE.

9. GRADE AND PREPARE THE RIGHT-OF-WAY.

10. INSTALL SILTSOXX, SILT FENCE AND ALL OTHER EROSION AND SEDIMENT CONTROL PRACTICES WITHIN THE PROJECT AREA AS INDICATED ON THE DRAWINGS.

11. INSTALL WATERBARS AS SHOWN.

12. TEMPORARY SEED AND MULCH ANY DISTURBED AREA. DO NOT TEMPORARY SEED CONSTRUCTION ACCESS ROADS.

13. PERMANENTLY SEED ALL TOP SOIL STOCK PILES.

14. ALL EARTH DISTURBANCE ACTIVITIES SHALL PROCEED IN ACCORDANCE WITH THE FOLLOWING SEQUENCE. EACH STAGE SHALL BE COMPLETE IN COMPLIANCE WITH THE REGULATIONS, BEFORE ANY SUBSEQUENT STAGE IN INITIATED. CLEARING AND GRUBBING SHALL BE LIMITED ONLY TO THOSE AREAS DESCRIBED IN EACH STAGE.

PHASE II – PIPELINE CONSTRUCTION

STANDARD TRENCHING INSTALLATION

1. GRADE AND TWO-TONE RIGHT-OF-WAY AS REQUIRED.

2. PERFORM STRINGING, WELDING, COATING AND X-RAY OF PIPELINE.

3. EXCAVATE PIPELINE TRENCHES.

4. ALL TOPSOIL SHALL BE STRIPPED TO ELONGATED STOCKPILES ALONG THE EDGE OF THE LIMIT OF DISTURBANCE IN ACCORDANCE WITH THE DETAIL DRAWINGS. ADDITIONAL SUBSOIL SHALL BE STOCKPILED SEPARATELY.

5. UTILIZE DESILTING BAGS FOR DEWATERING THE TRENCH LINE, AS NEEDED. REFER TO PUMP WATER FILTER BAG DETAIL.

6. INSTALL PIPELINE WITH PIPE BEDDING AND INSTALL TRENCH PLUGS AS SHOWN ON THE PLANS.

7. BACKFILL AND COMPACT THE TRENCHES AS INDICATED ON THE TRENCH DETAIL.

8. REMOVE AND DISPOSE OF ANY EXCESS EXCAVATED MATERIALS.

9. STABILIZE DISTURBED AREAS IN ACCORDANCE WITH POST-CONSTRUCTION MEASURES.

TRENCHING WITHIN ALL STREAMS

1. STREAM CROSSINGS WILL BE PERFORMED DURING OPTIMUM DRY CONDITIONS.

2. INSTALL TIMBER MATTING FOR ACCESS.

3. GRUBBING SHALL NOT TAKE PLACE WITHIN 50-FEET FROM THE TOP OF BANK UNTIL ALL MATERIALS REQUIRED TO COMPLETE THE CROSSING ARE ON SITE AND THE PIPE IS READY FOR INSTALLATION.

4. INSTALL STREAM FLUME OR PUMP AROUND BYPASS AND ROCK ENERGY DISSIPATER.

5. PERFORM STRINGING, WELDING, COATING AND X-RAY OF PIPELINE.

6. BEGIN PIPELINE TRENCH EXCAVATION WHEN THE PIPELINE IS WITHIN 10 FEET OF THE TOP OF BANK. STOCKPILE WETLAND TOPSOIL AND SUBSOIL SEPARATELY.

7. UTILIZE DESILTING BAGS TO DEWATERING THE TRENCH LINE, AS NEEDED.

8. INSTALL PIPELINE WITH PIPE BEDDING AND INSTALL TRENCH PLUGS AS SHOWN ON THE PLANS.

9. BACKFILL AND COMPACT THE TRENCH.

10. REMOVE TIMBER MATTING STREAM CROSSING.

11. INSTALL STREAM BANK RESTORATION.

12. REMOVE AND DISPOSE OF ANY EXCESS EXCAVATED MATERIAL.

13. REMOVE STREAM FLUME OR PUMP AROUND BYPASS AND ROCK ENERGY DISSIPATER.

14. STABILIZE DISTURBED AREAS IN ACCORDANCE WITH POST CONSTRUCTION MEASURES.

TRENCHING WITHIN WETLANDS

1. INSTALL TIMBER MATTING FOR ACCESS.

2. PERFORM STRINGING, WELDING, COATING AND X-RAY OF PIPELINE.

3. EXCAVATE PIPELINE TRENCH. STOCKPILE WETLAND TOPSOIL AND SUBSOIL SEPARATELY ON GEOTEXTILE FABRIC.

4. UTILIZE DESILTING BAGS TO DEWATER THE TRENCH LINE, AS NEEDED.

5. INSTALL PIPELINE WITH PIPE BEDDING AND INSTALL TRENCH PLUGS AS SHOWN ON THE PLANS.

6. BACKFILL AND COMPACT THE TRENCH.

7. REMOVE WETLAND MATTING.

8. PERMANENTLY SEED AND MULCH DISTURBED WETLANDS IN ACCORDANCE WITH THE PLAN.

HORIZONTAL DIRECTIONAL DRILLS

1. INSTALL TIMBER MATTING TO PROTECT EXISTING UTILITIES, AS NEEDED.

2. PRIOR TO DRILL RIG SETUP, EXPOSE THE EXISTING GAS PIPELINE AND CONFIRM THE GAS PIPELINES MAINTAIN DESIGNED CLEARANCES FROM ALIGNMENT.

3. PERFORM STRINGING, WELDING, COATING, X-RAY, AND HYDROTESTING OF CARRIER PIPE TO BE INSTALLED BY HORIZONTAL DIRECTIONAL DRILL PRIOR TO PULL-BACK.

4. SET UP DIRECTIONAL DRILL RIG SITE. INSTALL DRILL MUD PIT.

5. EXCAVATE INSPECTION PIT WHERE DRILL PIPE WILL TIE INTO TRENCHED PIPE.

6. BEGIN DIRECTIONAL DRILL, MONITOR FOR SIGNS OF HYDROFRACTURE (FRAC-OUT) OF DRILLING MUD. IF A FRAC-OUT OCCURS, DRILLING WILL BE STOPPED AND THE FRAC-OUT WILL BE CONTAINED AND CLEANED UP.

7. COMPLETE PILOT HOLE. BEGIN REAMING OPERATIONS OF THE HOLE.

8. RE-CIRCULATE DRILL MUD.

9. USE DEWATERING MEASURES AS NEEDED.

10. PERFORM PIPELINE PULL-BACK, INSTALLING THE CARRIER PIPELINE.

11. INSTALL PIPELINE TIE-IN CONNECTIONS PER THE DESIGN PLANS FOLLOWING THE TRENCHED INSTALLATION PROCEDURES.

12. DISPOSE OF DRILL MUD IN AN APPROVED OFF SITE MUD DISPOSAL FACILITY.

13. BACKFILL AND COMPACT ENTRY AND EXIT PITS, REMOVE TIMBER MATS GRADE DISTURBED AREA, PERMANENTLY SEED AND MULCH THE DRILL SETUP AREA AND PULL-BACK AREA.

TESTING, PURGING, TIE-IN PROCEDURES AND CP MITIGATION

1. UPON COMPLETION OF INSTALLATION OF THE ENTIRE PROJECT, A CALIPER PIG SHALL BE RUN THROUGH THE PIPELINE AND EVALUATED.

2. PERFORM HYDROTEST OF THE ENTIRE PIPELINE IN ACCORDANCE WITH GENERAL PERMIT OHH000002, GENERAL PERMIT AUTHORIZATION TO DISCHARGE HYDROSTATIC TEST WATER. HYDROSTATIC DISCHARGE WILL BE TRUCKED OFF-SITE.

3. INSTALL PIPELINE CATHODIC PROTECTION SYSTEM.

4. STABILIZE DISTURBED AREAS IN ACCORDANCE WITH POST CONSTRUCTION MEASURES.

POST CONSTRUCTION MEASURES

1. TOPSOIL WILL BE GRADED BACK TO ORIGINAL LOCATION AND THE SITE WILL BE RETURNED TO EXISTING CONDITIONS. (WATER BARS TO REMAIN AFTER STABILIZATION IS ACHIEVED, EXCEPT IN AGRICULTURAL AREAS)

2. DOZER SHALL TRACK ALL STEEP SLOPES.

3. ALL DISTURBED AREAS SHALL BE RETURNED TO EXISTING GRADE, PERMANENTLY SEEDED AND MULCHED.

4. WATER BARS SHALL BE MAINTAINED UNTIL PERMANENT STABILIZATION IS REACHED. WATERBARS SHALL BE INSPECTED FOR WATER BUILD UP AFTER EACH RAIN EVENT. ANY WATER SHALL BE REMOVED AND WATER BAR SHALL BE REPLACED/ RESLOPED TO PREVENT FURTHER WATER BUILD UP.

5. UPON STABILIZATION, REMOVE ALL PERIMETER SILTSOXX OR SILT FENCE AND ALL OTHER EROSION CONTROL MEASURES. WATER BARS ARE TO REMAIN AFTER STABILIZATION IS ACHIEVED, EXCEPT IN AGRICULTURAL AREAS.

6. PERMANENTLY SEED AND MULCH ALL REMAINING DISTURBED AREAS.

7. ALL TEMPORARY ROCK CONSTRUCTION ENTRANCES SHALL BE REMOVED AND RESTORED.

STV

Douglassville, PA Houston, TX Baltimore, MD Williamsport, PA

THE LOCATION OF THE PIPELINE FACILITIES AS SHOWN HEREON MUST BE CONSIDERED AS APPROXIMATE ONLY. BEFORE DIGGING OR FOR AN EXACT LOCATION PLEASE CONTACT YOUR STATES UNDERGROUND UTILITY LOCATION SERVICE.

ENGINEERING RECORD	
DRAWN BY	RFT
CHECKED BY	CDA
APPROVED BY	BJB
DATE	XYZ
SCALE	AS NOTED

OLD DRAWING NO.

REV.	DATE	APP#	DESCRIPTION	APPROVAL

Sunoco Logistics Partners L.P.

12-INCH MOGADORE TO VANPORT
ALLEGHENY ACCESS PIPELINE PROJECT
EROSION AND SEDIMENTATION
NOTES

PORTAGE, MAHONING AND COLUMBIANA COUNTIES, OHIO

DWG. NO. 38-15486-OH-817

REV. NO. 0

Riprap									Erosion Control
County	Stream	Approximate Station	Velocity of 10-yr 24-hr flow in channel (ft/sec)	Riprap Type (ODOT)	Max Permissible Velocity (ft/s)	Thickness (Inches)	Filter Stone	Filter Stone Thickness (Inches)	Erosion Control Matting Type, Staple Pattern
Portage	MV-RR5	134+42	1.74	D	6.0	18	AASHTO #3	6	SC150, D
Portage	MV-RR7	157+00	2.65	D	6.0	18	AASHTO #3	6	SC150, D
Portage	MV-RR8	160+45	4.65	D	6.0	18	AASHTO #3	6	SC150, D
Portage	DS-73	244+30	6.08	D	6.0	18	AASHTO #3	6	SC150, D
Portage	MV-S1	251+25	7.65	D	6.0	18	AASHTO #3	6	SC150, D
Portage	Channel 23	265+00	4.28	D	6.0	18	AASHTO #3	6	SC150, D
Portage	Channel 24-	289+59	2.78	D	6.0	18	AASHTO #3	6	SC250, E
Portage	DS-65	307+16	7.62	C	8.0	27	AASHTO #1	6	SC150, D
Portage	CS-64	407+19	5.84	D	6.0	18	AASHTO #3	6	SC150, D
Portage	CF(W)	532+25	3.82	D	6.0	18	AASHTO #3	6	SC150, D
Portage	DS-60	667+61	10.86	A	12.0	45	AASHTO #1	6	SC250, E
Portage	DS-59	687+02	4.12	D	6.0	18	AASHTO #3	6	SC150, D
Portage	DS-59A	722+17	1.85	D	6.0	18	AASHTO #3	6	SC150, D
Portage	Channel 27	764+74	1.35	D	6.0	18	AASHTO #3	6	SC150, D
Portage	CS-56	847+73	5.36	D	6.0	18	AASHTO #3	6	SC150, D
Portage	CS-54A	951+91	3.38	D	6.0	18	AASHTO #3	6	SC150, D
Portage	CS-54	959+32	5.53	D	6.0	18	AASHTO #3	6	SC250, E
Portage	CS-52	1024+72	3.46	D	6.0	18	AASHTO #3	6	SC150, D
Portage	CS-51A	1036+33	0.99	D	6.0	18	AASHTO #3	6	SC150, D
Portage	CS-51B	1065+50	4.63	D	6.0	18	AASHTO #3	6	SC150, D
Portage	CS-50	1085+74	4.47	D	6.0	18	AASHTO #3	6	SC150, D
Portage	OEX-1	1132+69	3.76	D	6.0	18	AASHTO #3	6	SC150, D
Mahoning	DS-54	1272+20	0.93	D	6.0	18	AASHTO #3	6	SC150, D
Mahoning	DFF	1291+21	4.72	D	6.0	18	AASHTO #3	6	SC150, D
Mahoning	DS-55	1341+73	6.09	C	8.0	27	AASHTO #1	6	SC150, D
Mahoning	DS-56	1362+80	0.98	D	6.0	18	AASHTO #3	6	SC150, D
Mahoning	DS-57A	1457+15	0.88	D	6.0	18	AASHTO #3	6	SC150, D
Mahoning	OE-33	1583+78	7.49	C	8.0	27	AASHTO #1	6	SC150, D
Mahoning	OE-32	1654+03	2.55	D	6.0	18	AASHTO #3	6	SC150, D
Mahoning	OE-31	1667+43	7.73	C	8.0	27	AASHTO #1	6	SC250, E
Mahoning	OE-X4	1883+94	1.88	D	6.0	18	AASHTO #3	6	SC150, D
Mahoning	OE-27	1921+00	6.91	C	8.0	27	AASHTO #1	6	SC150, D
Mahoning	BS-24	1935+62	5.24	D	6.0	18	AASHTO #3	6	SC150, D
Mahoning	BS-23	1938+05	5.22	D	6.0	18	AASHTO #3	6	SC150, D
Mahoning	BS-22	1948+10	4.43	D	6.0	18	AASHTO #3	6	SC150, D
Mahoning	BS-21	2027+47	4.31	D	6.0	18	AASHTO #3	6	SC150, D
Mahoning	Channel 43	2072+80	4.57	D	6.0	18	AASHTO #3	6	SC250, E
Mahoning	BS-19	2276+28	5.74	D	6.0	18	AASHTO #3	6	SC150, D
Mahoning	BS-17	2330+33	7.51	C	8.0	27	AASHTO #1	6	SC250, E
Mahoning	BS-16	2346+22	8.82	B	10.0	36	AASHTO #1	6	SC250, E
Mahoning	MV-W4	2350+47	2.67	D	6.0	18	AASHTO #3	6	SC150, D
Mahoning	OE-8	2450+50	4.55	D	6.0	18	AASHTO #3	6	SC150, D
Mahoning	OE-7	2485+50	5.71	D	6.0	18	AASHTO #3	6	SC150, D
Mahoning	BS-14	2669+71	7.67	C	8.0	27	AASHTO #1	6	SC250, E

Mahoning	OE-2A	2765+94	8.15	C	8.0	27	AASHTO #1	6	SC150, D
Columbiana	OE-2	2807+91	7.94	C	8.0	27	AASHTO #1	6	SC250, E
Columbiana	OE-1	2846+29	9.38	B	10.0	36	AASHTO #1	6	SC250, E

* Rip Rap shall extend above the Depth of the Existing Water Surface Elevation as indicated. Riprap shall not exceed the top of bank.

Riprap									Erosion Control Matting
County	Stream	Approximate Station	Velocity of 10-yr 24-hr flow in channel (ft/sec)	Riprap Type (ODOT)	Max Permissible Velocity (ft/s)	Thickness (Inches)	Filter Stone	Filter Stone Thickness (Inches)	Erosion Control Matting Type, Staple Pattern
Beaver	AS-8	3334+10	7.47	R-4	9.0	18	AASHTO #3	6	SC150, D
Beaver	BS-12	3363+40	7.16	R-4	9.0	18	AASHTO #3	6	SC250, E
Beaver	BS-09	3394+80	6.56	R-4	9.0	18	AASHTO #3	6	SC250, E
Beaver	BS-06	3444+16	5.63	R-4	9.0	18	AASHTO #3	6	SC250, E
Beaver	BS-08	3445+45	5.91	R-4	9.0	18	AASHTO #3	6	SC250, E
Beaver	BS-07	3494+00	5.60	R-4	9.0	18	AASHTO #3	6	SC150, D
Beaver	BS-05A	3527+90	6.44	R-4	9.0	18	AASHTO #3	6	SC250, E
Beaver	BS-05B	3531+00	5.76	R-4	9.0	18	AASHTO #3	6	SC250, E
Beaver	AS-6	3587+72	7.93	R-4	9.0	18	AASHTO #3	6	SC250, E
Beaver	AS-5	3617+17	6.83	R-4	9.0	18	AASHTO #3	6	SC250, E
Beaver	BS-04A	3781+33	7.27	R-4	9.0	18	AASHTO #3	6	SC250, E
Beaver	BS-03	3876+28	5.53	R-4	9.0	18	AASHTO #3	6	SC150, D

* Rip Rap shall extend above the Depth of the Existing Water Surface Elevation as indicated. Riprap shall not exceed the top of bank.

Temporary Stream Crossing									
County	Stream	Approximate Location	TR-55 (2-yr 24-hr storm) Q (cfs)	Normal Depth for 2-yr (ft)	Culvert Size (inches)	Number of Barrels	Inlet Control or Outlet Control at Normal Flow	Is 2-year Storm Conveyed?	HW/D for Design Flow
Portage	MV-RR5	134+42	84.00	1.22	36	2	Inlet	Yes	1.08
Portage	MV-RR7	157+00	47.18	0.76	24	3	Inlet	Yes	1.10
Portage	MV-RR8	160+45	145.67	2.64	36	3	Inlet	Yes	1.20
Portage	DS-73	244+30	89.27	0.51	36	2	Inlet	Yes	1.13
Portage	MV-S1	251+25	61.13	1.70	24	3	Inlet	Yes	1.34
Portage	Channel 23	265+00	24.48	0.42	24	2	Inlet	Yes	0.93
Portage	Channel 24-2	289+59	21.89	0.54	18	3	Inlet	Yes	1.07
Portage	DS-65	307+16	105.19	1.03	36	2	Inlet	Yes	1.27
Portage	CS-64	407+19	131.46	2.15	36	2	Inlet	No*	1.53
Portage	CF(W)	532+25	108.00	0.98	36	2	Inlet	Yes	1.30
Portage	DS-60	667+61	218.99	1.89	36	2	Inlet	No*	2.29
Portage	DS-59	687+02	41.90	0.65	24	2	Inlet	Yes	1.38
Portage	DS-59A	722+17	4.60	0.44	15	1	Inlet	Yes	1.06
Portage	Channel 27	764+74	38.94	1.49	36	1	Inlet	Yes	1.03
Portage	CS-56	847+73	204.90	1.70	36	2	Inlet	No*	2.17
Portage	CS-54A	951+91	47.71	1.38	36	1	Inlet	Yes	1.18
Portage	CS-54	959+32	34.95	0.61	24	2	Inlet	Yes	1.19
Portage	CS-52	1024+72	182.77	1.50	36	3	Inlet	No*	1.45
Portage	CS-51A	1036+33	2.73	0.15	12	1	Inlet	Yes	1.09
Portage	CS-51B	1065+50	110.21	1.95	36	2	Inlet	Yes	1.32
Portage	CS-50	1085+74	219.09	2.13	36	3	Inlet	No*	1.70
Portage	OEX-1	1132+69	23.86	0.74	24	2	Inlet	Yes	0.92
Mahoning	DS-54	1272+20	2.16	0.21	12	1	Inlet	Yes	0.93
Mahoning	DFF	1291+21	77.16	1.48	36	2	Inlet	Yes	1.02
Mahoning	DS-55	1341+73	818.19	3.25	36	3	Inlet	No*	6.40
Mahoning	DS-56	1362+80	3.76	0.49	15	1	Inlet	Yes	0.93
Mahoning	DS-57A	1457+15	0.10	0.07	12	1	Inlet	Yes	0.17
Mahoning	OE-33	1583+78	607.53	3.76	36	3	Inlet	No*	4.70
Mahoning	OE-32	1654+03	5.64	0.24	18	1	Inlet	Yes	0.90
Mahoning	OE-31	1667+43	1635.67	5.98	36	3	Inlet	No*	10.39
Mahoning	OE-X4	1883+94	10.33	0.32	18	1	Inlet	Yes	1.55
Mahoning	OE-27	1921+00	385.19	2.82	36	3	Inlet	No*	2.89
Mahoning	BS-24	1935+62	873.21	5.05	36	3	Inlet	No*	9.70
Mahoning	BS-23	1938+05	875.42	7.61	36	3	Inlet	No*	9.84
Mahoning	BS-22	1948+10	863.51	5.37	36	3	Inlet	No*	9.77
Mahoning	BS-21	2027+47	91.20	1.37	36	2	Inlet	Yes	1.14
Mahoning	Channel 43	2072+80	12.48	0.28	24	1	Inlet	Yes	0.94
Mahoning	BS-19	2276+28	143.16	1.52	36	3	Inlet	Yes	1.18
Mahoning	BS-17	2330+33	113.92	1.77	36	2	Inlet	Yes	1.37

Mahoning	BS-16	2346+22	109.69	1.33	36	3	Inlet	Yes	0.98
Mahoning	MV-W4	2350+47	22.24	0.72	30	1	Inlet	Yes	0.96
Mahoning	OE-8	2450+50	71.27	0.89	36	2	Inlet	Yes	0.97
Mahoning	OE-7	2485+50	28.37	1.00	24	2	Inlet	Yes	1.03
Mahoning	BS-14	2669+71	788.34	4.77	36	3	Inlet	No*	9.15
Mahoning	OE-2A	2765+94	13.33	0.23	24	1	Inlet	Yes	0.99
Columbiana	OE-2	2807+91	74.43	0.94	30	3	Inlet	Yes	1.03
Columbiana	OE-1	2846+29	568.84	3.40	36	2	Inlet	No*	5.05

The Contractor may use a CMP culvert OR pump bypass stream crossing. Sandbags to be stacked at least 12-inches over crown of pipe. Construction will also be performed during optimum conditions.

*Culverts size is based on physical geometric constraints. Construction will be performed during optimum conditions.

Temporary Stream Crossing									
County	Stream	Approximate Location	TR-55 (2-yr 24-hr storm) Q (cfs)	Normal Depth for 2-yr (ft)	Culvert Size (inches)	Number of Barrels	Inlet Control or Outlet Control at Normal Flow	Is 2-year Storm Conveyed?	HW/D for Design Flow
Lawrence	AS-16	3044+50	180.53	1.60	36	3	Inlet	Yes	1.45
Lawrence	AS-14	3125+30	28.15	0.69	36	1	Inlet	Yes	0.83
Lawrence	Channel AJ	3158+42	73.92	1.13	36	2	Inlet	Yes	0.99
Beaver	AS-13	3230+15	6.44	0.14	30	1	Inlet	Yes	0.76
Beaver	AS-12	3272+95	3.61	0.18	18	1	Inlet	Yes	0.68
Beaver	AS-11	3280+20	11.72	0.28	24	1	Inlet	Yes	0.91
Beaver	AS-10	3302+90	23.71	0.48	30	1	Inlet	Yes	1.00
Beaver	AS-8	3334+10	66.93	0.86	36	2	Inlet	Yes	0.93
Beaver	BS-12	3363+40	854.00	5.74	36	3	Inlet	No*	4.29
Beaver	BS-09	3394+80	260.00	2.13	36	3	Inlet	No*	1.93
Beaver	BS-06	3444+16	20.08	0.83	24	1	Inlet	Yes	1.32
Beaver	BS-08	3445+45	130.39	2.38	36	3	Inlet	Yes	1.11
Beaver	BS-07	3494+00	46.33	0.80	30	2	Inlet	Yes	0.98
Beaver	BS-05A	3527+90	224.77	1.92	36	3	Inlet	No*	1.80
Beaver	BS-05B	3531+00	203.34	2.43	36	3	Inlet	No*	1.64
Beaver	AS-6	3587+72	335.91	2.76	36	3	Inlet	No*	1.35
Beaver	AS-5	3617+17	147.03	1.68	36	3	Inlet	No*	1.21
Beaver	BS-04A	3781+33	113.75	2.51	36	3	Inlet	Yes	1.01
Beaver	BS-03	3876+28	41.98	0.96	36	1	Inlet	Yes	1.08

The Contractor may use a CMP culvert OR pump bypass stream crossing. Sandbags to be stacked at least 12-inches over crown of pipe. Construction will also be performed during optimum conditions.

*Culverts size is based on physical geometric constraints. Construction will be performed during optimum conditions.

ATTACHMENT 3
List of Approvals

ATTACHMENT 3
LIST OF APPROVALS

7. List all approvals or certifications and denials received from other federal, interstate, state of local agencies for any structures, construction, discharge or other activities described in this application.

Issuing Agency	Type of Approval	Identification No.	Date of Application	Date of Approval	Date of Denial
Ohio EPA	401 Water Quality Certification	TBD	2/2013	TBD	
USACE Buffalo District	Preliminary JD	TBD	1/2013	TBD	
USACE Pittsburgh District	Preliminary JD	TBD	1/2013	TBD	
USACE Buffalo/ Pittsburgh Districts	Nationwide 12	TBD	2/2013		
Ohio EPA	NPDES Permit	TBD	2/2013	TBD	
Ohio EPA	Hydrostatic Discharge Permit	TBD	2/2013	TBD	
Local County Conservation Districts (Portage and Mahoning Counties)	Erosion and Sedimentation Control Plan	TBD	2/2013	TBD	

ATTACHMENT 4
Project Description